Service Manual

Tektronix

2711 & 2712
Spectrum Analyzers

070-8130-04

Warning
The servicing instructions are for use by qualified personnel only. To avoid personal injury, do not perform any servicing unless you are qualified to do so. Refer to all safety summaries prior to performing service.

CE

Copyright © Tektronix, Inc. All rights reserved.

Tektronix products are covered by U.S. and foreign patents, issued and pending. Information in this publication supercedes that in all previously published material. Specifications and price change privileges reserved.

Printed in the U.S.A.

Tektronix, Inc., P.O. Box 1000, Wilsonville, OR 97070–1000

TEKTRONIX and TEK are registered trademarks of Tektronix, Inc.

WARRANTY

Tektronix warrants that this product will be free from defects in materials and workmanship for a period of one (1) year from the date of shipment. If any such product proves defective during this warranty period, Tektronix, at its option, either will repair the defective product without charge for parts and labor, or will provide a replacement in exchange for the defective product.

In order to obtain service under this warranty, Customer must notify Tektronix of the defect before the expiration of the warranty period and make suitable arrangements for the performance of service. Customer shall be responsible for packaging and shipping the defective product to the service center designated by Tektronix, with shipping charges prepaid. Tektronix shall pay for the return of the product to Customer if the shipment is to a location within the country in which the Tektronix service center is located. Customer shall be responsible for paying all shipping charges, duties, taxes, and any other charges for products returned to any other locations.

This warranty shall not apply to any defect, failure or damage caused by improper use or improper or inadequate maintenance and care. Tektronix shall not be obligated to furnish service under this warranty a) to repair damage resulting from attempts by personnel other than Tektronix representatives to install, repair or service the product; b) to repair damage resulting from improper use or connection to incompatible equipment; or c) to service a product that has been modified or integrated with other products when the effect of such modification or integration increases the time or difficulty of servicing the product.

THIS WARRANTY IS GIVEN BY TEKTRONIX WITH RESPECT TO THIS PRODUCT IN LIEU OF ANY OTHER WARRANTIES, EXPRESSED OR IMPLIED. TEKTRONIX AND ITS VENDORS DISCLAIM ANY IMPLIED WARRANTIES OF MERCHANTABILITY OR FITNESS FOR A PARTICULAR PURPOSE. TEKTRONIX' RESPONSIBILITY TO REPAIR OR REPLACE DEFECTIVE PRODUCTS IS THE SOLE AND EXCLUSIVE REMEDY PROVIDED TO THE CUSTOMER FOR BREACH OF THIS WARRANTY. TEKTRONIX AND ITS VENDORS WILL NOT BE LIABLE FOR ANY INDIRECT, SPECIAL, INCIDENTAL, OR CONSEQUENTIAL DAMAGES IRRESPECTIVE OF WHETHER TEKTRONIX OR THE VENDOR HAS ADVANCE NOTICE OF THE POSSIBILITY OF SUCH DAMAGES.

PREFACE

This manual contains service information for the TEKTRONIX 2711 & 2712 SPECTRUM ANALYZER.

Other instruction manuals for these products are:

2711 Spectrum Analyzer User Manual
2712 Spectrum Analyzer User Manual
2711 & 2712 Programmer Manual

For manual ordering information, refer to the Replaceable Mechanical Parts List (Accessories List) at the rear of this manual or contact your local Tektronix Field Office.

Who Should Use This Manual?

This manual is intended for electronic technicians with experience in servicing digital, analog, and RF circuitry. Circuit analysis is mostly functional and should help isolate most malfunctions to a board or block of circuitry. The technician should then be able, with the aid of test equipment, to isolate the malfunction to a specific component or components.

Standards and Conventions Used

Most terminology is consistent with standards adapted by IEEE and IEC. Appendix A provides a glossary of terms. Abbreviations used on the instrument and in the documentation are consistent with ANSI Y1.1-1972. Copies of ANSI and IEEE standards can be ordered from the Institute of Electrical and Electronic Engineers Inc.

Change/History Information

Manual corrections or additional information is included when manual pages are revised. A revised page is identified by a revision date located in the lower inside corner of the page.

The manual pages follow a format using descriptive attributes to aid information retrieval. Figure i–1 depicts the pages with the main features called out.

History information, with the updated data, is integrated into the text or diagrams. When a diagram is updated, the revision date is placed on the bottom of the diagram. When a component value is changed, the designator on the drawing will be shown with two asterisks. When a circuit is deleted or changed, the original configuration is shown with a dashed line surrounding the change, drawn either at its original location or to the side of the drawing.

If you have a manual other than the one that came with your instrument, it may contain revisions that do not apply to your instrument; however, all history information that applies to the earlier instruments is retained. When a major modification has been made to an assembly or circuit board, the data for the replaced assembly will follow the new information and will be identified with appropriate titles or headings such as instrument serial number range or the assembly or board part numbers.

Also, if your instrument has an assembly replaced with a newer version, documentation for the newer assembly may be supplied. Contact any Tektronix Service Center for information.

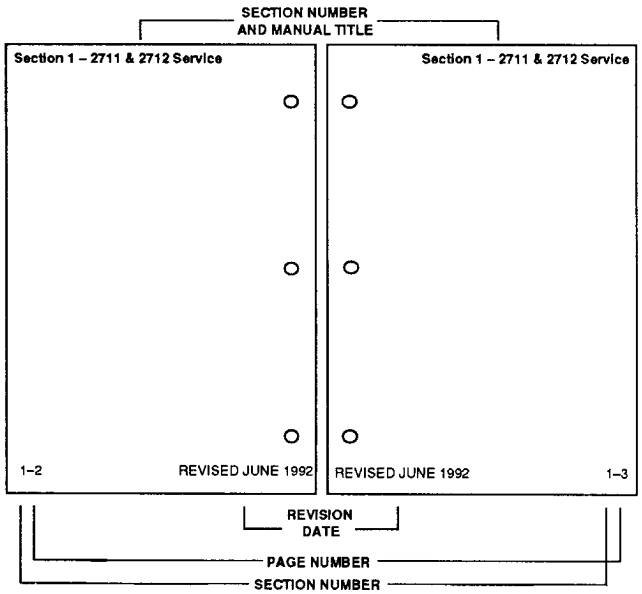

Figure i-1. Manual page attributes.

TABLE OF CONTENTS

Page

PREFACE ---------- I
TABLE OF CONTENTS ---------- iii
LIST OF ILLUSTRATIONS ---------- vi
LIST OF TABLES ---------- vii
SERVICING SAFETY SUMMARY ---------- ix

Section 1 GENERAL INFORMATION

INTRODUCTION ---------- 1-1
INSTRUMENT DESCRIPTION ---------- 1-1
CONFORMANCE TO INDUSTRY STANDARDS ---------- 1-1
PRODUCT SERVICE ---------- 1-1
INSTRUMENT CONSTRUCTION ---------- 1-1
INSTALLATION AND PREPARATION FOR USE ---------- 1-2
POWER CORD ---------- 1-2
SELECTED PARTS ---------- 1-2
REPLACING THE FUSE ---------- 1-2
ASSEMBLY AND CIRCUIT NUMBERING ---------- 1-2
ACCESSORIES ---------- 1-2
APPENDIX A - MENUS ---------- 1-3

Section 2 SPECIFICATION

ELECTRICAL CHARACTERISTICS ---------- 2-1
Frequency Related Characteristics ---------- 2-2
Frequency/Amplitude Related Characteristics ---------- 2-4
Amplitude Related Characteristics ---------- 2-5
Input/Output Signal Characteristics ---------- 2-7
Power Requirements ---------- 2-8
General Characteristics ---------- 2-9
Supplementary Characteristics Due to Options ---------- 2-10
ENVIRONMENTAL CHARACTERISTICS ---------- 2-14
PHYSICAL CHARACTERISTICS ---------- 2-15
CERTIFICATIONS AND COMPLIANCES ---------- 2-16
SAFETY CERTIFICATION COMPLIANCE ---------- 2-17
SAFETY STANDARDS ---------- 2-17

Section 3 PERFORMANCE CHECK

Introduction ---------- 3-1
Incoming Inspection Test ---------- 3-1
Verification of Tolerance Values ---------- 3-1
History Information ---------- 3-1
Equipment Required ---------- 3-1
PERFORMANCE CHECK PROCEDURE ---------- 3-3
Power Up Procedure ---------- 3-3
Front Panel Operation ---------- 3-3
1. Check Frequency Accuracy ---------- 3-3
2. Check Resolution Bandwidth Shape Factor ---------- 3-3
3. Check Short Term Drift ---------- 3-4
4. Check Noise Sidebands ---------- 3-4
5. Check Frequency Span/Div Accuracy ---------- 3-4
6. Check Flatness ---------- 3-5
7. Check Marker Operation ---------- 3-6

Page

Section 3 PERFORMANCE CHECK (Continued)

8. Check Center Measure/Counter Resolution ---------- 3-6
9. Check Display Dynamic Range Accuracy ---------- 3-6
10. Check Sensitivity ---------- 3-7
11. Check Sensitivity @ 1.8 GHz with PREAMP OFF ---------- 3-8
12. Check Spurious Responses ---------- 3-8
13. Check Intermodulation Products (IM) ---------- 3-8
14. Check Harmonic Distortion ---------- 3-9
15. Check Start Spur Amplitude ---------- 3-9
16. Check LO (Local Oscillator) Emission ---------- 3-10
17. Check 1 dB Compression Point ---------- 3-10
18. Check J103 Accessory Connector ---------- 3-10
19. Check Sweep Rate and Sweep Accuracy ---------- 3-11
20. Check Triggering ---------- 3-11
21. Check Internal Calibrator ---------- 3-12
22. Check AM and FM Audio Detectors ---------- 3-12
23. Check Residual FM ---------- 3-13
24. Check VSWR ---------- 3-13
25. Check Signal Track ---------- 3-14
26. GPIB ---------- 3-14
27. Check RS-232 Port ---------- 3-14
OPTIONS ---------- 3-15
28. Option 04 (Tracking Generator) ---------- 3-15
a. Check Frequency Range ---------- 3-15
b. Check Tracking (Frequency Offset) ---------- 3-15
c. Check Output Level Range and Accuracy ---------- 3-15
d. Check VSWR ---------- 3-16
e. Check Tracking Generator Flatness ---------- 3-17
f. Check System Flatness ---------- 3-17
g. Check Characterized Flatness ---------- 3-18
h. Check Spurious Signals ---------- 3-18
i. Check System Dynamic Range ---------- 3-18
29. Check Video Monitor Mode and TV Line Triggers (Option 10) ---------- 3-19
30. Check Option 12 (Quasi-Peak Detector) ---------- 3-19
a. Check Band A ---------- 3-20
b. Check Band B ---------- 3-20
c. Check Bands C and D ---------- 3-21
31. Check Option 15 (1st LO Output Level) ---------- 3-21

Section 4 ADJUSTMENT

Introduction ---------- 4-1
Recommended Test Equipment ---------- 4-1
ADJUSTMENT PROCEDURE ---------- 4-3
PREPARATION ---------- 4-3
1. Adjust Power Supply and Deflection ---------- 4-3
2. Adjust Sweep and Horizontal Deflection Amplifier ---------- 4-5
3. Adjust Display Storage ---------- 4-6
4. Preset Locked 2nd LO ---------- 4-6

TABLE OF CONTENTS (Cont.)

Page

Section 4 **ADJUSTMENT** (Continued)

5. Adjust the Phase Lock CFC ---- 4-7
6. Adjust 5 MHz Resolution Bandwidth ---- 4-9
7. Adjust Log Board ---- 4-9
   a. Adjust 10 dB/div, 5 dB/div, and 1 dB/div Log Match ---- 4-10
   b. Adjust Level ---- 4-10
   c. Check Logging ---- 4-11
   d. Adjust Linear (LIN) Mode ---- 4-11
   e. Adjust Quasi-Peak LOG Path ---- 4-11
   f. Adjust Quasi-Peak LIN Path ---- 4-12
   g. Adjust RF Gain ---- 4-12
   h. Adjust the FM Detector ---- 4-12
8. Adjust Variable Resolution Filters ---- 4-13
   a. Adjust 1 MHz Resolution Bandwidth ---- 4-13
   b. Adjust 300 kHz Resolution Bandwidth ---- 4-13
   c. Adjust 100 kHz Resolution Bandwidth ---- 4-14
   d. Adjust 30 kHz Resolution Bandwidth ---- 4-14
   e. Adjust 3 kHz Resolution Bandwidth ---- 4-14
   f. Adjust 10 kHz Resolution Bandwidth ---- 4-15
   g. Adjust 300 Hz Resolution Bandwidth ---- 4-16
   h. Adjust 300 Hz Resolution Bandwidth Filter in an Option 14 Instrument ---- 4-16
9. Adjust Locked 2nd LO ---- 4-17
10. Perform Gain Step Reference and Reference Amplitude Normalizations ---- 4-17
11. Adjust Flatness ---- 4-17
12. Perform Service Normalizations ---- 4-18
13. Set Reference Frequency Correction bits ---- 4-18

OPTIONS ADJUSTMENTS ---- 4-20
1. Adjust the Tracking Generator ---- 4-20
   a. Isolation Amplifier Gain and Flatness ---- 4-20
   b. Adjust 105.5 MHz Oscillator Balance ---- 4-23
   c. Adjust Phase Lock ---- 4-23
   d. Adjust Flatness ---- 4-25
   e. Adjust Attenuator Flatness ---- 4-26
   f. Perform Tracking Generator Normalizations ---- 4-27
2. Adjust Video Monitor (Option 10) ---- 4-27

Section 5 **MAINTENANCE**

INTRODUCTION ---- 5-1
Static-Sensitive Components ---- 5-1
PREVENTIVE MAINTENANCE ---- 5-2
Cleaning ---- 5-2
Fixtures and Tools for Maintenance ---- 5-2
Visual Inspection ---- 5-3
Transistor and Integrated Circuit Checks ---- 5-3
Performance Checks and Recalibration ---- 5-4
Stored Data in Non-Volatile Memory ---- 5-4
TROUBLESHOOTING ---- 5-4
Troubleshooting Aids ---- 5-4

Page

Section 5 **MAINTENANCE** (Continued)

Diagrams ---- 5-4
Circuit Board Illustrations and Component Locator Charts ---- 5-4
General Troubleshooting Techniques ---- 5-4
Semiconductor Checks ---- 5-4
Diode Checks ---- 5-5
Diagnostic Firmware ---- 5-5
Troubleshooting Steps ---- 5-5
CAL DEBUG FLAGS ---- 5-6
CORRECTIVE MAINTENANCE ---- 5-11
Handling Static-Sensitive Components ---- 5-11
Obtaining Replacement Parts ---- 5-11
Parts Repair and Return Program ---- 5-11
Selected Components ---- 5-11
Replacing Firmware EPROM Devices ---- 5-11
Surface-Mounted Components ---- 5-11
Replacing Surface-Mounted Components ---- 5-12
Soldering Techniques ---- 5-13
Transistor and Integrated Circuit Configurations ---- 5-13
Diode Color Code ---- 5-13
Resistor Values ---- 5-13
Capacitor Marking ---- 5-13
Multiple Terminal (Harmonica) Connectors ---- 5-13
REMOVING AND REPLACING ASSEMBLIES AND SUBASSEMBLIES ---- 5-13
Removing the Instrument from its Cabinet ---- 5-14
Replacing the CRT ---- 5-14
Repairing the CRT Trace Rotation Coil ---- 5-14
Replacing Semi-rigid Coaxial Cables ---- 5-15
Replacing the Front Panel Assembly ---- 5-16
Replacing the RF Deck ---- 5-16
Replacing the 1st LO Assembly ---- 5-16
Replacing the Step Attenuator ---- 5-16
Replacing the 1st LO Buffer Amplifier ---- 5-16
Replacing the Fan Assembly ---- 5-18
Replacing the RF Mother Board ---- 5-18
Replacing the Power Supply Assembly ---- 5-18
Replacing the Batteries (Display Storage and GPIB or RS-232 Boards) ---- 5-21
MAINTENANCE ADJUSTMENTS ---- 5-21
Adjusting the Four Cavity Filter ---- 5-21
Beat Note Level Adjustment ---- 5-21

Section 6 **OPTIONS**

INTRODUCTION ---- 6-1
OPTIONS A1 THROUGH A5 ---- 6-1
OPTION B1 and B2 ---- 6-1
OPTIONS M1 THROUGH M3 ---- 6-1
OPTION 02 ---- 6-1
OPTION 03 ---- 6-1
OPTION 04 ---- 6-2
Accessories (for Option 04) ---- 6-2
OPTION 07 ---- 6-2

TABLE OF CONTENTS (Cont.)

Page

Section 6 OPTIONS (Continued)

OPTION 08 ---------- 6-2
OPTION 10 ---------- 6-2
OPTION 12 ---------- 6-2
OPTION 14 ---------- 6-2
OPTION 15 ---------- 6-2
OPTION 20 ---------- 6-3
OPTION 30 ---------- 6-3
OPTION 33 ---------- 6-3
OPTION 34 ---------- 6-3

Section 7 THEORY OF OPERATION

BLOCK DIAGRAM DESCRIPTION ---------- 7-1
What It Does ---------- 7-1
How It Works ---------- 7-1
ATTENUATOR AND LOW PASS FILTER ---------- 7-1
1ST CONVERTER
AND BANDPASS FILTER ---------- 7-3
2ND CONVERTER ---------- 7-3
RF MOTHER BOARD ASSEMBLY ---------- 7-3
VARIABLE RESOLUTION MODULE ---------- 7-3
LOG AMPLIFIER ---------- 7-3
DISPLAY STORAGE ---------- 7-3
CENTER FREQUENCY CONTROL SYSTEM ---------- 7-3
1st LO ---------- 7-4
100 MHz Reference Oscillator ---------- 7-4
Phase Gate ---------- 7-4
Phase Lock Center Frequency Control ---------- 7-4
Firmware ---------- 7-4
1st LO BUFFER ---------- 7-4
SWEEP ---------- 7-5
DISPLAY SYSTEM ---------- 7-5
CIRCUIT DESCRIPTION ---------- 7-6
ATTENUATOR AND
1ST CONVERTER S1 ---------- 7-6
RF MOTHER BOARD AND
PHASE-LOCKED 2nd LO S2 ---------- 7-9
1ST LO INTERFACE, 1ST LO, AND
1ST LO BUFFER AMPLIFIER S3 ---------- 7-11
REFERENCE OSCILLATOR S4 ---------- 7-13
PHASE LOCK ASSEMBLY S5a, S5b, S5c ---------- 7-16
VARIABLE RESOLUTION MODULE S6a & S6b 7-25
300 Hz BANDPASS FILTER S6c ---------- 7-27
RF OPTIONS S6d ---------- 7-28
LOG AMPLIFIER S8a & S8b ---------- 7-30
DISPLAY STORAGE S9a & S9b ---------- 7-33
MICROPROCESSOR S10a & S10b ---------- 7-35
GPIB, RS-232, REAL TIME CLOCK, &
NVRAM S11a & S11b ---------- 7-44
SWEEP S12 ---------- 7-51
FRONT PANEL S13 ---------- 7-53
POWER SUPPLY <2>
SWITCHER/SECONDARIES ---------- 7-56

Page

Section 7 THEORY OF OPERATION (Continued)

POWER SUPPLY <5>
HV REC AND CRT BIASING ---------- 7-59
TRACKING GENERATOR (OPTION 04) ---------- 7-61
BLOCK DIAGRAM DESCRIPTION ---------- 7-61
LEVELING ---------- 7-61
CONVERSION ---------- 7-61
INTERFACING ---------- 7-61
ISOLATION AMPLIFIERS S15a ---------- 7-63
PHASE LOCK LOOP S15b ---------- 7-63
TG AMPLIFIER S15c ---------- 7-68
TG INTERFACE S15d ---------- 7-69

Section 8 REPLACEABLE ELECTRICAL PARTS ***(for 2711)***

Section 9 REPLACEABLE ELECTRICAL PARTS ***(for 2712)***

Section 9 REPLACEABLE ELECTRICAL PARTS ***(for 2712)***

Section 10 DIAGRAMS

BLOCK DIAGRAM B1
ATTENUATOR and 1ST CONVERTER S1
RF MOTHER BOARD S2a
LOCKED 2ND LO S2b
1st LO INTERFACE, 1st LO, and 1st LO
BUFFER AMP S3
REFERENCE OSCILLATOR S4
PHASE LOCK CENTER FREQUENCY CONTROL S5a
PHASE LOCK CENTER FREQUENCY CONTROL S5b
PHASE LOCK CENTER FREQUENCY CONTROL S5c
VR BOARD S6a
VR FILTER SELECTOR S6b
300 HZ BANDPASS FILTER S6c
RF Options S6d
LOG BOARD S8a
LOG BOARD S8b
DISPLAY STORAGE S9a
DISPLAY STORAGE S9b
MICROPROCESSOR S10a
MICROPROCESSOR S10b
GPIB S11a
RS-232 S11b
SWEEP S12
FRONT PANEL S13
SIGNAL INTERCONNECT <0>
PWM/LINE FILTER <1>
SWITCHER/SECONDARIES <2>
VERT DEFLECTION AMPLIFIER <3>
HORIZ DEFLECTION AMPLIFIER AND BLANKING <4>
HV REGULATOR AND CRT BIASING <5>
I/O SUBSYSTEM <6>
CONNECTORS A <7>
CONNECTORS B <8>
TG ISOLATION AMPLIFIERS S15a
TG PHASE LOCK LOOP S15b
TG AMPLIFIER S15c
TG INTERFACE S15d

LIST OF ILLUSTRATIONS

Figure		Page
1-1	2711 & 2712 menus	1-3
3-1	3rd Order IM (25 MHz separation)	3-9
3-2	Harmonic distortion test equipment setup	3-9
3-3	1 dB Compression Point Test	3-10
3-4	Accessories connector J103	3-11
3-5	Test equipment setup for checking return loss	3-13
3-6	Test equipment setup for measuring return loss	3-16
3-7	Test equipment setup for measuring Tracking Generator Flatness	3-17
3-8	Harmonic spur distribution near the 100 kHz fundamental	3-19
3-9	Test signal on video line 17	3-20
3-10	Test setup for checking the Quasi-Peak detector	3-20
4-1	Adjustment and test point locations on the Power Supply and Sweep boards	4-4
4-2	Display Storage board adjustment locations	4-6
4-3	Location of TP300 on the RF Mother board	4-6
4-4	Locked 2nd LO and 5 MHz Bandpass Filter adjustments	4-7
4-5	Phase Lock CFC Module adjustment and test point locations	4-8
4-6	Log board adjustment and test point locations	4-10
4-7	Option 14 and 300 Hz Filter adjustment locations	4-13
4-8	Variable Resolution module and 300 Hz Bandpass Filter board adjustment locations	4-15
4-9	Presetting the flatness adjustments on the Log board	4-18
4-10	Gain Step Reference test setup	4-19
4-11	SW410 on the Reference Oscillator board	4-19
4-12	Removing the Tracking Generator from the Spectrum Analyzer	4-21
4-13	Test equipment setup for adjusting the Isolation Amplifier output level	4-22
4-14	Adjustment location on the Isolation Amplifier board	4-22
4-15	Adjustment locations on the Phase Lock Loop board	4-24
4-16	Special probe construction	4-24
4-17	Adjustment locations on the Interface board	4-26
4-18	Twisted pairs and bendy tab locations on the Attenuator (Amplifier board)	4-28
4-19	Detector test cable construction	4-29
4-20	Location of TP8 on the Sweep board	4-30
4-21	Typical FM adjustment waveform	4-30
5-1	Main Extender and Secondary Extender	5-3
5-2	Signal steering square pins	5-3
5-3	Surface-mounted components lead configuration	5-11
5-4	Top view of assemblies and RF Deck	5-14
5-5	Assemblies seen from the bottom of the Spectrum Analyzer	5-15
5-6	Removing the Front Panel	5-17
5-7	Location of J510 and J550 on the Phase Lock assembly	5-18
5-8	Connector locations on the RF Deck	5-19
5-9	RF Deck screws and nuts	5-20
5-10	Power Supply assembly removal	5-20
5-11	Removing the Power Supply attaching nuts	5-20
5-12	Location of R602 on the Phase Lock CFC board	5-22
6-1	Option 15 Installation	6-3
7-1	Main Block Diagram	7-2
7-2	Display system	7-5
7-3	Attenuator and 1st Converter	7-6
7-4	Equivalent circuit for the Band-Pass (4-cavity) Filter	7-7
7-5	Cross-section of Band-Pass (4-cavity) Filter	7-8
7-6	RF Mother board assembly block diagram	7-10
7-7	1st LO Interface and 1st LO	7-12
7-8	1st LO Buffer Amplifier	7-13
7-9	Reference Oscillator Block Diagram	7-15
7-10	Crystal heater and 15 V regulation circuit	7-15
7-11	Oscillator AC equivalent	7-15
7-12	Oscillator DC equivalent	7-16
7-13	PLCFC configuration for wide spans (Unlocked, Sweep Main Coil)	7-22
7-14	PLCFC configuration for moderate spans (Unlocked, Sweep FM Coil)	7-23
7-15	PLCFC configuration for narrow spans (Locked, Sweep VCO)	7-24
7-16	Variable Resolution Module block diagram	7-26
7-17	300 Hz Band-Pass Filter module	7-27
7-18	RF Options block diagram	7-29
7-19	CISPR-type filter responses	7-32
7-20	Microprocessor kernel	7-36
7-21	Microprocessor counter system	7-37
7-22	Block diagram for GPIB and RS-232 boards	7-45
7-23	State diagram for the wait state generator in U311	7-45
7-24	Front Panel block diagram	7-53
7-25	Three possibilities of key presses and releases, and how the debounce circuit works for each possibility	7-54
7-26	Power Supply primary block diagram	7-57
7-27	Display amplifiers	7-59
7-28	Tracking Generator block diagram	7-62
7-29	Isolation Amplifiers block diagram	7-64
7-30	2110 MHz Phase Lock Loop block diagram	7-66
7-31	105.5 MHz Oscillator AC equivalent	7-66
7-32	RF Amplifiers block diagram	7-68
7-33	Tracking Generator Interconnect block diagram	7-70

LIST OF TABLES

Table		Page
2-1	FREQUENCY RELATED CHARACTERISTICS	2-2
2-2	FREQUENCY/AMPLITUDE RELATED CHARACTERISTICS	2-4
2-3	AMPLITUDE RELATED CHARACTERISTICS	2-5
2-4	INPUT/OUTPUT CHARACTERISTICS	2-7
2-5	POWER REQUIREMENTS	2-8
2-6	GENERAL CHARACTERISTICS	2-9
2-7	SUPPLEMENTARY CHARACTERISTICS DUE TO OPTIONS	2-10
2-8	ENVIRONMENTAL CHARACTERISTICS	2-14
2-9	PHYSICAL CHARACTERISTICS	2-15
3-1	EQUIPMENT REQUIRED	3-2
3-2	SHAPE FACTOR CHECK SETTINGS	3-4
3-3	NOISE SIDEBANDS CHECK SETTINGS	3-4
3-4	SPAN ACCURACY SETTINGS	3-5
3-5	SENSITIVITY SETTINGS @ 110 MHz	3-7
3-6	SENSITIVITY @ 1.8 GHz	3-8
4-1	EQUIPMENT REQUIRED	4-1
4-2	CORRECTION BIT VALUES	4-19
4-3	TELEVISION CHANNELS	4-28
5-1	RELATIVE SUSCEPTIBILITY TO STATIC DISCHARGE DAMAGE	5-1
5-2	SERVICING TOOLS FOR BOARDS WITH SURFACE MOUNTED COMPONENTS	5-12
6-1	POWER CORD OPTIONS	6-1
6-2	EXTENDED SERVICE AND WARRANTY OPTIONS	6-1
7-1	INPUT AND OUTPUT BIT DEFINITION	7-16
7-2	INTERRUPT CONTROLLER INPUT CONNECTIONS	7-37
7-3	CONFIGURATION OF JUMPERS/WIRES FOR VARIOUS MEMORY IC SIZES	7-38
7-4	DEFINITIONS OF THE SOFTWARE JUMPERS	7-38
7-5	POWER SUPPLY AND SERIAL BUS CONNECTOR SIGNAL NAMES AND DEFINITIONS	7-40
7-6	MICROPROCESSOR INTERFACE CONNECTOR SIGNAL NAMES AND DEFINITIONS	7-41
7-7	MICROPROCESSOR COUNTER SECTION CONNECTOR SIGNAL NAMES AND DEFINITIONS	7-42
7-8	CONNECTORS AND SIGNAL NAMES FOR THE FREQUENCY COUNTER SECTION	7-42
7-9	PIN OUT FOR THE 24-PIN DIN CONNECTOR BETWEEN THE MICROPROCESSOR BOARD AND THE POWER SUPPLY INTERCONNECT AND SERIAL I/O	7-42
7-10	PIN OUT FOR THE MICROPROCESSOR BOARD TEST CONNECTOR	7-43
7-11	PIN OUT FOR THE 50-PIN CONNECTOR BETWEEN THE MICROPROCESSOR, DISPLAY STORAGE, AND DIGITAL OPTIONS BOARDS	7-43
7-12	MICROPROCESSOR INTERFACE CONNECTOR SIGNAL NAMES AND DEFINITIONS	7-47
7-13	GPIB CONNECTOR SIGNAL NAMES AND DEFINITIONS	7-48
7-14	RS-232 CONNECTOR SIGNAL NAMES AND DEFINITIONS	7-48
7-15	PIN OUT FOR CONNECTOR J8 ON THE POWER SUPPLY BOARD	7-49
7-16	PIN OUT FOR GPIB CONNECTOR J150	7-49
7-17	PIN OUT FOR RS-232 CONNECTOR J140	7-49
7-18	PIN OUT FOR RS-232 CONNECTOR J150	7-49
7-19	PIN OUT FOR CONNECTOR J550	7-50
7-20	CONTROL BITS	7-71

SERVICING SAFETY SUMMARY

Do Not Service Alone

Do not perform internal service or adjustment of this product unless another person capable of rendering first aid and resuscitation is present.

Do Not Wear Jewelry

Remove jewelry prior to servicing. Rings, necklaces, and other metallic objects could come into contact with dangerous voltages and currents.

Use Care When Servicing With Power On

Dangerous voltages exist at several points in this product. To avoid personal injury, do not touch exposed connections and components while power is on.

Disconnect power before removing protective panels, soldering, or replacing components.

Power Source

This product is intended to operate from a power source that will not apply more than 250 volts RMS between the supply conductor and ground. A protective ground connection by way of the grounding conductor in the power cord is essential for safe operation.

X-Radiation

X-ray emission generated within this instrument has been sufficiently shielded. Do not modify or otherwise alter the high voltage circuitry or the CRT enclosure.

TERMS

In This Manual

CAUTION statements identify conditions or practices that could result in damage to the equipment or other property.

WARNING statements identify conditions or practices that could result in personal injury or loss of life.

As Marked on Equipment

CAUTION indicates a personal injury hazard not immediately accessible as one reads the marking, or a hazard to property including the equipment itself.

DANGER indicates a personal injury hazard immediately accessible as one reads the marking.

SYMBOLS

In This Manual

This symbol indicates where applicable cautionary or other information is to be found.

As Marked on Equipment

DANGER High Voltage.

Protective ground (earth) terminal.

ATTENTION Refer to manual.

Refer to manual.

Grounding the Product

This product is grounded through the grounding conductor of the power cord. To avoid electrical shock, plug the power cord into a properly wired receptacle before connecting to the product input or output terminals. A protective ground connection by way of the grounding conductor in the power cord is essential for safe operation.

Danger Arising From Loss of Ground

Upon loss of the protective ground connection, all accessible conductive parts (including knobs and controls that may appear to be insulating) can render an electric shock.

Use the Proper Power Cord

Use only the power cord and connector specified for your product.

Use only a power cord that is in good condition.

Refer to Section 1 for information on power cords and connectors.

GENERAL INFORMATION

INTRODUCTION

This Section of the Manual contains the following:

- instrument description
- conformance to industry standards
- product service
- instrument construction
- installation and preparation for use
- power cord
- replacing the fuse
- selected parts
- assembly and circuit numbering
- accessories

INSTRUMENT DESCRIPTION

This instrument is a compact and portable spectrum analyzer for the 9 kHz to 1.8 GHz frequency range. Microprocessor control of most functions simplifies and enhances operation.

The spectrum analyzer's main features are:

- **Precision Measurements** – Menu-selectable routines provide directions for normalizing the internal reference (calibrator signal) to external frequency and amplitude references. After the internal reference is normalized, other menu selections provide for normalizing any instrument measurement parameter.

- **Menu Operation** – Menu-selected routines provide diagnostics, normalization, adjustments, and set-up of basic parameters such as center frequency, frequency span, reference level, vertical scale factor and resolution bandwidth. Each menu is described under "The Menus – Ultimate Flexibility" in the 2711 and 2712 spectrum analyzer Users Manuals.

- **Single and Δ Markers** – A single marker can be enabled to show the frequency and amplitude of a specific point on the display. Delta (Δ) markers show the difference frequency and amplitude between any selected two points on the displayed waveform.

- **Tracking** – Signal tracking holds a drifting signal to center screen.

- **Center Measure** – When this function is activated, the instrument completes the sweep and centers the signal nearest center-screen or, with markers activated, the signal nearest the marker. A readout of center frequency and amplitude is displayed (this requires Option 02 on the 2711 spectrum analyzer).

- **Display** – In the Spectral mode, the numerical values of signals and setup parameters are displayed. In the Menu mode, a menu with its selections and prompts is displayed. Any error, warning, or information messages are displayed in both modes.

CONFORMANCE TO INDUSTRY STANDARDS

This spectrum analyzer conforms with the following industry safety standards and regulatory requirements:

CSA – Electrical Bulletin 556B

ANSI C39.5 (11th Draft) – Safety Requirement for Electrical and Electronic Measuring and Controlling Instrumentation.

IEC 348 (2nd Edition) – Safety Requirement for Electronic Measuring Apparatus.

UL 1244 (2nd Edition) – Measuring Testing Equipment.

PRODUCT SERVICE

To ensure adequate product service and maintenance for our instruments, Tektronix has established Field Offices and Service Centers at strategic points throughout the United States and in countries where our products are sold. Several types of maintenance or repair agreements are available.

For example, for a fixed fee a maintenance agreement program provides maintenance and recalibration on a regular basis. Tektronix will remind you when a product is due for recalibration and perform the service within a specified time.

Contact your local Tektronix Service Center, representative, or sales engineer for details regarding product service.

INSTRUMENT CONSTRUCTION

Modular construction provides ready access to the major circuits. Each circuit board containing RF-sensitive circuits is mounted in a casting, with feedthrough connectors through the compartment walls. Most boards and assemblies plug onto a common interconnect board. Most adjustments and test points are accessible while the instrument is operational and without need of an extender.

Circuit board extenders are available in an optional Service Kit (see Maintenance section under Fixtures and Tools for Maintenance). Most of the modules or boards can be removed without affecting the structural or functional integrity of other modules. The extenders allow extension of any one of six circuit board assemblies in the card-cage out of the operating instrument for easier service or adjustment. The Sweep and Power Supply circuit boards are accessed by removing the instrument's cabinet (and the Variable Resolution assembly in the case of the Power Supply).

All other circuit boards (which should require little service) are accessible by removing the instrument's cabinet and the shielding associated with each assembly.

NOTE

Disassembly of some modules may require special tools and procedures. These procedures and a list of tools are located in the Maintenance section.

Most RF circuits are isolated in shielded compartments to obtain and maintain the frequency stability, sensitivity, and EMI characteristics. While shielding helps ensure a spurious-free response, the closeness of the circuits reduces losses and interactions with other functions. Interconnections between compartments are made by feedthrough terminals rather than cables. If the compartments are opened, be sure that the shields are properly reinstalled before operating.

INSTALLATION AND PREPARATION FOR USE

Section 3 of the 2711 and 2712 Users Manuals provides unpacking, storage, repackaging for shipment, and installation information.

POWER CORD

The power cord that is supplied with the instrument depends on the available power source (see Section 2, Specification, in this manual). Power cord options are described in section 6, Options.

REPLACING THE FUSE

Replace the line fuse with a 2 A Slow-Blow fuse.

SELECTED PARTS

Some components are selected to meet Tektronix specifications. These components are shown in the parts list and may carry a Tektronix Part Number under the Mfr. Part Number column.

Selected value components are identified on the circuit diagram and in the parts list as a "SEL" value. The component description lists either the nominal value or a range of values.

ASSEMBLY AND CIRCUIT NUMBERING

Each assembly and subassembly is assigned an assembly number. Generally, each component is assigned a circuit number according to its geographic location within an assembly. The Replaceable Electrical Parts list prefixes these circuit numbers with the corresponding assembly and subassembly numbers.

Example: R260 on assembly A14 becomes A14R260.

Example: U140 on subassembly A1 of assembly A19 is found in the electrical parts list as A19A1U140.

ACCESSORIES

The Replaceable Mechanical Parts section contains part numbers, descriptions, and ordering information for all standard and optional accessories offered for this spectrum analyzer.

Refer to Appendix D - Options and Accessories in the Users Manual for listings of standard and optional accessories.

Refer to Section 6 - Options in this manual for information on accessories associated with options.

The Accessories page at the end of the Replaceable Mechanical Parts in this manual contains information on all standard accessories currently available with this spectrum analyzer.

APPENDIX A
MENUS

There are eight menus of selections that are used to invoke most of the setups, operational modes, and applications.

A menu of selections may be displayed by pressing its front panel push button. Menu push buttons are grouped together under the MENUS block. See Figure 1-1 and the menu listings on pages 1-4 through 1-7.

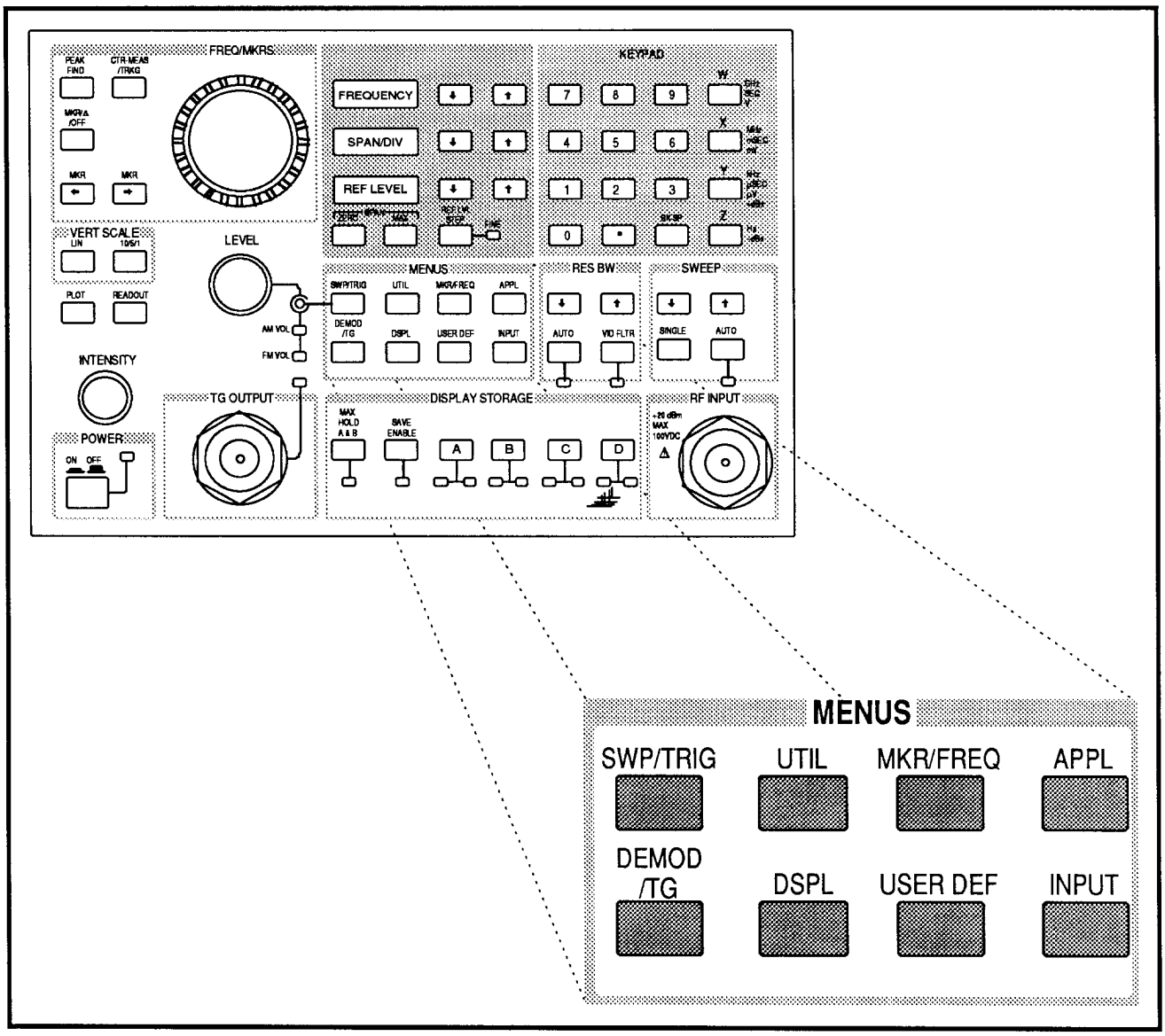

Figure 1-1. 2711 & 2712 menus.

SWP/TRIG

TRIGGER MENU
0 FREE RUN
1 INTERNAL
2 EXTERNAL
3 LINE
4 TV LINE
5 TV FIELD

SWEEP MENU
6 SWEEP RATE
7 MANUAL SCAN
8 SYNC POLARITY
9 SETUP TABLE *(Option 10 only)*
HORIZONTAL LINE TRIGGERING
0 CONTINUOUS
1 KNOB SELECTABLE
2 KEYPAD ENTERED LINE
3 KEYPAD ENTRY
4 TV LINE STANDARD

UTIL

0 INITIALIZE INSTR SETTINGS
1 STORED SETTINGS/DISPLAYS
0 LAST POWER-DOWN
1 FACTORY DEFAULT POWER-UP
2 USER DEFINED POWER-UP
3-8 User-Defined Settings
9 MORE (28 more locations)
2 KEYPAD ENTERED SETTINGS
0 FREQUENCY
1 REFERENCE LEVEL
2 SPAN/DIV
3 RF ATTENUATION
4 RESOLUTION BW
0 AUTO
1 FIXED
5 VIDEO FILTER
0 AUTO
1 FIXED
6 VERTICAL SCALE
0 LOG 1 DB/DIV
1 LOG 5 DB/DIV
2 LOG 10 DB/DIV
3 LINEAR
7 SWEEP RATE
3 NORMALIZATIONS
0 ALL PARAMETERS
1 FREQUENCY ONLY
2 AMPLITUDE ONLY
3 TRACKING GENERATOR ONLY *(Option 04 only)*
4 SYSTEM CONFIGURATION
0 COMMUNICATION PORT CONFIG
0 GPIB *(ALL 2712 & 2711 Option 03 only)*
0 STATUS
1 GPIB ADDRESS
2 POWER ON SRQ
3 EOI/LF MODE
4 TALK ONLY MODE

UTIL (Continued)

4 SYSTEM CONFIGURATION (Continued)

0 COMMUNICATION PORT CONFIG (Continued)

2 RS-232 *(Option 08 Only)*
0 STATUS
1 BAUD RATE
2 DATA BITS
3 PARITY
4 EOL
5 FLOW CONTROL
6 ECHO
7 VERBOSE
1 SCREEN PLOT CONFIGURATION
0 COMM PORT
1 PLOTTER LANGUAGE
2 PLOT SPEED
3 PLOTS PER PAGE
4 PLOT POSITION
5 GRATICULE LINES ON PLOT
2 PRINTER CONFIGURATION
0 PRINTER DEVICE
3 INSTRUMENT CONFIGURATION
0 AUDIO ALERT
1 MINIMUM SIGNAL SIZE
2 WAVEFORM TO PRINTER
3 WAVEFORM OUTPUT FORMAT
4 PHASELOCK *(2712 ONLY)*
5 FREQUENCY CORRECTIONS
6 SPECTRAL DISPLAY IN MENUS
7 SWEEP HOLDOFF
4 REAL-TIME CLOCK SETUP *(Option 03 or 08 only)*
0 SET DAY
1 SET MONTH
2 SET YEAR
3 SET HOUR
4 SET MINUTE
5 SET SECONDS TO :00
6 DISPLAY DATE/TIME
5 STORED SETTINGS PROTECT
6 FILE SYSTEM DIRECTORY
7 PROTECT FILE

9 INSTALLED OPTIONS DISPLAY
includes firmware version
5 INSTR DIAGNOSTICS/ADJUSTMENTS
0 DIAGNOSTICS
0 RF MOTHER-BOARD CAL ASSIST

9 POWERUP DIAG AND REBOOT
1 EXTENDED DIAGNOSTICS
0 DISPLAY STORAGE DATA ACCUM
1 AUDIO BEEP
2
3 FREQUENCY COUNTER TESTS
4 FRONT PANEL KEYS TEST
5 FRONT PANEL LEDS TEST
6 CFC BOARD TEST
7 LOG BOARD DIAGNOSTICS
8 VR GAIN STEP TEST

UTIL 5 INSTR DIAGNOSTICS/ADJUSTMENTS (Continued)

- 2 MANUAL ADJUSTMENTS
  - 1 DEFLECTION AMP CAL
  - 2 DISPLAY STORAGE CAL
  - 3 SWEEP CAL
  - 4 CFCV1 ADJUSTMENTS
  - 8 TRACKING GENERATOR CAL *(Option 04 only)*
- 3 DEBUG MENU
  - 0 ALL DEBUG FLAGS
  - 1 I/O SUBSYS DEBUG FLAGS
  - 2 HW DEBUG FLAGS
  - 3 PORT DEBUG FLAGS
  - 4 CAL DEBUG FLAGS
  - 5 VERBOSE CAL DEBUG FLAGS
  - 6 VERBOSE DEBUG FLAGS
  - 7 READOUT FLAGS
  - 8 DEBUG DISPLAY
  - 9 MORE
    - 0 DATA FLAGS
    - 1 OS DEBUG FLAGS
    - 2 INTERRUPT FLAGS
    - 3 MESSAGE DEBUG FLAGS
    - 4 SWEEP FLAGS
    - 5 OTHER FLAGS
    - 6 DISPLAY DEBUG LOG FILE
    - 7 PRINT DEBUG LOG FILE
    - 8 MEMORY ACCESS UTILITIES
    - 9 MEMORY ALLOCATION FLAGS
- 4 INTERNAL PARAMETERS MENU
  - 0 SETTINGS VERIFY
  - 1 FILE SYSTEM MENU
    - 0 DISPLAY DIRECTORY
    - 1 PRINT DIRECTORY
    - 2 PROTECT FILE
    - 3 PRINT FILE CONTENTS
    - 4 PRINT FILE CONTENTS, FMT
    - 5 FILE SYSTEM CHECK
    - 6 FILE SYSTEM CLEANUP
    - 7 DELETE FILE
    - 8 FILE SYSTEM COMPACTION
    - 9 FILE SYSTEM INIT
  - 2 YIG SETTLE DELAY
- 5 SERVICE NORMALIZATIONS
  - 0 FREQUENCY NORMALIZATIONS
    - 0 UPPER VCO SENS
    - 1 LOWER VCO SENS
    - 2 MAIN DAC OFFSET
    - 3 MAIN DAC SENS
    - 4 FM DAC SENS
    - 5 SPAN/DIV
    - 6 (BLANK)
    - 7 (BLANK)
    - 8 ALL FREQUENCY NORMALIZATIONS
  - 1 REFERENCE NORMALIZATIONS
    - 0 GAIN STEP REFERENCE
    - 1 INTERNAL REF FREQ
    - 2 INTERNAL REF AMPLTD

UTIL 5 INSTR DIAGNOSTICS/ADJUSTMENTS (Continued)

- 5 SERVICE NORMALIZATIONS (Continued)
  - 2 AMPLITUDE NORMALIZATIONS
    - 0 GAIN AND ATTEN
    - 1 GAIN CORRECTION DAC
    - 2 FULL SCREEN OFFSETS
    - 3 BW FLTR AMPLTD<LIN>
    - 4 BW FLTR AMPLTD<LOG>
    - 5 PREAMP & DET GAIN
    - 6 LOG AMPLIFIER
    - 7 SENSITIVITY
    - 8 VR FILTER BW & CEN
    - 9 ALL AMPLITUDE NORMALIZATIONS
  - 3 TRACKING GEN NORMALIZATIONS *(Option 04 only)*
    - 0 TG FREQ OFFSET POS
    - 1 TG FREQ DAC
    - 2 TG ATTENUATORS
    - 3 TG AMPL DAC
    - 9 ALL TG NORMALIZATIONS
  - 4 NORMALIZATION VALUES
    - 0 RF ATTEN AND PREAMP GAIN
    - 1 VR GAIN STEPS
    - 2 VR FINE GAIN
    - 3 FILTER AMPLITUDES
    - 4 FILTER SENSITIVITY
    - 5 LOG NORMALIZATIONS
    - 6 REFERENCES
    - 7 CF NORMALIZATIONS
    - 8 VCO NORMALIZATIONS
    - 9 MISCELLANEOUS
      - 0 VR 6DB BANDWIDTHS
      - 1 VR NOISE BANDWIDTHS
      - 2 VR IMPULSE BANDWIDTHS
      - 3 VR FILTER CENTERING
      - 4 TRACKING GENERATOR PARAMETERS *(Option 04 only)*
  - 5 PRINT ALL NORM VALUES
  - 6 NORM DEBUG TO PRINTER
- 6 DIGITAL OPTIONS DIAGNOSTICS
  - 1 REAL-TIME CLOCK DIAGNOSTICS *(Opt. 03/08 only)*
    - 0 PERFORM RTC ID
    - 1 TEST THE CRYSTAL
    - 2 INITIALIZE THE RTC
  - 2 TTY DIAGNOSTICS
    - 0 DEBUG PORT BAUD RATE
    - 3 MAIN PORT HARDWARE TEST
    - 4 MAIN PORT INPUT TEST
    - 5 MAIN PORT OUTPUT TEST
    - 6 DEBUG PORT HARDWARE TEST
    - 7 DEBUG PORT INPUT TEST
    - 8 DEBUG PORT OUTPUT TEST
  - 3 MEMORY DIAGNOSTICS
    - 0 NVM DATA LINE TEST
    - 1 NVM ADDRESS LINE TEST
    - 2 OPT NVM DATA LINE TEST
    - 3 OPT NVM ADDRESS LINE TEST
    - 4 RAM DATA LINE TEST

UTIL 5 INSTR DIAGNOSTICS/ADJUSTMENTS (Continued)

6 DIGITAL OPTIONS DIAGNOSTICS (Continued)

4 OTHER DIAGNOSTICS
0 YIG ACCURACY TEST
1 LOG ACCURACY TEST
2 PRINT STACK USE TO TTY01
5 GPIB DIAGNOSTICS
0 GPIB HARDWARE TEST
1 MONITOR PORT STATUS
2 TRACE PORT EXECUTION
6 EXT INTERFACE DIAGNOSTICS
0 MONITOR PARSER STATUS
1 TRACE PARSER EXECUTION
2 DISPLAY OUT BUF CONTENTS
3 PRINT OUT BUF CONTENTS
7 TRACKING GENERATOR DIAGS *(Option 04 only)*
0 ATTENUATOR SETTING
1 FREQUENCY DAC VALUE
2 AMPLITUDE DAC VALUE
3 DIVIDER OUTPUT
4 OSCILLATOR
5 AUXILIARY FUNCTIONS
6 AUX1/AUX2 SELECT
7 MANUAL LEVEL ADJUST
8 FAST AMPLITUDE CONTROL
9 COUNT
6 SERVICE REQUEST

9 MORE (Utility Menu Continued)
0 PRINT READOUTS

9 MORE (Return to Previous Menu)

MKR/FREQ

0 THRESHOLD
1 PROGRMD TUNING INC
0 CENTER FREQ
1 MARKER FREQ
2 KEYPAD ENTRD INC
3 KEYPAD ENTRY
4 RETURN TO AUTO
2 KNOB FUNCTION
0 *FREQUENCY
1 MARKER
2 VIDEO LINE *(SWP/TRIG 9 1 enabled) (Option 10 only)*
3 TG TRACKING *(Option 04 only with Tracking enabled)*
3 MARKER TO REFERENCE LEVEL
4 MOVE MARKER TO NEXT PEAK
5 TRANSPOSE MARKERS
6 MARKER START/STOP
7 FREQUENCY START/STOP
0 FREQ START ENTRY
1 FREQ STOP ENTRY
8 TUNING INCREMENT
9 SETUP TABLE
0 CENTER/START FREQ
1 COUNTER RESOLUTION *(Option 02 only)*
0 COUNTER OFF WHEN TRKG (1HZ)
1 1 HZ
2 1 KHZ

MKR/FREQ (Continued)

9 SETUP TABLE (Continued)

2 TABULAR TUNING TABLES
0 *TV VHF UHF
1 CATV STANDARD
2 CATV HRC
3 CATV IRC
4 UHF G AND H
5 UHF I
6 UHF K AND L
7 UHF M (JAPAN)
8 (BLANK)
9 (BLANK)
3 FREQ OFFSET
4 FREQ OFFSET MODE

APPL

0 BANDWIDTH MODE
1 CARRIER TO NOISE
2 NOISE NORM'D
3 SIGNAL SEARCH MENU
0 BEGIN FREQ
1 END FREQ
2 START TEST
3 DISPLAY RESULTS
4 OCCUPIED BW
5 EMC MODE *(2712 OPTION 12 ONLY)*
6 QUASI-PEAK *(2712 OPTION 12 ONLY)*
7 FM DEVIATION MODE

9 SETUP TABLE
0 DB DOWN FOR BW MODE
1 NORM BW FOR C/N
2 NOISE NORM'D BW
3 PERCENT OCCUPIED BW
QUASI-PEAK *(2712 Option 12 only)*
4 AUTO *(2712 Option 12 only)*
5 200HZ FILTER <BAND A> *(2712 Option 12 only)*
6 9KHZ FILTER <BAND B> *(2712 Option 12 only)*
7 120KHZ FILTER <BAND C&D> *(2712 Option 12 only)*

DEMOD/TG

0 OFF
1 AM DEMODULATOR
2 FM DEMODULATOR
3 BROADCAST <AM> VIDEO *(Option 10 only)*
4 TRACKING GENERATOR *(Option 04 only)*
5 TG FIXED LEVEL *(Option 04 only)*
6 TG VARIABLE LEVEL *(Option 04 only)*
7 TG TRACKING *(Option 04 only)*
8 TG EXT ATTEN/AMPL *(Option 04 only)*
0 ON/OFF
1 ATTEN/AMPL ENTRY
9 VIDEO MONITOR SETUP *(Option 10 only)*
0 VIDEO DETECT MODE
1 SYNC POLARITY
2 VIDEO POLARITY

DSPL

- 0 DIGITAL/ANALOG
- 1 ENSEMBLE AVERAGING
  - 1 INITIATE AVERAGING
  - 2 TERMINATE AVERAGING
  - 3 MAX
  - 4 MEAN
  - 5 MIN
  - 6 MAX/MIN
  - 7 NUMBER OF AVERAGES
  - 8 SAVE RESULTS IN DISPLAY
- 2 B,C MINUS A
- 3 B,C MINUS A OFFSET TO
- 4 ACQUISITION MODE
- 5 TITLE MODE
  - 1 TITLE MODE
  - 2 TITLE MODE EDIT
  - 3 PLOT LABELING
  - 4 PLOT LABELING EDIT
- 6 GRATICULE ILLUMINATION
- 7 DISPLAY SOURCE
- 8 DISPLAY LINE
  - 1 ON/OFF
  - 2 VALUE ENTRY
  - 3 DISPLAY LINE TO MARKER
  - 4 LIMIT DETECTOR
- 9 MIN HOLD

USER DEF

- 0 through 8: Storage registers for user-defined programs
- 9 USER DEF PROGRAM UTILITIES
  - 0 ACQUIRE KEY STROKES
  - 1 TITLE EDIT
  - 2 WAIT FOR END OF SWEEP
  - 3 DISPLAY MESSAGE
  - 4 PAUSE FOR "USER DEF" KEY
  - 5 CONTINUOUS EXECUTION
  - 6 STORE
  - 7 DELETE
  - 8 PROTECT

INPUT

- 1 PREAMP
- 2 50 OHM DBM/75 OHM DBMV
- 3 REF LEVEL UNIT
  - 0 DBM
  - 1 DBMV
  - 2 DBV
  - 3 DBUV
  - 4 DBUW
  - 5 DBUV/M IN WFM C
  - 9 DBUV/M SETUP
    - 0 EDIT ANTENNA TABLE
    - 1 through 5: Storage registers for user-defined tables
    - 6 MEASUREMENT DIST
    - 7 SAVE RESULTS IN WFM
    - 9 MARKER DISPLAY
- 4 1ST MIXER INPUT LVL
- 5 RF ATTENUATION
- 6 EXTERNAL ATTEN/AMPL
  - 0 ON/OFF
  - 1 ATTEN/AMPL ENTRY
- 9 CAL SIG @ 100MHZ –30DBM

SPECIFICATION

This section lists the electrical, physical, and environmental characteristics of the spectrum analyzer, specifies performance requirements, and provides supplementary information. Any changes to a characteristic's performance, due to the addition of an option, are integrated with the specific characteristic.

ELECTRICAL CHARACTERISTICS

The following tables of electrical characteristics and features apply to the 2711 and 2712 Spectrum Analyzers after a 15 minute warm-up period (within the environmental limits) and after a Normalization function has been performed.

Information in the Performance Requirement column is guaranteed and verifiable, either through diagnostic routines or written performance check procedures.

Supplemental information is intended to further explain a characteristic, its performance requirement, or it may describe the performance of a characteristic that is impractical to verify. Supplemental information is not guaranteed and may not be supported by a performance check procedure.

Table 2-1
FREQUENCY RELATED CHARACTERISTICS

Characteristic	Performance Requirement	Supplemental Information
Frequency		
Range	9 kHz to 1.8 GHz	Tuned via keypad, FREQUENCY ↑ and FREQUENCY ↓, FREQ/MARKERS knob, or UTIL menu.
Accuracy	1 X 10^{-5} of center frequency ±5 kHz ±1 Least Significant Digit *(2711 only)* 5 X 10^{-7} of center frequency ±10 Hz ±1 Least Significant Digit *(2712 only)*	Assume zero drift since last normalization procedure.
Drift		
Long Term (One Year)		±2 PPM/Year.
Short Term (with SPAN/DIV ≤20 kHz; 2712 only)	≤20 kHz *(2711 only)* ≤400 Hz *(2712 only)*	With frequency corrections enabled.
Readout Resolution		≤1% of the selected Span/Div to 100 Hz *(2711 only)*. 1 kHz or 1Hz (counter readout), menu selectable *(2712 only)*.
Frequency Span/Div		
Range		Selections in a 1-2-5 sequence from 100 MHz/div to 10 kHz/div *(2711 only)* or 1 kHz/div *(2712 only)* via the SPAN ↑ and SPAN ↓ buttons or any value from 100 MHz/div to 10 kHz/div *(2711 only)* or 1 kHz/div *(2712 only)* via the keypad or UTIL menu, plus 180 MHz/div in MAX SPAN and 0 Hz/div in ZERO SPAN.
Accuracy/Linearity	Within 3%.	Measured over the center 8 divisions.
Flatness (About the midpoint between two extremes)	±1.5 dB	Measured with 10 dB of RF Attenuation Flatness is affected by: • Input VSWR (voltage standing-wave ratio) • gain variation • mixer conversion

Table 2-1 (continued)

Characteristics	Performance Requirements	Supplemental Information
Residual FM *(2711 only)*	≤2 kHz peak-to-peak total excursion in 20 ms.	Short term, after 1 hour warm-up.
Residual FM *(2712 only)*		Short term, after 1 hour warm-up, and with PHASELOCK in AUTO mode.
With SPAN/DIV ≤20 kHz	≤100 Hz peak-to-peak total excursion in 20 ms.	
With SPAN/DIV >20 kHz	≤2 kHz peak-to-peak total excursion in 20 ms.	
Resolution Bandwidth (6 dB down)		Resolution bandwidth selections are: 5 MHz, 300 kHz, 30 kHz, 3 kHz, and 300 Hz *(2712 only for 300Hz)* for the standard spectrum analyzer.
Shape Factor (60 dB/6 dB)	7:1 or less for all resolution bandwidths ≤1 MHz	
Noise Sidebands	≤–70 dBc at 30X Resolution Bandwidth for all resolution bandwidths ≤100 kHz	
Video Filter		Reduces video bandwidth to approximately 1/100th of the selected resolution bandwidth; or one of twelve video filters (3 Hz, 10 Hz, 30 Hz, 100 Hz, 300 Hz, 1 kHz, 3 kHz, 10 kHz, 30 kHz, 100 kHz, 300 kHz, or WIDE) can be selected via the UTIL menu.

Table 2-2
FREQUENCY/AMPLITUDE RELATED CHARACTERISTICS

Characteristics	Performance Requirement	Supplemental Information
Marker		The frequency and amplitude values of the marker position are displayed and are preceded by the character "M". MKR → and MKR ← position the marker to the next right or left signal peak, respectively.
Accuracy		
Frequency		Same as Span/Div.
Amplitude		A function of the Reference level, Vertical scale factor, and Normalizations. (See Display Dynamic Range.)
Delta Marker	When activated, a second marker is displayed at the same frequency as the first marker. This is the "Reference Marker".	The FREQ/MARKERS control may be used to position the first marker. The frequency and amplitude differences between markers are readouts preceded by a "D".
Accuracy		
Frequency	1 PPM ±10 Hz of the higher marker frequency *(2712 only)*	Same as Span/Div *(2711 only)*. When both signals are counted *(2712 only)*.
Amplitude		Same as Marker.
Center Measure		When activated, the signal nearest center screen (or with marker on, nearest the marker) and above a preset threshold level, is moved to center screen. The frequency and amplitude values are preceded by "C". *(All 2712 and 2711 Option 02 only.)*
Readout Resolution	10% of Span/Div to 1 kHz *(2711 only)* 1kHz or 1Hz *(2712 only)*	Readout resolution is selectable.
Signal Tracking		When activated, the centered signal is held at center screen. Signal Tracking requires a signal strength greater than the threshold level. If the strength of a signal being tracked decreases below the threshold level, the instrument displays the message NO SIGNAL FOUND ABOVE THRESHOLD.

Table 2-3
AMPLITUDE RELATED CHARACTERISTICS

Characteristic	Performance Requirement	Supplemental Information
Vertical Display Mode		10 dB/Div, 5 dB/Div, 1 dB/Div, and Linear
Reference Level (Top of graticule)		
Range		
Log Mode		–70 dBm to +20 dBm, –23 dBmV to +66.9 dBmV (–90 dBm to 0 dBm, –43 dBmV to +47 dBmV with the PRE-AMP enabled)
Linear Mode		8.84 µV/Div to 280 mV/Div. (884 nV/Div to 28 mV/Div with the PREAMP enabled.)
Steps		
Log Mode		1 dB or 10 dB
Linear Mode		1-2-5 sequence:10 µV/Div to 280 mV/Div
FINE REF LVL STEP Activated		≥0.2 Division per Increment
Accuracy		Dependent on the following: • Normalizations • Calibrator accuracy • Frequency response
Display Dynamic Range	80 dB maximum (Log mode) 8 divisions (Linear mode)	Measurements made within 5 dB of the noise floor are not specified for accuracy.
Accuracy		
10 dB/Div Mode	±1.0 dB/10 dB to a maximum cumulative error of ±2.0 dB over the 70 dB range and a maximum cumulative error of ±4.0 dB over the 80 dB range	In resolution bandwidths of 30 kHz and above, the 80 dB dynamic range is limited by the spectrum analyzer's noise floor.
5 dB/Div Mode	±1.0 dB/10 dB to a maximum cumulative error of ±2.0 dB over the 40 dB range.	
1 dB/Div Mode	±1 dB maximum error over the 8 dB range.	
Linear Mode	±5% of full scale	
RF Attenuator Range		0 to 50 dB in 2 dB steps.

Table 2-3 (continued)

Characteristic	Performance Requirement		Supplemental Information
Sensitivity (without preamp)			Equivalent maximum input noise for each resolution bandwidth.
Resolution Bandwidth	**100 MHz**	**1.8 GHz**	Sensitivity decreases linearly approximately 8 dB from the low end to the high end of the frequency range.
5 MHz	–85 dBm	–77 dBm	
300 kHz	–97 dBm	–89 dBm	
30 kHz	–107 dBm	–99 dBm	***NOTE***
3 kHz	–117 dBm	–109 dBm	*1. Sensitivity degrades as the FREQUENCY setting is decreased from approximately 10 MHz to 9 kHz. Maximum loss in sensitivity is approximately 20 dB.*
300 Hz *(2712 only)*	–127 dBm	–119 dB	
Sensitivity (With preamp)			*2. Sensitivity with the Preamp enabled is not specified above 600 MHz.*
5 MHz	–97 dBm		
300 kHz	–109 dBm		
30 kHz	–119 dBm		
3 kHz	–129 dBm		
300 Hz *(2712 only)*	–139 dBm		
Spurious Responses			
Residual (no input signal)	≤–100 dBm except at 1780 MHz where the spurious response is ≤–90 dBm		With 0 dB RF Attenuation.
Intermodulation Products			
3rd Order	≤–70 dBc		From any two on-screen signals within any frequency span.
Zero Frequency (0 Hz) Spur	≤–10 dBm		Referenced to input with 0 dB RF attenuation.
2nd Harmonic Distortion	≤–66 dBc		Measured with 1st mixer input level of ≤–40 dBm.
LO (Local Oscillator) **Emission**	≤–70 dBm		With 0 dB RF Attenuation.

Table 2-4
INPUT/OUTPUT SIGNAL CHARACTERISTICS

Characteristic	Performance Requirement	Supplemental Information
RF INPUT		Type N female connector.
VSWR with RF Attenuation ≥10 dB	1.5:1 maximum	
VSWR with 0 dB RF Attenuation	3.0:1 maximum	
Maximum Safe Input		20 dBm (0.1 W or 2.2 V) continuous peak. 100 V DC blocking capacitor. ***DO NOT APPLY MORE THAN 100 V DC TO THE RF INPUT***
1 dB Compression Point (Minimum)	–15 dBm	With no RF Attenuation and 1st mixer at –30 dBm.
EXT TRIG (J102)		BNC connector, 10 kΩ impedance, DC coupled input for external trigger signals.
Voltage Range		
Minimum		Typically 100 mV peak, 15 Hz to 1 MHz.
Maximum		50 V (DC + peak AC).
Pulse Width		0.1 µs minimum.
ACCESSORY CONNECTOR (J103)		DB-9 female connector.
Pin 1: External Video Input		Typically 100 Ω, DC coupled, 0 – 50 kHz, 0 – 1.6 V (200 mV/Div) signal input for vertical deflection of the CRT beam. The signal is processed through the video filters and the 1 dB, 5 dB, and 10 dB scale factor circuits on the Log board. Display storage may be bypassed.

Table 2-4 (continued)

Characteristic	Performance Requirement	Supplemental Information
(J103)		
Pin 2: Chassis and Signal Ground		
Pin 3: Video Output	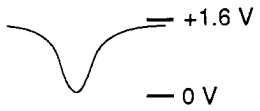	Provides 0 V to +1.6 V of video signal, inversely proportional to the vertical display amplitude. 0 V is the top of the screen. Impedance is 1 kΩ.
Pin 6: Sweep Gate	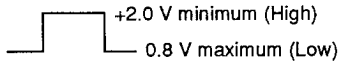	TTL-compatible signal that goes to a logic high level while the CRT beam is sweeping.
Pin 7: Sweep Output	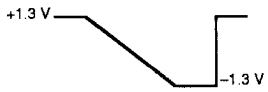	Provides a nominal +1.3 V to –1.3 V negative going ramp, proportional to the horizontal sweep (output impedance ≤50 Ω).
Pins 4, 5, 8, and 9		Reserved for future programming options.
Digital Communications Port (J104) (2712 only)		24-pin connector; conforms to IEEE Standard 488.1-1978.

Table 2-5
POWER REQUIREMENTS

Characteristic	Performance Requirement	Supplemental Information
Input Voltage		
Line Voltage Range	90 V AC to 250 V AC	
Line Frequency Range	48 Hz to 63 Hz	
Line Voltage Range	90 V AC to 132 V AC	
Line Frequency Range	48 Hz to 440 Hz	
Line Fuse	2 A Slow-Blow	
Input Power	90 W (1.2 A) for standard instrument 105 W (1.4 A) maximum with options (115 W maximum at 90 V and 440 Hz)	At 115 V and 60 Hz.
Leakage Current		3.5 mA RMS maximum or 5 mA peak maximum.

Table 2-6
GENERAL CHARACTERISTICS

Characteristic	Performance Requirement	Supplemental Information
Sweep		Normal, Single Sweep, and Manual Scan.
Sweep Rate	1 µs/Div to 2 sec/Div in a 1–2–5 sequence	
Accuracy	±10% over the center 8 divisions	
Triggering		Free Run, Internal, External, Line, TV Line, and TV Field.
Internal Trigger Level	1 division or more of signal	
External Trigger Level		See EXT TRIG (J102) in Table 2-4.
Non-Volatile Memory (Battery-Backed Up)		Instrument settings, waveforms, and Normalization results are stored in non-volatile RAM.
Battery Life (Lithium)		
At +55° C Ambient Temperature		1 to 2 years.
At +25° C Ambient Temperature		At least 5 years.
Temperature Range for Retaining Data		–10° C to + 75° C.
Internal Calibrator		Provides 100 MHz marker for amplitude calibration and comb of 100 MHz markers for frequency and span calibration.
Amplitude and Accuracy	–30 dBm ±0.3 dB at 100 MHz ±5 kHz *(2711 only)* –30 dBm ±0.3 dB at 100 MHz ±2 kHz *(2712 only)*	
Drift	±10 PPM/Year *(2711 only)* ±2 PPM/Year *(2712 only)*	

Table 2-7
SUPPLEMENTARY CHARACTERISTICS DUE TO OPTIONS

Characteristic	Performance Requirement	Supplemental Information
OPTION 02 *(2711 only)*		Adds Frequency Counter.
Frequency Accuracy (Counter) (Spans ≤ 10 MHz/Div)	CF X 10^{-5} ± 10 Hz ± 1 LSD CF = Center Frequency LSD = Least Significant Digit	Assume zero drift since last normalization procedure.
Readout Resolution		1Hz or 1 kHz, menu selectable.
Frequency Drift		10 PPM/Year.
Delta Marker Frequency Accuracy	2(CF X 10^{-5} ± 10 Hz ± 1 LSD)	
OPTION 03 *(2711 only)*		Adds 24-pin connector that conforms to IEEE Standard 488.1-1978, Real Time Clock, and expanded NVRAM.
OPTION 04		Adds Tracking Generator.
Frequency		
Range	100 kHz to 1.8 GHz	Tracks the spectrum analyzer input.
TG TRACKING (Offset)	Sufficient to align tracking generator to spectrum analyzer window.	Auto Frequency correction for centering into spectrum analyzer window, typically –5 kHz to + 60 kHz.
Output Level		
Range	–48 dBm to 0 dBm	0.1 dB steps.
Accuracy	±1.5 dB	At 100 MHz.
Output Impedance		50 Ω nominal.
VSWR	2:1 or better with output level ≤–8 dBm	
Flatness		
Tracking Generator	±1 dB from 100 kHz to 1.0 GHz and ±1.5 dB to 1.8 GHz	Typically ±1 dB to 1.8 GHz.
System[a]	±2.5 dB from 100 kHz to 1.0 GHz and ±3 dB to 1.8 GHz	With 10 dB of attenuation in the spectrum analyzer.
User-Corrected	±0.2 dB	Using B,C– Save A Flatness feature.
System Dynamic Range	≥100 dB	Sensitivity ≥–100 dBm.
System Residual FM		≤100 Hz p-p total excursion in 20 ms.

[a] **System = Tracking generator and spectrum analyzer combination.**

Table 2-7 (continued)

Characteristics	Performance Requirements	Supplemental Information
OPTION 04 (Continued)		
Spurious Signals		
Harmonic	–20 dBc or better with respect to the fundamental	At frequencies ≥100 kHz.
Non-Harmonic	–35 dBc or better with respect to the fundamental	
OPTION 08 *(2711 only)*		Adds an RS232C serial interface port (J103), Real Time Clock, and expanded NVRAM.
OPTION 08 *(2712 only)*		Provides an RS-232C serial interface port (J103). Replaces GPIB.
OPTION 10		Adds Video Monitor capability.
OPTION 12 *(2712 ONLY)*		Adds Quasi Peak Detector and resolution bandwidths of: 1 MHz, 120 kHz, 9 kHz, 1 kHz, and 200 Hz. The 200 Hz filter replaces the standard 300 Hz filter when Option 12 is installed.
Resolution Bandwidth (6 dB down)	Within 20% of the selected resolution bandwidth	120 kHz and 9 kHz filters; 200 Hz filter not specified because it requires special test equipment and procedure to verify.
Shape Factor (60 dB/6 dB)	7:1 or less	
Sensitivity Without Preamp		

Resolution Bandwidth	At 100 MHz	At 1.8 GHz
1 MHz	–92 dBm	–84 dBm
120 kHz	–101 dBm	–93 dBm
9 kHz	–112 dBm	–104 dBm
1 kHz	–122 dBm	–114 dBm
200 Hz	–128 dBm	–120 dBm

Sensitivity With Preamp

Resolution Bandwidth	At 100 MHz	At 1.8 GHz
1 MHz	–104 dBm	Not Specified
120 kHz	–113 dBm	Not Specified
9 kHz	–124 dBm	Not Specified
1 kHz	–134 dBm	Not Specified
200 Hz	–140 dBm	Not Specified

NOTE

1. Sensitivity degrades as the FREQUENCY setting is decreased from approximately 10 MHz to 9 kHz. Maximum loss in sensitivity is approximately 20 dB.

2. Sensitivity with the Preamp enabled is not specified above 600 MHz.

Table 2-7 (continued)

Characteristics	Performance Requirements	Supplemental Information
OPTION 12 (Continued)		
Display Dynamic Range in EMC Mode	Log mode: 40 dB maximum Linear mode: 8 divisions	
Accuracy		
5 dB/Div Mode	±1.0 dB/10 dB to a maximum cumulative error of ±2.0 dB over the first 35 dB range. ±2.0 dB from 35 dB to 40 dB	
1 dB/Div Mode	±1 dB maximum error over the 8 dB range.	
Linear Mode	±5% of full scale	
Video Filter		When enabled, ≈1/100th of the selected resolution bandwidth filter; when not enabled, 3 to 5 times the selected filter, except for the 200 Hz filter which is 3 kHz.
Reference Level Range		
Log Mode		–90 dBm to 0 dBm, –43 dBmV to +47 dBmV.
Lin Mod		884 nV/Div to 28 mV/Div.

Table 2-7 (continued)

Characteristics	Performance Requirements		Supplemental Information
OPTION 14 *(2712 only)*			Adds resolution bandwidth filters of: 1 MHz, 100 kHz, 10 kHz, and 1 kHz.
Resolution Bandwidth (6 dB down)			
Shape Factor (60 dB/6 dB)	7:1 or less		
Sensitivity Without Preamp			***NOTE***
Resolution Bandwidth	**At 100 MHz**	**At 1.8 GHz**	*1. Sensitivity degrades as the FREQUENCY setting is decreased from approximately 10 MHz to 9 kHz. Maximum loss in sensitivity is approximately 20 dB.*
1 MHz	–92 dBm	–84 dBm	
100 kHz	–102 dBm	–94 dBm	
10 kHz	–112 dBm	–104 dBm	
1 kHz	–122 dBm	–114 dBm	*2. Sensitivity with the Preamp enabled is not specified above*
Sensitivity With Preamp			
Resolution Bandwidth	**At 100 MHz**	**At 1.8 GHz**	
1 MHz	–104 dBm	Not Specified	
100 kHz	–114 dBm	Not Specified	
10 kHz	–124 dBm	Not Specified	
1 kHz	–134 dBm	Not Specified	
OPTION 15			
1st LO Output Level	≥0 dBm		

Table 2-8
ENVIRONMENTAL CHARACTERISTICS

The Description column describes how most characteristics were derived and a description of the characteristic. This instrument meets MIL T–28800E, type III class 5, style C specifications.

Characteristic	Description
Temperature	
Operating and Humidity	0° C to +50° C MIL-T-28800E 5 cycles (120 hours).
Non-operating [a]	–55° C[b] to +75° C.
Altitude	
Operating	15,000 ft.
Non-operating	50,000 ft.
Humidity (Non-operating)	Five cycles (120 hours) in accordance with MIL-Std-28800E, class 5.
Vibration	
Operating (Instrument secured to a vibration platform during test)	MIL-T–28800E, Paragraph 4.5.5.3.1 (modified as follows): 15 minutes along each of 3 major axes at a total displacement of 0.015 inch peak-to-peak (2.4 g at 55 Hz), with frequency varied from 10 Hz to 55 Hz in 1-minute sweeps. Hold for 10 minutes at 55 Hz. All major resonances must be above 55 Hz.
Shock (Operating and Non-operating)	Three guillotine-type shocks of 30g, one-half sine, 11 ms duration each direction along each major axis; total of 18 shocks.
Transit Drop (free fall)	8 inch, one per each of five faces and four corners (instrument is tested and meets drop height of 12 inches). Front face and corners excluded.
Electromagnetic Interference (EMI)	
Radiated and Conducted Emission	
VDE	VDE 0871, Class B.

[a] After storage at temperatures below –15° C, the instrument may not reset when power is first turned on. If this happens, allow the instrument to warm up for at least 15 minutes, then turn POWER OFF for 5 seconds and back ON.

[b] NVRAM is lost below –10° C.

Table 2-9
PHYSICAL CHARACTERISTICS

Characteristic	Description
Weight	<11.25 kg (25 lbs) maximum, includes standard accessories. <10.2 kg (22.5 lbs) nominal for basic configuration.
Dimensions	
Height with feet and handle	137 mm (5.4 in)
Width	
With Handle	361 mm (14.2 in)
Without Handle	328 mm (12.9 in)
Depth	
With Front Panel Cover	445 mm (17.5 in)
Without Front Panel Cover	428 mm (16.85 in)
With Handle Extended	511 mm (20.1 in)

Table 2-10
CERTIFICATIONS AND COMPLIANCES

Category	Description
EC Declaration of Conformity – EMC	Meets intent of Directive 89/336/EEC for Electromagnetic Compatibility. Compliance was demonstrated to the following specifications as listed in the Official Journal of the European Communities: EN 50081-1 Emissions: EN 55022 — Class B Radiated and Conducted Emissions EN 60555-2 — AC Power Line Harmonic Emissions EN 50082-1 Immunity: IEC 801-2 — Electrostatic Discharge Immunity IEC 801-3 — RF Electromagnetic Field Immunity IEC 801-4 — Electrical Fast Transient/Burst Immunity IEC 801-5 — Power Line Surge Immunity
EC Declaration of Conformity – Low Voltage	Compliance was demonstrated to the following specification as listed in the Official Journal of the European Communities: Low Voltage Directive 73/23/EEC EN 61010-1:1993 — Safety requirements for electrical equipment for measurement, control, and laboratory use
Approvals	UL1244 – Standard for Electrical and Electronic Measuring and Testing Equipment CAN/CSA C22.2 No. 231 – Safety Requirements for Electrical and Electronic Measuring and Testing Equipment
Installation Category Descriptions	Terminals on this product may have different installation category designations. The installation categories are: CAT III — Distribution-level mains (usually permanently connected). Equipment at this level is typically in a fixed industrial location CAT II — Local-level mains (wall sockets). Equipment at this level includes appliances, portable tools, and similar products. Equipment is usually cord-connected CAT I — Secondary (signal level) or battery operated circuits of electronic equipment

Table 2-11
SAFETY CERTIFICATION COMPLIANCE

Category	Description
Temperature (operating)	+5° C to +50° C
Altitude (maximum operating)	2000 meters (6562 ft.)
Relative Humidity (maximum operating)	80% for temperatures up to 31° C, decreasing linearly to 50% at 40° C
Equipment Type	Test and Measuring
Safety Class	Class I (as defined in IEC 1010-1, Annex H)—grounded product
Overvoltage Category	Overvoltage Category II (as defined in IEC 1010-1, Annex J)
Pollution Degree	Pollution Degree 2 (as defined in IEC 1010-1) Note: Rated for indoor use only

Table 2-12
SAFETY STANDARDS

Category	Standards
U.S. Nationally Recognized Testing Laboratory Listing	UL1244 – Standard for Electrical and Electronic Measuring and Testing Equipment
Canadian Certification	CAN/CSA C22.2 No. 231 – Safety Requirements for Electrical and Electronic Measuring and Test Equipment
European Union Compliance	Low Voltage Directive 73/23/EEC, as Amended by 93/68/EEC EN61010-1/A1 – Safety Requirements for Electrical Equipment for Measurement, Control, and Laboratory Use
Additional Compliance	UL3111-1 – Standard for Electrical Measuring and Test Equipment IEC1010-1 – Safety Requirements for Electrical Equipment for Measurement, Control, and Laboratory Use

PERFORMANCE CHECK

Introduction

Successfully completing the procedures in this section verifies that the instrument is performing according to the characteristics listed in the Performance Requirement column in Section 2, Specification.

If a failure is found, it is recommended that only those circuits that do not meet performance criteria be adjusted. If adjustment fails to return the circuit to specified performance, refer to the Maintenance Section for repair procedures.

A procedure that is unique to instrument options is described as a sub-part of the step where practical, or at the end of this section.

Incoming Inspection Test

The Operators manual contains a system checkout (power-up check) of the spectrum analyzer. This check is recommended for incoming inspections because it requires no external equipment or special experience and is a reliable indication that the instrument is performing properly.

Verification of Tolerance Values

Tests shall be performed only after the normalizations have occurred. If a test should fail, normalize the instrument by pressing UTIL 3 0. The normalization will correct for any changes in the operating environment due to time or temperature.

Measurement tolerance of test equipment should be negligible in comparison to the specification being tested. If not, the error of the measuring apparatus must be added to the specification tolerance.

History Information

Corrections or additional information is included when revisions are made to the manual. If modifications require changes in the procedures, information applicable to earlier instruments will be included within a step or as a sub-part to a step.

Equipment Required

Table 3-1 lists the test equipment recommended for the Performance Check. The characteristics specified are the minimum. If equipment is substituted, it must meet or exceed these specifications.

Table 3-1
EQUIPMENT REQUIRED

Test Equipment	Characteristics	Recommendation
Frequency Standard	100 MHz	Oscillator with an accuracy of 1 X 10^{-9} (WWV Receiver in the USA)
Test Oscilloscope	Deflection Factor: 2 mV/Div to 5 V/Div; Bandwidth: DC to 100 MHz, and X-Y display capability	TEKTRONIX 2236A-Series Oscilloscope and P6108A X10 Probes
Spectrum Analyzer	Frequency range at least 2 GHz to 4 GHz	TEKTRONIX 492PGM
Tracking Generator	Frequency Range: 100 kHz to at least 1.8 GHz	TEKTRONIX TR503
Sweep Oscillator	Output: 0 dBm to +13 dBm Spectral Purity: ≤–25 dBc Flatness: ±0.33 dB	Hewlett Packard 8350B with 11869A Adapter for 86222A Plug-in
Signal Generator	Frequency range of 500 kHz to at least 100 MHz	Hewlett-Packard 8640B
Signal Generator	To at least 225 MHz; 0 to 5 V	TEKTRONIX SG 503 with TM 500-Series Power module
Sine-Wave Generator	1 Hz to 1 MHz; 0 to 20 Vp-p	TEKTRONIX FG 503 Function Generator
VSWR Bridge	10 MHz to 1 GHz	Wiltron VSWR Bridge 62BF50
10 dB and 1 dB Step Attenuators	Range : 132 dB in combined 10 dB and 1 dB steps Accuracy: ±0.1 dB Frequency Range: 0 to at 1 GHz	Hewlett Packard 355C and 355D, calibrated using precision standard attenuators such as Weinschel Model AS-6
Power Meter with Power Sensor	–30 dBm to +20 dBm full scale; 100 kHz to 4.2 GHz	Hewlett Packard Model 436A with 8482A and 8484A Sensors
Directional Coupler	0.125 to 0.25 GHz, 20 dB minimum directivity	Narda Model 3039-20
Time Mark Generator	1 µs markers; accuracy 0.001%	TEKTRONIX TG 501 with TM 500-Series Power module
Bandpass Filter	Centered near 100 MHz with 2nd harmonic rejection better than 90 dB	Tektronix 119-1025-00 (110 MHz)
2 each 20 dB/50 Ω Attenuators		Tektronix Part No. 011-0059-01
Precision 20 dB Attenuator	10 kHz to 1.8 GHz; ±0.4 dB	Weinschel Model 1
BNC T Adapter		Tektronix Part No. 103-0030-00
BNC Female-to-Female Adapter		Tektronix Part No. 103-0028-00
Two 50 Ω Coaxial Cables		Tektronix Part No. 012-0057-01
FM Antenna		Any commercially available FM antenna
2 each Function Generators	0.002 Hz to 20 MHz; 20 mV to 20 V	TEKTRONIX FG5010 with TM 5000-Series Power module

PERFORMANCE CHECK PROCEDURE

Power Up Procedure

a. Connect the spectrum analyzer power cord to an appropriate power source.

b. Push the front panel power switch ON.

c. The instrument will initialize itself according to the configuration stored in the USER DEFINED POWER-UP register. If this register is empty, the instrument will initialize according to the configuration stored in the FACTORY DEFAULT POWER-UP register.

d. Allow a 30-minute warm-up before continuing this procedure.

e. The instrument must be normalized before any measurements can be made. Invoke normalizations by pressing UTIL 3 0. The instrument will begin normalizations and print progress messages on the CRT.

f. If Option 04 is not installed, ignore parts g and j.

g. Press UTIL 3 3 and follow screen prompts to normalize the tracking generator.

h. After the instrument has completed normalization, press UTIL 5 5 0 and verify that all frequency-related normalizations have passed.

i. Press BKSP and 2, and verify that all amplitude-related normalizations have passed.

j. Press BKSP 3 and verify that all tracking generator-related normalizations have passed.

k. Press any menu button to exit the menu.

Front Panel Operation

Refer to the 2711 or 2712 Spectrum Analyzer User Manuals for an explanation of front-panel functions.

1. Check Frequency Accuracy

(1 X 10^{-5} X CF ± 5 kHz ± 1 LSD) *(2711 non-Option 02 only)*
(1 X 10^{-5} X CF ± 10 Hz ± 1 LSD) *(2711 option 02 only)*
(5 X 10^{-7} X CF ± 10 Hz ± 1 LSD) *(2712 only)*
CF = Center Frequency
LSD = Least Significant Digit

Equipment Required:

- 100 MHz Frequency Standard

a. Recall default power-up settings by pressing UTIL 1 1.

b. Select the following settings on the spectrum analyzer:

FREQUENCY	100 MHz
REFERENCE LEVEL	–20 dBm
SPAN/DIV	100 kHz
RESOLUTION BW	AUTO

c. Set the counter resolution to 1 Hz by pressing MKR/FREQ 9 1 1.

d. Connect a verified 100 MHz signal (such as the output of a generator locked to WWV) to the RF INPUT.

e. If necessary, reset the REFERENCE LEVEL for a well-defined signal.

f. Center the signal by pressing CTR-MEAS/TRKG.

g. Check that the readout displays the frequency of the signal within ± 6 kHz for the 2711, 1.01 kHz for the 2711 Option 02, or ±60 Hz for the 2712. For the 2711(non-option 02), select 10 kHz span and check that the signal is ± 3 minor divisions of center screen.

h. Disconnect the signal from the RF INPUT.

2. Check Resolution Bandwidth Shape Factor

(7:1 or less)

a. Recall default power-up settings by pressing UTIL 1 1.

b. Select the following settings on the spectrum analyzer:

FREQUENCY	100 MHz
REFERENCE LEVEL	–30 dBm
SPAN/DIV	2 MHz
RESOLUTION BW	5 MHz
VID FLTR	On
VERTICAL SCALE	10 dB/div
SWEEP	AUTO

c. Enable the Calibrator by pressing INPUT 9.

d. Enable MAX/MIN ACQUISITION MODE by pressing DSPL 4.

e. Press APPL 9 0 and enter –6 dBc. Press BKSP and 0 to activate bandwidth mode (exits the menu).

f. The marker readout displays the bandwidth of the filter 6 dB down from peak amplitude. Make a note of this value.

g. Extrapolate the skirts of the 5 MHz filter to make the measurement at the 60 dB level.

h. Check that the ratio of the 60 dB bandwidth to the 6 dB bandwidth is 7:1 or less.

i. Using Table 3-2, verify that the –60 dBc readings for the other resolution bandwidth filters are no more than 7X the –6 dBc reading.

j. Exit bandwidth mode by pressing MKR Δ OFF.

Table 3-2
SHAPE FACTOR CHECK SETTINGS

SPAN/DIV	Resolution BW
2 MHz	5 MHz
1 MHz	1 MHz [a]
200 kHz	300 kHz
100 kHz	120 kHz [b]
100 kHz	100 kHz [c]
10 kHz	30 kHz
10 kHz	10 kHz [c]
10 kHz	9 kHz [b]
10 kHz	3 kHz
10 kHz	1 kHz [a]
1 kHz	300 Hz [d]
1 kHz	200 Hz [b]

[a] 2712 Option 12 and Option 14
[b] 2712 Option 12 only
[c] 2712 Option 14 only
[d] 2712 Only

3. Check Short-Term Drift

(≤20 kHz between frequency corrections for the 2711)
(≤400 Hz between frequency corrections for the 2712)

a. Recall default power-up settings by pressing UTIL 1 1.

b. Select the following settings on the spectrum analyzer:

FREQUENCY	100 MHz
REFERENCE LEVEL	–30 dBm
SPAN/DIV	10 kHz *(2711 only)*
SPAN/DIV	1 kHz *(2712 only)*
RESOLUTION BW	AUTO
VID FLTR	Off
VERTICAL SCALE	10DB/DIV
SWEEP	AUTO

c. Enable the Calibrator by pressing INPUT 9.

d. Press CTR-MEAS/TRKG to center the signal.

e. Check that the signal does not move more than ±2 divisions from center-screen for the 2711 or ±2 minor divisions from center-screen for the 2712.

4. Check Noise Sidebands

(≥70 dBc at 30X Resolution Bandwidth)

a. Recall default power-up settings by pressing UTIL 1 1.

b. Enable the Calibrator by pressing INPUT 9.

c. Select the following settings on the spectrum analyzer:

FREQUENCY	100 MHz
REFERENCE LEVEL	–30 dBm
SPAN/DIV	5 MHz
RESOLUTION BW	300 kHz
VID FLTR	On
VERTICAL SCALE	10 dB/
SWEEP	AUTO

d. Enable peak detection mode by pressing DSPL 4.

e. Check that the noise sidebands are at least 70 dB down from peak amplitude at ≥9 MHz away from center frequency (30 times the selected bandwidth).

f. Reset RESOLUTION BW and SPAN/DIV settings according to Table 3-3 to check the rest of the filters.

Table 3-3
NOISE SIDEBANDS CHECK SETTINGS

SPAN/DIV	RESOLUTION BW	30 X RBW
5 MHz	300 kHz	9 MHz
1 MHz	120 kHz [a]	3.6 MHz
1 MHz	100 kHz [b]	3 MHz
500 kHz	30 kHz	900 kHz
100 kHz	10 kHz [b]	300 kHz
100 kHz	9 kHz [a]	270 kHz
50 kHz	3 kHz	90 kHz
10 kHz	1 kHz [c]	30 kHz
5 kHz	300 Hz [d]	9 kHz
1 kHz	200 Hz [a]	6 kHz

[a] 2712 Option 12 only
[b] 2712 Option 14 only
[c] 2712 Option 12 and Option 14 only
[d] 2712 only

5. Check Frequency Span/Div Accuracy

(Within 3% over the center 8 divisions)

Equipment Required:

- Time Mark Generator

a. Recall default power-up settings by pressing UTIL 1 1.

b. Connect a time mark generator to the RF INPUT and select 10 ns marks.

Table 3–4
SPAN ACCURACY SETTINGS

Time Markers	Center Frequency	Span/Div	Resolution Bandwidth	Spec Range
10 ns	500 MHz	100 MHz	300 kHz	776 – 824 MHz
20 ns	250 MHz	50 MHz	300 kHz	388 – 412 MHz
50 ns	100 MHz	20 MHz	300 kHz	155.2 – 164.8 MHz
0. 1 µs	50 MHz	10 MHz	30 kHz	77.6 – 82.4 MHz
0.2 µs	25 MHz	5 MHz	30 kHz	38.8 – 41.2 MHz
0.5 µs	10 MHz	2 MHz	30 kHz	15.52 – 16.48 MHz
1 µs	5 MHz	1 MHz	30 kHz	7.76 – 8.24 MHz
2 µs	2.5 MHz	500 kHz	30 kHz	3.88 – 4.12 MHz
5 µs	1 MHz	200 kHz	3 kHz	1.552 – 1.648 MHz
10 µs	500 kHz	100 kHz	3 kHz	776 – 824 kHz
20 µs	250 kHz	50 kHz	3 kHz	388 – 412 kHz
50 µs	125 kHz	20 kHz	3 kHz	155.2 – 164.8 kHz
0.1 ms	62.5 kHz	10 kHz	3 kHz	77.6 – 82.4 kHz
0.2 ms	25 kHz	5 kHz[b]	300 Hz[a]	38.8 – 41.2 kHz
0.5 ms	25 kHz	2 kHz[b]	300 Hz[a]	15.52 – 16.48 kHz
1.0 ms	25 kHz	1 kHz[b]	300 Hz[a]	7.76 – 8.24 kHz

[a] 200 Hz when Option 12 is installed (2712 only)
[b] 2712 only

c. Select the following settings on the spectrum analyzer:

FREQUENCY	500 MHz
REFERENCE LEVEL	Set for Visible Marks
SPAN/DIV	100 MHz
RESOLUTION BW	300 kHz
VID FLTR	Off

d. Enable peak detection mode by DSPL MENU 4.

e. Press MKR/Δ/OFF to enable the marker system and tune the marker to the time mark signal at the 2nd graticule line from the left.

f. Press MKR/Δ/OFF again to enable the delta marker and tune the second marker to the time mark signal at the 10th graticule line.

g. The delta frequency readout should read between 776 MHz and 824 MHz. Disable markers by pressing MKR/Δ/OFF.

h. Use Table 3-4 and repeat parts e and f to check the rest of the spectrum analyzer spans.

i. Disconnect the time mark generator from the RF INPUT.

6. Check Flatness

(±1.5 dB with 10 dB of RF ATTENUATION)

Equipment Required:

- Sweep Oscillator

a. Recall default power-up settings by pressing UTIL 1 1.

b. Select the following settings on the spectrum analyzer:

REFERENCE LEVEL	–20 dBm
SPAN/DIV	MAX
RESOLUTION BW	AUTO
VERTICAL SCALE	1 dB/

c. Connect the output of the sweep oscillator to the RF INPUT. Set the sweep oscillator output frequency to 100 MHz and output amplitude for a 5-division excursion. The sweep oscillator's sweep rate should be set on its slowest setting.

d. Press A to enable the Display A register. Start the sweep on the sweep oscillator, and press MAX HOLD A & B on the spectrum analyzer.

e. Check that the difference between the highest and lowest points of the displayed sweep is no more than 3 dB.

f. Disconnect the sweep oscillator from the RF INPUT.

7. Check Marker Operation

a. Recall default power-up settings by pressing UTIL 1 1.

b. Select the following settings on the spectrum analyzer:

FREQUENCY	500 MHz
REFERENCE LEVEL	–10 dBm
SPAN/DIV	100 MHz
RESOLUTION BW	300 kHz
VID FLTR	On
VERTICAL SCALE	10 dB/

c. Enable the Calibrator by pressing INPUT 9. The instrument should display a series of 100 MHz marks of varying amplitudes.

d. Press PEAK FIND. The marker should go to the highest signal, and the readout should display that signal's frequency and amplitude. Frequency and amplitude readouts are preceded by the letter M.

e. Press MKR → and note that the marker moves to the next signal to the right and the readouts are updated. Continue pressing MKR → and observe the marker position and readouts. The marker will only recognize those signals whose amplitude is above a preset or default threshold level, and will not recognize apparent signals ≤0 Hz. The threshold level is set via MKR/FREQ 0.

f. Repeat part e using the MKR ← button.

g. Press MKR/Δ/OFF once. The readouts should now be preceded by the letter D and read 0.

h. Tune the FREQ/MKRS control and note that a second marker appears. The marker readout should now display frequency and amplitude differences between the two markers.

8. Check Center Measure/Counter Resolution

(Counter Resolution selectable: 1 Hz or 1 kHz)

a. Recall default power-up settings by pressing UTIL 1 1. Select the following settings on the spectrum analyzer:

FREQUENCY	100 MHz
REFERENCE LEVEL	–20 dBm
SPAN/DIV	100 kHz
RESOLUTION BW	AUTO
VID FLTR	Off
VERTICAL SCALE	5 dB/

b. Enable the Calibrator by pressing INPUT 9.

c. Tune the signal approximately three divisions to one side of the center of the screen.

NOTE

Skip steps d, e, and f if your 2711 does not include Option 02, Frequency Counter.

d. Select a counter resolution of 1 Hz by pressing MKR/FREQ 9 1 1. Press CTR-MEAS/TRKG.

e. Check that the signal is moved to center-screen, frequency and amplitude readouts are preceded by the letter C, and the frequency readout is displayed to six decimal places.

f. Select a readout resolution of 1 kHz.

g. Press CTR-MEAS/TRKG. Check that the signal frequency readout is displayed to three decimal places and that the signal moves to center-screen (2711 non-Option 02 will not have Frequency counter readout).

9. Check Display Dynamic Range Accuracy

(10 dB/: ±1.0 dB/10 dB to a maximum cumulative error of ±2.0 dB over the 70 dB range and a maximum cumulative error of ±4.0 dB over the 80 dB range.

5 dB/: ±1.0 dB/10 dB to a maximum cumulative error of ±2.0 dB over the 40 dB range.

1 dB/: ±1 dB maximum error over the 8 dB range.

Linear: ±5% of full scale)

Equipment Required:

- Signal Generator
- 10 dB and 1 dB Step Attenuators

a. Recall default power-up settings by pressing UTIL 1 1. Select the following settings on the spectrum analyzer:

FREQUENCY	100 MHz
REFERENCE LEVEL	–20 dBm
SPAN/DIV	10 MHz
RESOLUTION BW	AUTO
VID FLTR	Off
VERTICAL SCALE	10 dB/

b. Enable peak detection mode by DSPL MENU 4.

c. Connect a 100 MHz signal to the RF INPUT through the 10 dB and 1 dB step attenuators.

d. Set the attenuators for 0 dB of attenuation, and set the amplitude of the input signal for full screen deflection.

e. Insert a total of 80 dB of attenuation in the input signal path in 10 dB steps, while noting the signal level as each 10 dB of attenuation is added.

f. Check that the signal level falls within a minor division of each attenuation step over the first seven steps. The cumulative error over the first seven steps (70 dB) must not exceed two minor divisions (±2 dB), and the cumulative error over the eight steps (80 dB) must not exceed four minor divisions (±4 dB).

g. Reset the VERTICAL SCALE to 5 dB/div and reset the attenuators for 0 dB of attenuation. Check to see that the signal is at the top graticule line and, if necessary, reset the amplitude of the input signal for full-screen deflection.

h. Insert a total of 40 dB of attenuation in the input signal path in 10 dB steps, while noting the signal level as each 10 dB of attenuation is added.

i. Check that the signal level falls within one minor division (1 dB) of the –30 dB, –40 dB, –50 dB, and –60 dB graticule lines for each 10 dB total added attenuation. The cumulative error over the 40 dB range must not exceed two minor divisions (±2 dB).

j. Reset the VERTICAL SCALE to 1 dB/div and reset the attenuators for 0 dB of attenuation. Check to see that the signal is at the top graticule line and, if necessary, reset the amplitude of the input signal for full screen deflection.

k. Insert a total of 8 dB of attenuation in the input signal path in 1 dB steps, while noting the signal level as each 1 dB of attenuation is added.

l. Check that the signal level falls within one major division (±1 dB) of the –31 dB, –32 dB, –33 dB , –34 dB, –35 dB, –36 dB, –37 dB, and –38 dB graticule lines for each 1 dB of external attenuation added.

m. Reset the VERTICAL SCALE to LIN and reset the attenuators for 0 dB of attenuation. Check to see that the signal is at the top graticule line and, if necessary, reset the input signal amplitude for full screen deflection.

n. Insert 6 dB of attenuation in the input signal path.

o. Check that the trace is within 2 minor divisions of the fourth graticule line from top-screen.

p. Add 6 dB more of attenuation to the input signal (12 dB total attenuation).

q. Check that the trace is within 2 minor divisions of the sixth graticule line from top-screen.

r. Add 6 dB more of attenuation to the input signal (18 dB total attenuation).

s. Check that the trace is within 2 minor divisions of the seventh graticule line from top-screen.

t. Disconnect the signal generator from the RF INPUT.

10. Check Sensitivity

(See Table 3-5)

a. Recall default power-up settings by pressing UTIL 1 1. Select the following settings on the spectrum analyzer:

FREQUENCY	110 MHz
REFERENCE LEVEL	–50 dBm
SPAN/DIV	5 MHz
RESOLUTION BW	5 MHz
VERTICAL SCALE	10 dB/

b. Set the VIDEO FILTER to 10 Hz via UTIL 2 5 1.

c. Enable peak detection mode by pressing DSPL 4.

d. Connect a 110 MHz, –85 dBm signal to the RF INPUT.

e. After one sweep, press MKR/Δ/OFF to enable the marker. Tune the marker away from the signal and onto the noise. Press MKR/Δ/OFF to enable a second marker (the delta marker) and position the delta marker on the signal peak. It may be necessary to keep retuning the delta marker if the signal is drifting.

f. Check that the indicated delta amplitude is ≥2.1 dB.

Table 3-5
SENSITIVITY SETTINGS @ 110 MHz

SPAN	RES BW	Ref Level	RF INPUT Level	
			Preamp OFF	Preamp ON
5 MHz	5 MHz	–50 dBm	–85 dBm	–97 dBm
1 MHz	1 MHz[a]	–50 dBm	–92 dBm	–104 dBm
200 kHz	300 kHz	–50 dBm	–97 dBm	–109 dBm
100 kHz	120 kHz[b]	–60 dBm	–101 dBm	–113 dBm
100 kHz	100 kHz[c]	–60 dBm	–102 dBm	–114 dBm
50 kHz	30 kHz	–70 dBm	–107 dBm	–119 dBm
20 kHz	10 kHz[c]	–70 dBm	–112 dBm	–124 dBm
20 kHz	9 kHz[b]	–70 dBm	–112 dBm	–124 dBm
10 kHz	3 kHz	–70 dBm	–117 dBm	–129 dBm
10 kHz	1 kHz[a]	–70 dBm	–122 dBm	–134 dBm
1 kHz	300 Hz[d]	–70 dBm	–127 dBm	–139 dBm
1 kHz	200 Hz[b]	–70 dBm	–128 dBm	–140 dBm

[a] 2712 Option 12 and Option 14 only
[b] 2712 Option 12 only
[c] 2712 Option 14 only
[d] 2712 only

g. Enable the preamplifier by pressing INPUT MENU 1 (PREAMP), and reset the input signal amplitude to –97 dBm.

h. Check that the readout shows the difference amplitude to be ≥2.1 dB.

i. Using Table 3-5, check the rest of the filters with and without the PREAMP enabled. If necessary, use an external attenuator to reach a –139 dBm setting.

Table 3-6
SENSITIVITY @ 1.8 GHz

RES BW	Reference Level	Sensitivity
5 MHz	–30 dBm	–77 dBm
1 MHz	–30 dBm	–84 dBm[a]
300 kHz	–30 dBm	–89 dBm
120 kHz	–40 dBm	–93 dBm[b]
100 kHz	–40 dBm	–94 dBm[c]
30 kHz	–50 dBm	–99 dBm
10 kHz	–50 dBm	–104 dBm[c]
9 kHz	–50 dBm	–104 dBm[b]
3 kHz	–60 dBm	–109 dBm
1 kHz	–60 dBm	–114 dBm[a]
300 Hz	–70 dBm	–119 dBm[d]
200 Hz	–70 dBm	–120 dBm[b]

[a] **2712 Option 12 and Option 14**
[b] **2712 Option 12 only**
[c] **2712 Option 14 only**
[d] **2712 only**

11. Check Sensitivity @ 1.8 GHz with PREAMP OFF
(See Table 3-6)

a. Recall default power-up settings by pressing UTIL 1 1.

b. Select the following settings on the spectrum analyzer:

FREQUENCY	1800 MHz
REFERENCE LEVEL	–30 dBm
SPAN/DIV	ZERO SPAN
RESOLUTION BW	5 MHz
VERTICAL SCALE	10 dB/

c. Set the VIDEO FILTER to 10 Hz via UTIL 2 5 1.

d. Make sure that the Preamplifier is disabled (INPUT 1).

e. Check that the noise floor is ≤–77 dBm.

f. Use Table 3-6 to check sensitivity for the rest of the bandpass filters.

12. Check Spurious Responses
(≤–100 dBm)

a. Recall default power-up settings by pressing UTIL 1 1.

b. Select the following settings on the spectrum analyzer:

REFERENCE LEVEL	–40 dBm
SPAN/DIV	1 MHz
RESOLUTION BW	30 kHz
VIDEO FILTER	On
VERTICAL SCALE	10 dB/
ACQUISITION MODE	PEAK

c. Set the threshold level at –105 dBm by pressing MKR/FREQ 0 and entering –105 dBm.

d. Select the CRT as the output device by pressing UTIL 4 2 0. Press any menu button to exit the menu.

e. Start the spur search routine by pressing APPL 3 2.

f. When the spur search routine is done, display the results by pressing APPL 3 3. Make a note of the listed spur frequencies.

g. Manually check that the amplitude of any listed spur is ≤–100 dBm. Disregard the 0 Hz spur.

13. Check Intermodulation Products (IM)
(3rd Order IM ≤–70 dBc)

Equipment Required:

- 2 Signal Generators
- 2 20 dB Pads
- BNC T Adapter

a. Recall default power-up settings by pressing UTIL 1 1.

b. Connect the test equipment as shown in Figure 3-1.

c. Select the following settings on the spectrum analyzer:

FREQUENCY	200 MHz
REFERENCE LEVEL	–30 dBm
SPAN/DIV	10 MHz
RESOLUTION BW	30 kHz
VERTICAL SCALE	1 dB/

d. Set the VIDEO FILTER to 3 kHz via UTIL 2 5 1.

e. Set the first generator for a 200 MHz, full-screen signal.

f. Set the second generator for a 225 MHz, full-screen signal.

g. Reset the VERTICAL SCALE to 10 dB.

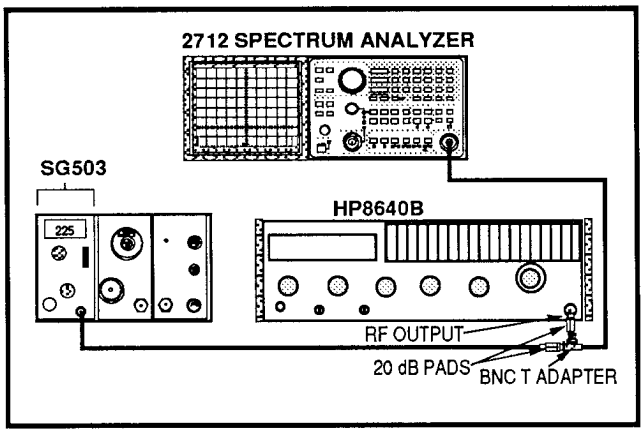

Figure 3-1. 3rd Order IM (25 MHz separation)

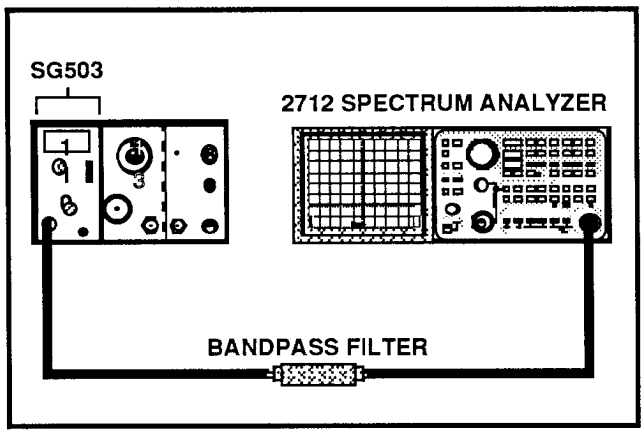

Figure 3-2. Harmonic distortion test equipment setup.

h. Check that the 3rd Order IM product is ≤–70 dBc.

i. Reset the VERTICAL SCALE to 1 dB and FREQ SPAN/DIV to 500 kHz.

j. Reset the second generator output frequency for a 201 MHz, full-screen signal.

k. Reset the VERTICAL SCALE to 10 dB/.

l. Check that the 3rd Order IM products are ≤–70 dBc.

m. Disconnect the test equipment from the RF INPUT.

14. Check Harmonic Distortion

(66 dB down or more from carrier)

Equipment Required:

- Signal Generator
- Bandpass Filter

a. Recall default power-up settings by pressing UTIL 1 1.

b. Connect the test equipment as shown in Figure 3-2.

c. Select the following settings on the spectrum analyzer:

REFERENCE LEVEL	–40 dBm
SPAN/DIV	100 kHz
RESOLUTION BW	AUTO
VID FLTR	On
VERTICAL SCALE	10 dB/

d. Set the generator output frequency and the spectrum analyzer center frequency to the frequency of the bandpass filter.

e. Set the signal generator output amplitude for a full screen signal.

f. Reset the spectrum analyzer center frequency to twice the input frequency.

g. Check that the 2nd harmonic is ≤–66 dBc.

h. Disconnect the test equipment from the RF INPUT.

15. Check Start Spur Amplitude

(≤–10 dBm)

Equipment Required:

- Signal Generator

a. Recall default power-up settings by pressing UTIL 1 1.

b. Select the following settings on the spectrum analyzer:

FREQUENCY	100 MHz
REFERENCE LEVEL	–30 dBm
SPAN/DIV	200 kHz
RESOLUTION BW	300 kHz
VID FLTR	On

c. Connect a 100 MHz, –10 dBm signal to the RF INPUT.

d. Press SAVE ENABLE and A to store the reference signal in the A DISPLAY STORAGE register, then enable the A display by pressing A.

e. Reset the FREQUENCY to 0 Hz.

f. Check that the 0 Hz spur skirts are equal to or narrower than those of the stored signal.

g. Disconnect the test equipment from the RF INPUT.

16. Check LO (Local Oscillator) Emission
(≤–70 dBm)

Equipment Required:

- Test Spectrum Analyzer

a. Recall default power-up settings by pressing UTIL 1 1.

b. Select the following settings on the spectrum analyzer:

REFERENCE LEVEL	–30 dBm
SPAN/DIV	MAX

c. Enable manual scan by pressing SWP/TRIG 7.

d. Monitor the RF INPUT with the test spectrum analyzer. Set the test spectrum analyzer controls to monitor the 2 GHz to 4 GHz frequency range.

e. Tune the Manual Scan control from full counter-clockwise to fully clockwise while viewing the display.

f. Check that any signal that appears on the test spectrum analyzer as the Manual Scan control is tuned, is ≤–70 dBm.

g. Disconnect the spectrum analyzer from the RF INPUT.

17. Check 1 dB Compression Point
(≥–15 dBm)

Equipment Required:

- 2 Signal Generators
- Directional Coupler

a. Recall default power-up settings by pressing UTIL 1 1.

b. Connect the test equipment as shown in Figure 3-3.

c. Select the following settings on the spectrum analyzer:

FREQUENCY	200 MHz
REFERENCE LEVEL	–30 dBm
SPAN/DIV	10 kHz
RESOLUTION BW	30 kHz
VID FLTR	On
VERTICAL SCALE	1 dB/

d. Enable PEAK ACQUISITION mode by pressing DSPL 4.

e. Set one signal generator's controls for a full-screen, 200 MHz signal.

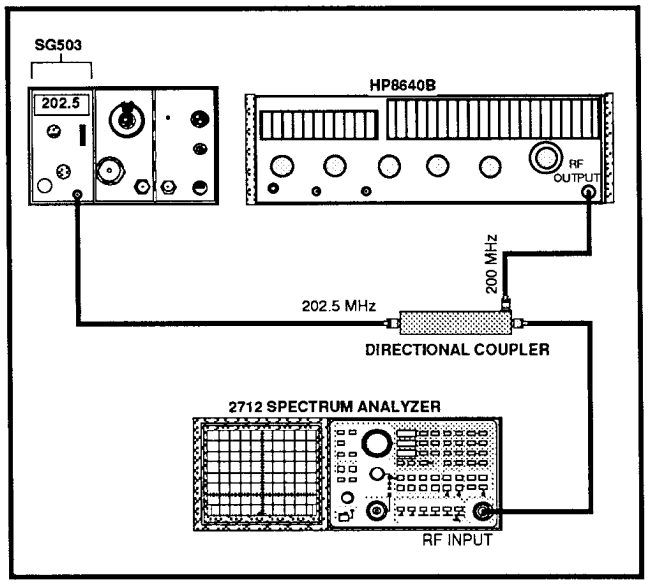

Figure 3-3. 1dB Compression Point Test

f. Set the second signal generator's controls for a full-screen, 202.5 MHz signal.

g. Increase the output amplitude of the second signal generator until the 200 MHz signal on the CRT drops 1 dB.

h. Check that the second signal generator output is ≥–15 dBm.

i. Disconnect the test equipment from the RF INPUT.

18. Check J103 Accessory Connector
(Pin 3: Video Out)
(Pin 6: Sweep Gate)
(Pin 7: Sweep Output)

Equipment Required:

- Test Oscilloscope

a. Recall default power-up settings by pressing UTIL 1 1.

b. Select the following settings on the spectrum analyzer:

FREQUENCY	100 MHz
REFERENCE LEVEL	–30 dBm
SPAN/DIV	1 MHz
RESOLUTION BW	AUTO
VID FLTR	Off
VERTICAL SCALE	10 dB/
DISPLAY STORAGE	OFF

c. Enable the Calibrator by pressing INPUT 9.

d. Disable frequency corrections by pressing UTIL 4 3 5.

e. Monitor Pin 3 of J103 (Figure 3-4) with the test oscilloscope. Set the test oscilloscope sweep rate to 10 ms/Div and volts/Div to .5.

f. Check for a 0 V-to-1.6 V inverted version of the spectrum analyzer display.

g. Monitor Pin 6 of J103 (Figure 3-4) with the test oscilloscope. Set the test oscilloscope sweep rate to 1 ms/Div and volts/Div to 2.

h. Press ZERO SPAN, then press SWEEp ↓ until the readout reads 1MS/.

i. Check for an ≈5 V square wave (Sweep Gate).

j. Monitor Pin 7 of J103 (Figure 3-4) with the test oscilloscope. Set the test oscilloscope volts/Div to .5.

k. Check for a negative-going ramp approximately +1.3 V to –1.3 V.

l. Recall default power-up settings by pressing UTIL 1 1.

m. Connect a 15 Hz, 2 Vp-p, and 0 VDC square wave to pin 1 of J103.

n. Check that the noise on the display is clamped to the bottom of the screen approximately every half a division. The display will not be triggered.

o. Disconnect the test oscilloscope from J103.

19. Check Sweep Rate and Sweep Accuracy

(10% over the center 8 divisions)

Equipment Required:

- Time Mark Generator

a. Recall default power-up settings by pressing UTIL 1 1.

b. Connect the time mark generator to the RF INPUT.

c. Connect the time mark generator trigger output to J102, (EXT TRIG) on the rear panel of the spectrum analyzer.

d. Enable external triggering by pressing SWP/TRIG 2.

e. Set the time mark generator controls for 50 ms time marks, and turn off the spectrum analyzer Video Filter.

f. Select the following settings on the spectrum analyzer:

FREQUENCY	10 MHz
REFERENCE LEVEL	–30 dBm
SPAN/DIV	ZERO
RESOLUTION BW	300 kHz

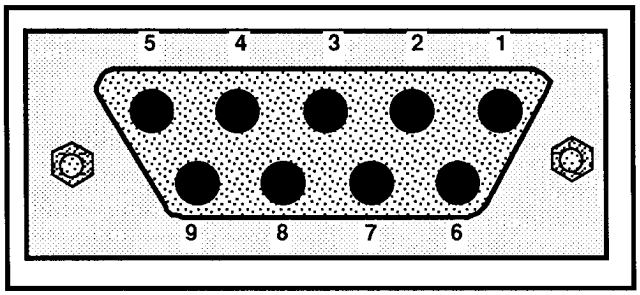

Figure 3-4. Accessories connector J103.

g. It may be necessary to set the Horizontal position potentiometer on the rear panel to align the marks with the graticule. Be sure to return the potentiometer to its original position when done.

h. Check the accuracy of the 2 s to 1 ms sweep timing range by applying appropriate markers for each sweep setting. The error should not exceed ±4 minor divisions measured over the center 8 divisions.

i. Turn off the DISPLAY STORAGE for the 50 µs and faster sweep settings and reset RESOLUTION BW to 5 MHz.

j. Disconnect the time mark generator from the RF INPUT.

20. Check Triggering

(Internal: 1 division or more of signal)
(External: 1.0 V peak minimum)

Equipment Required:

- Function Generator

a. Recall default power-up settings by pressing UTIL 1 1.

b. Select the following settings on the spectrum analyzer:

VERTICAL SCALE	10 dB/
DISPLAY STORAGE	Off
SWEEP RATE	1 ms/DIV

c. Enable external video by pressing DSPL 7. The spectrum analyzer automatically selects ZERO SPAN.

d. Connect a 100 kHz square-wave signal to Pin 1 of J103 on the rear panel of the spectrum analyzer. See Figure 3-4.

e. Set the function generator output for 1 division or less of signal at the top of the screen. Use an external attenuator if necessary.

f. Enable internal triggering by pressing SWP/TRIG 1.

g. Check that the Trigger LEVEL control can be set for a triggered display.

h. Using another cable and T-Adapter, connect the same square-wave source to the EXT TRIG input (J102) on the spectrum analyzer rear panel.

i. Set the generator controls for a 15 Hz, 2 Vp-p signal.

j. Enable external triggering by pressing SWP/TRIG 2.

k. Press SWEEP ↑ until the readout reads 10MS/.

l. Check that the Trigger LEVEL control can be set for a triggered display.

m. Remove the cable from the EXT TRIG input.

n. Enable line triggering by pressing SWP/TRIG 3.

o. Check that the Trigger LEVEL control can be set for a visible display. The display will not be stable.

p. Disconnect all input cables from the rear panel of the spectrum analyzer.

21. Check Internal Calibrator

(–30 dBm ±0.3 dB at 100 MHz ±5 kHz) *(2711 only)*
(–30 dBm ±0.3 dB at 100 MHz ±2 kHz) *(2712 only)*

Equipment Required:

- Leveled Signal Generator
- Frequency Counter
- Power Meter

a. Recall default power-up settings by pressing UTIL 1 1.

b. Select the following settings on the spectrum analyzer:

FREQUENCY	100 MHz
REFERENCE LEVEL	–29 dBm
SPAN/DIV	10 kHz *(2711 only)*
SPAN/DIV	1 kHz *(2712 only)*
RESOLUTION BW	Auto
VID FLTR	On
VERTICAL SCALE	1 dB/div

c. Enable the internal Calibrator signal by pressing INPUT 9.

d. Enable PEAK ACQUISITION MODE by pressing DSPL 4.

e. Press SAVE ENABLE and A to store the internal signal.

f. Disable the internal Calibrator signal by pressing INPUT 9.

g. Connect the output of the leveled signal generator to the frequency counter input through a 3 dB attenuator and a 50 Ω cable. Set the generator output frequency at 100 MHz.

h. Disconnect the leveled signal generator from the frequency counter and connect it to the power meter, through the same 50 Ω cable and 3 dB attenuator. Set the generator output level for a reading of –30 dBm on the power meter.

i. Disconnect the signal generator from the power meter, and connect it to the RF INPUT, through the same 50 Ω cable and 3 dB attenuator.

j. Enable the saved internal signal by pressing A, and compare the saved internal Calibrator signal to the active external signal.

k. Check that the signals are within ±2 kHz (for the 2712) or ±5 kHz (for the 2711) of each other in frequency and ±1.5 minor divisions in amplitude.

l. Discard the stored signal by pressing SAVE ENABLE and A, and disconnect the signal generator from the RF INPUT.

22. Check AM and FM Audio Detectors

Equipment Required:

- Antenna
- Headphones

a. Recall default power-up settings by pressing UTIL 1 1.

b. Connect the antenna to the RF INPUT.

c. Select the following settings on the spectrum analyzer:

SPAN/DIV	2 MHz
RESOLUTION BW	AUTO

d. Tune the spectrum analyzer FREQUENCY to a local FM station.

e. Set the REFERENCE LEVEL for a full-screen signal.

f. Push ZERO SPAN.

g. Select the FM DEMODULATOR by pressing DEMOD/TG 2.

h. Set the LEVEL control for a comfortable listening volume.

i. Plug the headphones into the external speaker jack on the right front side of the spectrum analyzer.

j. Check that the speaker shuts off, and audio is redirected to the headphones.

k. Tune the spectrum analyzer FREQUENCY to an AM station.

l. Select the AM DEMODULATOR by pressing DEMOD/TG 1.

m. Check that the LEVEL control does in fact control the AM audio level.

n. Disconnect the antenna from the RF INPUT and the Headphones from the external speaker jack.

23. Check Residual FM

(≤2 kHz p-p total excursion in 20 ms for non phase-locked operation)
(≤100 Hz p-p total excursion in 20 ms for phase-locked operatin) *(2712 only)*

This check requires a one hour warm-up period.

a. Recall default power-up settings by pressing UTIL 1 1.

b. Select the following settings on the spectrum analyzer:

FREQUENCY	100 MHz
REFERENCE LEVEL	–30 dBm
SPAN/DIV	10 kHz
RESOLUTION BW	3 kHz
VID FILTR	Off
VERTICAL SCALE	10 dB/div
SWEEP	AUTO

c. Enable the Calibrator by pressing INPUT 9.

d. Disable phase lock by pressing UTIL 4 3 4 *(2712 only)*.

e. Enable SINGLE SWEEP.

f. Enable a marker by pressing MKR/Δ/OFF, and tune the marker one division down from the top of the screen on the falling slope of the Calibrator signal.

g. Enable a second marker (Delta Marker) by pressing MKR/Δ/OFF, and tune the marker three divisions down from the top of the screen on the falling slope of the Calibrator signal.

h. Divide the Delta Frequency readout (Upper right readout) by 2. The ratio of the frequency delta to 2 divisions then is the vertical scale factor for this measurement in ZERO SPAN.

i. Disable the markers by pressing MKR/Δ/OFF, then press AUTO SWEEP.

j. Tune the center frequency control to position the trace 2 divisions down from the top of the screen.

k. Activate ZERO SPAN, and reset Time/Div to 2 ms by pressing SWEEP ↓ until the readout indicates 2Ms/.

l. Check that the signal does not move more than ±2 kHz according to the vertical scale factor established in part g.

NOTE: Perform steps m through p for the 2712 only.

m. Enable phase lock by pressing UTIL 4 3 4.

n. Reset the following parameters:

SPAN/DIV	1 kHz
RESOLUTION BW	300 Hz (200 Hz Opt. 12)

o. Repeat parts e through k.

p. Check that the signal does not move more than ±100 Hz according to the vertical scale factor established in part g.

24. Check VSWR

(1.5:1 or better)

Test equipment required:

- VSWR Bridge
- Test Spectrum Analyzer with Tracking Generator

a. Recall default power-up settings by pressing UTIL 1 1.

b. Connect the test equipment as shown in Figure 3-5.

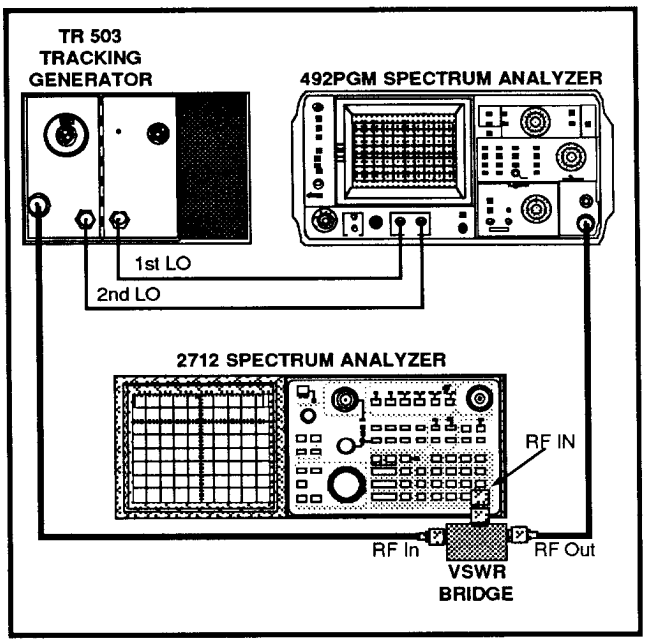

Figure 3-5. Test equipment setup for checking return loss.

c. Select the following settings on the test spectrum analyzer:

Reference Level	0 dBm
Span/Div	Max Span
Vertical Scale	10 dB/div

d. Set the TR503 output level at 0 dBm.

e. Disconnect the cable from the RF INPUT and press B– Save A on the test spectrum analyzer. A straight line will be at mid-screen. This is the reference trace.

f. Reconnect the cable to the RF INPUT and set the REFERENCE LEVEL to –20 dBm.

f. A frequency response waveform will be displayed on the test spectrum analyzer.

g. Check that this waveform is ≥1.5 divisions down from the reference trace across the entire band.

25. Check Signal Track

a. Recall default power-up settings by pressing UTIL 1 1.

b. Select the following settings on the spectrum analyzer:

FREQUENCY	100 MHz
REFERENCE LEVEL	–20 dBm
SPAN/DIV	100 kHz
RESOLUTION BW	AUTO
VID FLTR	Off
VERTICAL SCALE	5 dB/

c. Enable the Calibrator by pressing INPUT 9.

d. Press CTR-MEAS/TRKG twice.

e. Check that the letters TRKG appear at center screen. (2711 requires Option 02.)

f. Tune the signal away from the center of the screen.

g. Check that the signal returns to the center of the screen.

26. GPIB (2711 requires Option 03)

Test equipment required:

- IBM PC/AT or Compatible, Hard Disk highly recommended
- DOS Operating System
- Microsoft QuickBASIC Programming Language
- Tek GURU II GPIB Interface Package, Tektronix Part Number S3FG210 for National Instruments PCII/IIA board.
- GPIB Interconnect Cable, Tektronix Part Number 012-0991-01
- 2711 & 2712 Programmer Manual, Tektronix Part Number 070-8132-01

Refer to Section 1 of the 2711 & 2712 Programmer manual for all instructions for verifying the operation of the GPIB Interface. Included in the manual are several program listings that can be used to exercise the instrument.

27. Check RS-232 Port (Option 08)

Test equipment required:

- IBM PC/AT or Compatible
- RS-232 Interconnect Cable, Tektronix Part Number 012-1379-00

a. Connect the computer to J104 on the spectrum analyzer rear panel and run the terminal program.

b. Enable the RS-232 Communications Port by pressing UTIL 4 0 2 0.

c. Enable the MAIN PORT INPUT TEST by pressing BKSP three times; then press 5 6 2 4.

d. Any character typed on the keyboard will show up next to the RX: readout on the spectrum analyzer screen.

e. Press 5 and the spectrum analyzer will print out a message on the computer screen what is displayed on the screen.

OPTIONS

28. Option 04 (Tracking Generator)

a. Check Frequency Range
(100 kHz to 1.8 GHz)

(1) Recall default power-up settings by pressing UTIL 1 1.

(2) Connect the TG OUTPUT to the RF INPUT.

(3) Select the following settings on the spectrum analyzer:

FREQUENCY	1 GHz
REFERENCE LEVEL	+10 dBm
SPAN/DIV	MAX SPAN
RESOLUTION BW	AUTO
VERTICAL SCALE	10dB/

(4) Set the TG OUTPUT at 0 dBm by pressing DEMOD/TG 5 and entering 0 dBm. Press keypad 4 to enable the tracking generator.

(5) Check that the spectrum analyzer displays a sweep signal from 100 kHz to at least 1.8 GHz with a level of approximately 0 dBm.

b. Check Tracking (Frequency Offset)
(Typically –5 kHz to + 60 kHz)

Test equipment required:

- Test Spectrum Analyzer

(1) Recall default power-up settings by pressing UTIL 1 1.

(2) Monitor the TG OUTPUT with the test spectrum analyzer.

(3) Select the following setting on the test spectrum analyzer:

Center Frequency	900 MHz
Reference Level	0 dBm
Span/Div	20 kHz
Resolution Bandwidth	1 kHz

(4) Select the following settings on the spectrum analyzer:

FREQUENCY	900 MHz
SPAN/DIV	10 kHz *(2711 only)*
SPAN/DIV	1 kHz *(2712 only)*
RESOLUTION BW	AUTO

(5) Set the TG OUTPUT level at 0 dBm by pressing DEMOD/TG 5 and entering 0 dBm. Press keypad 4 to enable the tracking generator.

(6) Enable TG TRACKING by pressing DEMOD/TG 7. Press any menu button to exit the menu; then tune the FREQ/MARKERS knob such that the tracking readout (lower right corner of system display) reads 0 Hz.

(7). Press SGL SWEEP on the spectrum analyzer. Center the display on the test spectrum analyzer with the center frequency control knob; then save the display (in the test spectrum analyzer).

(8) Vary the FREQ/MARKERS control clockwise until the system beeps and indicates "OUT OF RANGE."

(9) Check that the signal on the test spectrum analyzer display has moved three divisions to the right of the center position.

(10) Reset the test spectrum analyzer Span/Div to 5 kHz.

(11) Tune the FREQ/MARKERS knob until the tracking readout reads 0 Hz.

(12) Press SGL SWEEP on the spectrum analyzer. Center the display on the test spectrum analyzer with the center frequency control knob; then save the display (in the test spectrum analyzer).

(13) Vary the FREQ/MARKERS control counter-clockwise until the system beeps and indicates "OUT OF RANGE."

(14) Check that the signal on the test spectrum analyzer has moved one division to the left of the center position.

(15) Disconnect the test spectrum analyzer from the TG OUTPUT.

c. Check Output Level Range and Accuracy
(Range: –48 dBm to 0 dBm)
(Accuracy: ±1.5 dB at 100 MHz)

Test equipment required:

- Power Meter

NOTE

This check step requires two power sensors; one to measure a level approximately –48 dBm and the other to measure a level approximately 0 dBm. The low power sensor must be calibrated using a precision 30 dB attenuator such as a Weinschel Model 50 - 30.

CAUTION

Be sure to turn the power meter off before removing or connecting a power sensor.

(1) Recall default power-up settings by pressing UTIL 1 1.

(2) Select the following settings on the spectrum analyzer:

FREQUENCY	100 MHz
REFERENCE LEVEL	–30 dBm
SPAN/DIV	ZERO
SWEEP RATE	AUTO
TG FIXED LEVEL	0 dBm
TG VARIABLE LEVEL	OFF
TG TRACKING	OFF
TRACKING GENERATOR	ON

(3) Connect the TG OUTPUT to the power meter using the high-power power sensor.

(4) Check that the power meter indicates –48 dBm, ±1.5 dB.

(5) Reset the TG OUTPUT level to –4 dBm by pressing DEMOD/TG 5 and entering –4 dBm.

(6) Check that the power meter reads –4 dBm, ±1.5 dB.

(7) Continue decreasing the TG OUTPUT level in 4 dB steps to –48 dBm while checking the power meter reading at each level to within 1.5 dB of the selected level.

NOTE

Turn off the power meter and replace the high-power power sensor with the low-power power sensor after the –20 dBm step; then turn the power meter back on.

d. Check VSWR
(10 dB or better with output Level ≤–8 dBm)

Test equipment required:

- VSWR Bridge
- Test Spectrum Analyzer with Tracking Generator (Tektronix 492PGM and TR503)

(1) Recall default power-up settings by pressing UTIL 1 1.

(2) Connect the test equipment as shown in Figure 3-6.

(3) Select the following settings on the test spectrum analyzer:

Span/Div	Max Span
Reference Level	0 dBm
Vertical Scale	10 dB/div

(4) Disconnect the cable from the 2712 TG OUTPUT connector, and press B–SAVE A on the test spectrum analyzer. The resultant display, a flat line at mid-screen, is the measurement reference on the test spectrum analyzer.

(5) Set the TR503 Tracking Generator output level at 0 dBm.

(6) Reconnect the cable to the TG OUTPUT.

(7) Press DEMOD/TG 5 and enter –8 dBm (enables 8 dB of attenuation at the tracking generator output).

(8) Check that the displayed response on the test spectrum analyzer is ≥1 division down from the reference established in part 3. Ignore the spur that appears at the center frequency of the spectrum analyzer.

(9) Disconnect the test equipment from the RF INPUT.

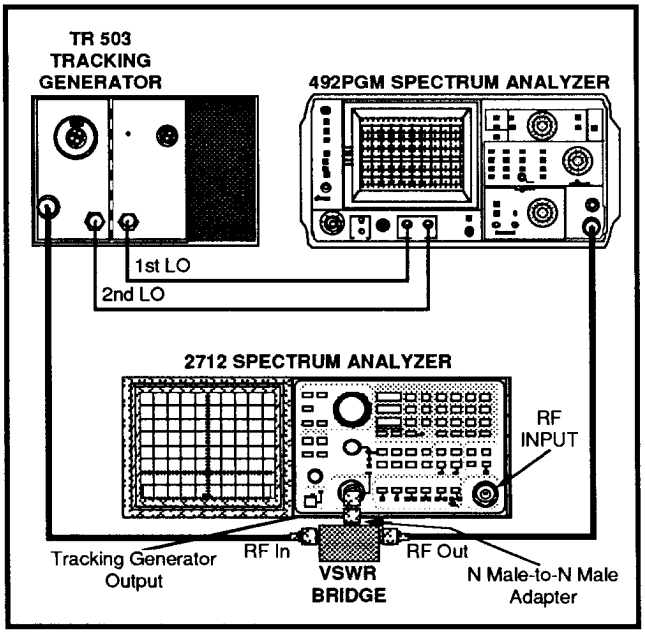

Figure 3-6. Test setup for measuring return loss.

e. Check Tracking Generator Flatness
(±1 dB from 100 kHz to 1.0 GHz and ±1.5 dB to 1.8 GHz)

Test equipment required:

- Power Meter
- Test Oscilloscope

(1) Recall default power-up settings by pressing UTIL 1 1.

(2) Connect the test equipment as shown in Figure 3-7.

(3) Select the following settings on the spectrum analyzer:

FREQUENCY	500 MHz
REFERENCE LEVEL	0 dBm
SPAN/DIV	100 MHz
RESOLUTION BW	AUTO
VERTICAL SCALE	1 dB/
TG FIXED LEVEL	0 dBm
TG VARIABLE LEVEL	OFF
TG TRACKING	OFF
TRACKING GENERATOR	ON

(4) Set up the test oscilloscope for X–Y operation. The sweep signal from pin 7 of J104 drives the X-axis and the tracking generator output (Recorder Output) drives the Y-axis. Set the Y-axis deflection factor (V/Div and Variable) for full horizontal deflection.

(5) Enable manual sweep on the spectrum analyzer/tracking generator system by pressing SWP/TRIG 7.

(6) Manually sweep the spectrum analyzer slowly from 100 kHz to 1 GHz. Make a note of the highest and lowest points on the flatness trace as read on the power meter.

(7) Check that the difference in amplitude between the highest and lowest points on the flatness trace, excluding the start spur, is ≤2 dB.

(8) Reset the FREQ SPAN/DIV to MAX SPAN. Manually sweep the spectrum analyzer slowly from 100 kHz to 1.8 GHz. Make a note of the highest and lowest points on the flatness trace.

(9) Check that the difference in amplitude between the highest and lowest points on the flatness trace is ≤3 dB from 100 kHz to 1.8 GHz.

(10) Disconnect the test equipment from the spectrum analyzer.

f. Check System Flatness
(±2.5 dB from 100 kHz to 1.0 GHz and 3 dB to 1.8 GHz)

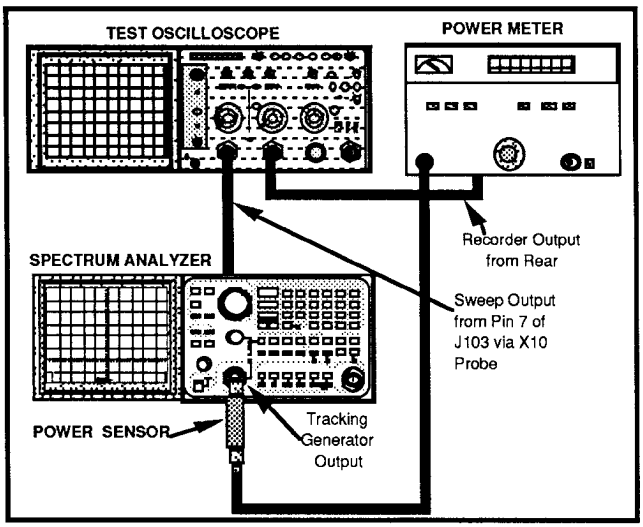

Figure 3-7. Test setup for measuring Tracking Generator flatness.

(1) Recall default power-up settings by pressing UTIL 1 1.

(2) Select the following settings on the spectrum analyzer:

FREQUENCY	500 MHz
REFERENCE LEVEL	–20 dBm
SPAN/DIV	MAX SPAN
RESOLUTION BW	AUTO
VERTICAL SCALE	1DB/
SWEEP	AUTO
TG FIXED LEVEL	–20 dBm
TG VARIABLE LEVEL	OFF
TG TRACKING	OFF
TRACKING GENERATOR	ON

(3) Connect the TG OUTPUT to the RF INPUT.

(4) Enable manual sweep on the spectrum analyzer/tracking generator system by pressing SWP/TRIG 7.

(5) Manually sweep the spectrum analyzer slowly from 100 kHz to 1 GHz. Make a note of the highest and lowest points on the flatness trace from 100 kHz to 1.0 GHz. Ignore the start spur.

(6) Check that the difference in amplitude between the highest and lowest points from 100 kHz to 1.0 GHz on the flatness trace, excluding the start spur, is ≤5 dB.

(7) Manually sweep the spectrum analyzer slowly from 100 kHz to 1.8 GHz. Make a note of the highest and lowest points on the flatness trace from 100 kHz to 1.8 GHz. Ignore the start spur.

(8) Check that the difference in amplitude between the highest and lowest points from 100 kHz to 1.8 GHz on the flatness trace, excluding the start spur, is ≤6 dB.

g. Check Characterized Flatness
(±0.2 dB)

(1) Recall default power-up settings by pressing UTIL 1 1.

(2) Connect the TG OUTPUT to the RF INPUT.

(3) Select the following settings on the spectrum analyzer:

SPAN/DIV	MAX SPAN
RESOLUTION BW	AUTO
VERTICAL SCALE	1 dB/
TG FIXED LEVEL	0 dBm
TG VARIABLE LEVEL	OFF
TG TRACKING	OFF
TRACKING GENERATOR	ON

(4) Set the reference for a visible display (≈2 dBm).

(5) Enable single sweep on the spectrum analyzer by pressing SINGLE SWEEP. Press SINGLE SWEEP again to initiate a sweep.

(6) Store the single sweep waveform in Register A by pressing SAVE and then A.

(7) Enable the B display and ensure that all other displays are disabled.

(8) Enable B, C MINUS A by pressing DSPL 2.

(9) Initiate a single sweep on the spectrum analyzer by pressing SINGLE.

(10) Check for a flat trace across the screen. The trace flatness must be within a minor division (±0.2 dB). Ignore the start spur and switching transients.

h. Check Spurious Signals
(Harmonic: –20 dBc or better)
(Non-Harmonic: –35 dBc or better)

Test equipment required:

- Test spectrum analyzer (Tektronix 492PGM)

(1) Recall default power-up settings by pressing UTIL 1 1.

(2) Select the following settings on the spectrum analyzer:

FREQUENCY	100 kHz
SPAN/DIV	ZERO SPAN
TG FIXED LEVEL	0 dBm
TG VARIABLE LEVEL	OFF
TG TRACKING	OFF
TRACKING GENERATOR	ON

(3) Monitor the TG OUTPUT with the test spectrum analyzer.

(4) Select the following settings on the test spectrum analyzer:

Frequency	500 kHz
Reference Level	0 dBm
Freq Span/Div	100 kHz
Resolution BW	Auto
Vertical Scale	10 dB/Div
Min Noise	On
Peak Average	Fully counter-clockwise
Sweep Rate	Auto

(5) The test spectrum analyzer will display harmonic spurs approximately one division apart. The signal at the left graticule line is the start spur (0 Hz), the signal to the right of the start spur is the fundamental, and all signals to the right of the fundamental signal are harmonic spurs. See Figure 3-8.

(6) Check that the harmonic spurs are at least 20 dB down from the fundamental.

(7) Reset the test spectrum analyzer span/div to Max Span, and enable MAX SPAN on the spectrum analyzer/tracking generator system.

(8) On the spectrum analyzer/tracking generator system, enable MANUAL SCAN by pressing SWP/TRIG 7.

(9) Manually sweep the spectrum analyzer/tracking generator system slowly from 100 kHz to 1.8 GHz while observing the test spectrum analyzer display. The high signal moving from left to right as the system is manually swept is the fundamental. Ignore other signals that move from left to right. Signals that move from right to left are non-harmonic spurs.

(10) Check that all non-harmonic spurs are at least 35 dB down from the fundamental.

(11) Disconnect the test spectrum analyzer from the TG OUTPUT.

i. Check System Dynamic Range
(≥100 dB)

(1) Recall default power-up settings by pressing UTIL 1 1.

(2) Select the following settings on the spectrum analyzer:

FREQUENCY	100 MHz
SPAN/DIV	20 kHz
RESOLUTION BW	3 kHz
VERTICAL SCALE	10 dB/
SWEEP RATE	AUTO
TRACKING GENERATOR	ON
TG FIXED LEVEL	0 dBm
TG VARIABLE LEVEL	OFF
TG TRACKING	ON

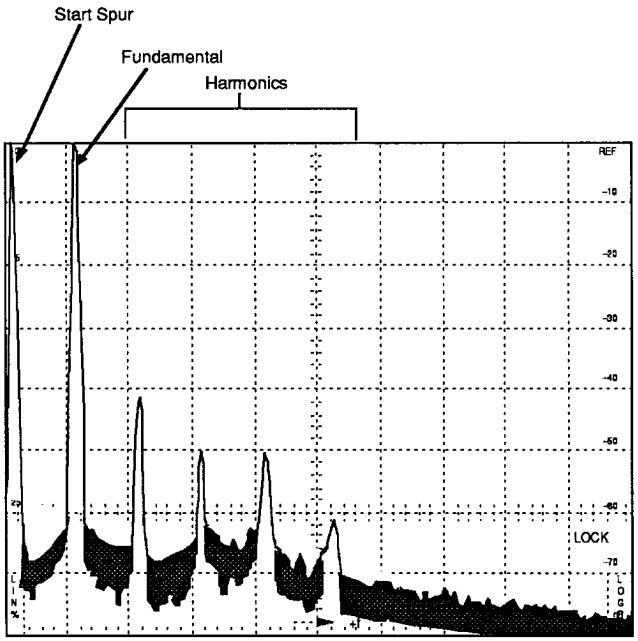

Figure 3-8. Harmonic spur distribution near the 100 kHz fundamental (10 dB/div display).

(3) Connect the TG OUTPUT to the RF INPUT.

(4) Tune the FREQ/MKRS knob to peak the response on the screen (maximum amplitude).

(5) Remove the cable from the TG OUTPUT and the RF INPUT, and terminate these connectors in 50 Ω.

(6) Reset the REFERENCE LEVEL to –40 dBm and enable MAX SPAN.

(7) Check that the displayed noise floor is ≤–100 dBm.

29. Check Video Monitor Mode and TV Line Triggers (Option 10)

a. Recall default power-up settings by pressing UTIL 1 1.

b. Select the following settings on the spectrum analyzer:

FREQUENCY	1038.4 MHz
REFERENCE LEVEL	–60 dBm
SPAN/DIV	2 MHz
RESOLUTION BW	AUTO

c. Enable the PREAMP by pressing INPUT 1.

d. Connect a satellite feed to the RF INPUT.

e. Reset the REFERENCE LEVEL for a ful-screen display.

f. Enable SATELLITE VIDEO DETECT MODE by pressing DEMOD/TG 9 0.

g. Enable SATELLITE VIDEO by pressing BKSP and 3.

h. Check that the front-panel LEVEL control can be set for a full-screen picture.

i. Disconnect the satellite feed from the RF INPUT and connect a broadcast antenna feed in its place.

j. Select the following settings on the spectrum analyzer:

FREQUENCY	Visual Carrier
REFERENCE LEVEL	–30 dBm
SPAN/DIV	100 kHz
RESOLUTION BW	5 MHz
VID FLTR	Off
VERTICAL SCALE	LIN

k. Turn off SATELLITE VIDEO by pressing DEMOD/TG 3.

l. Reset the REFERENCE LEVEL for a ful-screen display.

m. Enable BROADCAST VIDEO DETECT MODE by pressing DEMOD/TG 9 0.

n. Enable BROADCAST VIDEO by pressing BKSP and 3.

o. Set the front-panel LEVEL control for a full-screen picture.

p. Turn off BROADCAST VIDEO by pressing DEMOD/TG 3.

q. Set the FREQ/MKRS knob function to video line selector by pressing SWP/TRIG 9 1. Press any menu button to exit the menu.

r. Enable ZERO SPAN and turn off DISPLAY STORAGE.

s. Use the FREQ/MKRS knob to select video line 17 (VID LINE readout indicates VID LINE 17).

t. Check that the spectrum analyzer displays the test waveform shown in Figure 3-9. The test signal amplitude may be different.

30. Check Option 12 (Quasi-Peak Detector) *(2712 only)*

Test equipment required:

- Two Function Generators (FG5010)
- TM 5000- Series Power module

a. Recall default power-up settings by pressing UTIL 1 1.

b. Connect the test equipment as shown in Figure 3-10 (generator #1 Trig Output to generator #2 Trigger/Gate In, and generator #2 Output to spectrum analyzer RF INPUT).

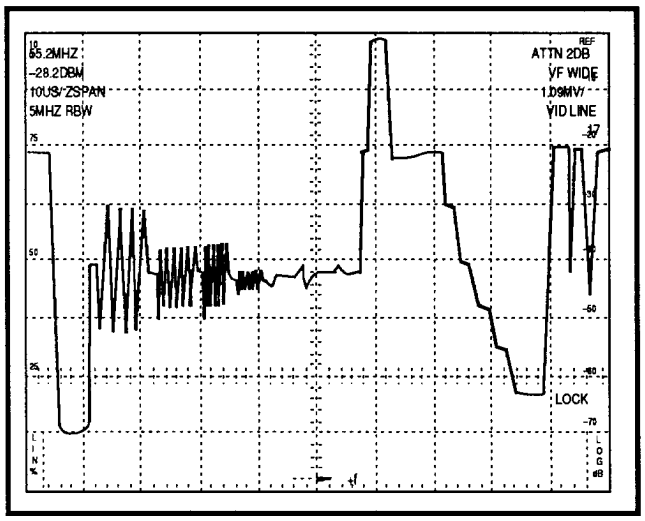

Figure 3-9. Test signal on video line 17.

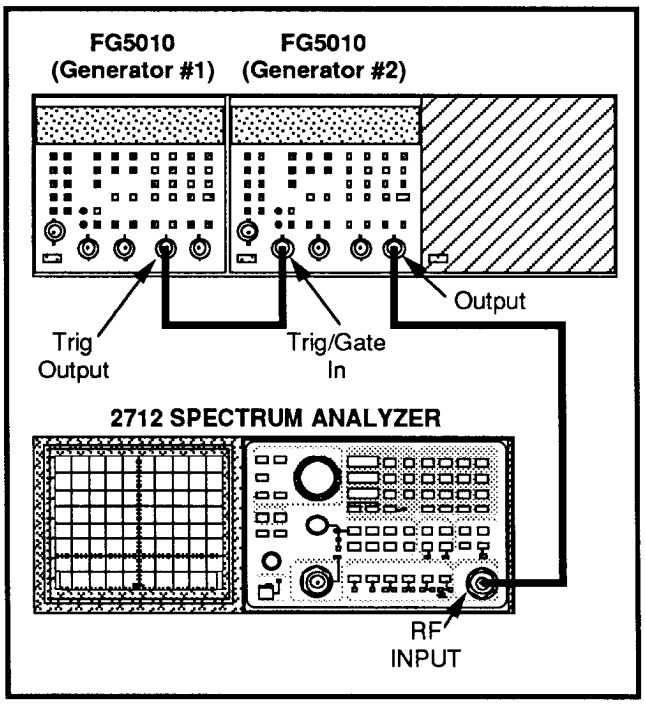

Figure 3-10. Test setup for checking the Quasi-Peak detector.

c. Set generator #1 frequency to 25 Hz.

d. Select the following settings on generator #2:

Function	Square
Mode	Trig
Frequency	25 kHz
Amplitude	5 V
Output	On

e. Select the following settings on the spectrum analyzer:

FREQUENCY	75 kHz
REFERENCE LEVEL	–20 dBm
SPAN/DIV	5 kHz
RESOLUTION BW	200 Hz
VERTICAL SCALE	5 dB/Div

f. Enable the EMC Mode by pressing APPL 5. Press any menu button to exit the menu.

a. Check Band A

(1) Press PEAK FIND, CTR-MEAS/TRKG, and ZERO SPAN.

(2) Make a note of the displayed signal amplitude.

(3) Enable the Quasi-Peak Detector by pressing APPL 6. Press any menu button to exit the menu.

(4) Check that the displayed signal amplitude is 3 dB to 9 dB less than the amplitude noted in part (2). Make a note of the amplitude.

(5) Change the frequency of generator #1 to 10 Hz.

(6) Check that the displayed signal amplitude is 1 dB to 7 dB less than the amplitude noted in part (4).

(7) Change the frequency of generator #1 to 5 Hz.

(8) Check that the amplitude of the signal is 4 dB to 11 dB less than the amplitude noted in part (4).

(9) Change the frequency of generator #1 to 60 Hz.

(10) Check that the amplitude of the signal is 0 dB to 6 dB greater than the amplitude noted in part (4).

b. Check Band B

(1) Disable the Quasi-Peak Detector by pressing APPL 6. Press any menu button to exit the menu.

(2) Set the frequency of generator #1 to 100 Hz.

(3) Select the following settings on generator #2:

Frequency	500 kHz
Amplitude	2 V

(4) Select the following settings on the spectrum analyzer:

FREQUENCY	15.5 MHz
REFERENCE LEVEL	–60 dBm
SPAN/DIV	100 kHz
RESOLUTION BW	9 kHz
VERTICAL SCALE	5 dB/

(5) Press PEAK FIND, CTR-MEAS/TRKG, and ZERO SPAN.

(6) Make a note of the displayed signal amplitude.

(7) Enable the Quasi-Peak Detector by pressing APPL 6. Press any menu button to exit the menu.

(8) Check that the amplitude of the signal is 2 dB to 8 dB less than the amplitude noted in part (6). Make a note of this Amplitude.

(9) Change the frequency of generator #1 to 20 Hz.

(10) Check that the amplitude of the signal is 3.5 dB to 9.5 dB less than the amplitude noted in part (8).

(11) Change the frequency of generator #1 to 10 Hz.

(12) Check that the amplitude of the signal is 6.5 dB to 13.5 dB less than the amplitude noted in part (8).

(13) Change the frequency of generator #1 to 1 kHz.

(14) Check that the amplitude of the signal is 1.5 dB to 7.5 dB greater than the amplitude noted in part (8).

c. Check Bands C and D

(1) Disable the Quasi-Peak Detector by pressing APPL 6. Press any menu button to exit the menu.

(2) Set the frequency of generator #1 to 100 Hz.

(3) Select the following settings on generator #2:

Frequency	20 MHz
Amplitude	5 V

(4) Select the following settings on the spectrum analyzer:

FREQUENCY	60 MHz
REFERENCE LEVEL	–35 dBm
SPAN/DIV	5 MHz
RESOLUTION BW	120 kHz
VERTICAL SCALE	5 dB/Div

(5) Press PEAK FIND, CTR-MEAS/TRKG, and ZERO SPAN.

(6) Make a note of the displayed signal amplitude.

(7) Enable the Quasi-Peak Detector by pressing APPL 6. Press any menu button to exit the menu.

(8) Check that the amplitude of the signal is 12 dB to 18 dB less than the amplitude noted in step (6). Make a note of this amplitude.

(9) Change the frequency of generator #1 to 20 Hz.

(10) Check that the amplitude of the signal is 6 dB to 12 dB less than the amplitude noted in part (8).

(11) Change the frequency of generator #1 to 1 kHz.

(12) Check that the amplitude of the signal is 5 dB to 11 dB greater than the amplitude noted in part (8).

(13) Change the frequency of generator #1 to 10 kHz.

(14) Check that the amplitude of the signal is 9 dB to 15 dB greater than the amplitude noted in part (8).

31. Check Option 15 (1st LO Output Level)

(≥0 dBm)

NOTE

This check applies only to those spectrum analyzers equipped with Option 15.

Test equipment required:

- Power Meter

a. Remove the 50 Ω terminator from J101 at the spectrum analyzer rear panel.

b. Monitor J101 with the power meter.

c. Select the following settings on the spectrum analyzer:

SPAN/DIV	MAX SPAN
RESOLUTION BW	AUTO

d. Enable MANUAL SCAN by pressing SWP/TRIG 7.

e. Manually sweep the spectrum analyzer/tracking generator system slowly from 100 kHz to 1.8 GHz.

f. Check that the power meter indicates a power level of at least 0 dBm over the full span.

g. Disconnect the power meter from J101 and replace the 50 Ω terminator.

ADJUSTMENT

Introduction

If the instrument performance is not within tolerance for a particular characteristic, determine the cause, repair if necessary, then use the appropriate adjustment procedure to return the instrument operation to performance specification. After any adjustment, verify performance by repeating the applicable part of the Performance Check.

Allow the instrument to warm up for at least 15 minutes, in an ambient temperature of 20° C to 30° C before making any adjustments. Waveform illustrations in the adjustment procedure are typical and may differ from one instrument to another. These waveforms should not be construed as being representative of specification tolerances.

CAUTION

STATIC DISCHARGE CAN DAMAGE MANY SEMICONDUCTOR COMPONENTS USED IN THIS INSTRUMENT.

Many semiconductor components, especially MOS types, can be damaged by static discharge. Damage may not be catastrophic and, therefore, not immediately apparent. It usually appears as a degradation of the semiconductor characteristics. Devices that are particularly susceptible are: MOS, CMOS, JFETs, and high impedance operational amplifiers (FET input stages.) The damaged parts may operate within accepted limits over a short period, but their reliability will have been severely impaired. Damage can be significantly reduced by observing the following precautions.

1. Handle static-sensitive components or circuit assemblies at or on a static-free surface. Work station areas should contain a static-free bench cover or work plane such as conductive polyethylene sheeting and a grounding wrist strap. The work plane should be connected to earth ground.

2. All test equipment, accessories, and soldering tools should be connected to earth ground.

3. Minimize handling by keeping the components in their original containers until ready for use. Minimize the removal and installation of semiconductors from their circuit boards.

4. Hold the IC devices by the body rather than the terminals.

5. Use containers made of conductive material or filled with conductive material for storage and transportation. Avoid using ordinary plastic containers. Any static sensitive part or assembly (circuit board) that is to be returned to Tektronix, Inc., should be packaged in its original container or one with anti-static packaging material.

Recommended Test Equipment

Table 4-1 lists test equipment and test fixtures recommended for the adjustment procedure. The characteristics specified are the minimum required for the checks. Substitute equipment must meet or exceed these characteristics.

Table 4-1
EQUIPMENT REQUIRED

Test Equipment	Characteristics	Recommendation
High Voltage Test Probe	Voltage Range: 1 kV to 40 kV Input Resistance: 1000 MΩ Division Ratio: 1000:1	Fluke Model 80K-40 H.V. Probe
Signal Generator	Frequency Range: 10 kHz to 1000 MHz Amplitude Range : –60 dBm to +6 dBm Accuracy: ±1 dB	Marconi 2022 Frequency Synthesizer
BNC Male to SMB Male Coaxial Cable		Tektronix Part No. 012-0114-00

Table 4-1 (Continued)

Test Equipment	Characteristics	Recommendation
Isolation Transformer	At least 500 VA	Stancor GIS21000
Spectrum Analyzer	Frequency range at least 2 GHz to 4 GHz	TEKTRONIX 492PGM
Test Oscilloscope	Deflection Factor: 2 mV/Div to 5 V/Div; Bandwidth: DC to 100 MHz, and X-Y display capability	TEKTRONIX 2236A-Series Oscilloscope and P6108A X10 Probes
Multimeter	100 mV to 350 VDC	TEKTRONIX DM 501A or DM 502A with TM 500-Series Power module
Sweep/Signal Generator	Output: 0 dBm to +13 dBm Spectral Purity: 25 dB or more below the fundamental	Hewlett Packard 8350B with 11869A Adapter for 86222A Plug-in
Signal Generator	Frequency range of 500 kHz to at least 100 MHz (CW), and capable of 80 kHz peak deviation FM at 100 MHz	Hewlett Packard 8640B
10 dB and 1 dB Step Attenuators	Range: 110 dB in combination 10 dB and 1 dB steps Accuracy: ±0.1 dB Frequency Range: 0 to 1.8 GHz	Hewlett Packard 355C and 355D, calibrated using precision standard attenuators such as Weinschel Model AS-6
Function or Sine-Wave Generator	1 Hz to 1 MHz; 0 to 20 Vp-p	TEKTRONIX FG 503 Function Generator with TM 500-Series Power module
Power Meter with Power Sensors	–30 dBm to +20 dBm full scale; 100 kHz to 4.2 GHz	Hewlett Packard Model 436A with 8482A and 8484A Sensors
Time Mark Generator	1 µs markers; accuracy 0.001%	TEKTRONIX TG 501 with TM 500-Series Power module
Tracking Generator	Frequency range, 100 kHz to 1.8 GHz	TEKTRONIX TR503
N Male to N Male Coaxial Cable		Tektronix Part No. 012-0114-00
N Male to SMA Male Adapter		Tektronix Part No. 015-0369-00
50 Ω Semi-rigid Cable		Tektronix Part No. 175-4542-00
50 Ω BNC Male to Square Pin Female Cable		Tektronix Part No. 175-2140-00
SMA Female to Female Adapter		Tektronix Part No. 015-1012-00
Two Attenuators with BNC Connectors	6 dB (2X); DC to 2 GHz; 50 Ω	Tektronix Part No. 011-0069-02
Test Cable	9-pin RS-232 male connector to one square pin connector	Must be assembled; see Figure 4-19
Special Test Probe		Must be constructed; see Figure 4-16
300 Hz Extender card *(2712 only)*		Tektronix Part No. 671-1429-00
Frequency Standard	100 MHz	Oscillator with an accuracy of 1 X 10^{-9} (WWV Receiver in the USA)

ADJUSTMENT PROCEDURE

PREPARATION

Remove the cabinet as follows:

1. Turn the power off and remove the power cord.

2. Set the instrument on its face with the front cover installed.

3. Remove the rear cover (two T15 Torx® head screws), two (front) top and bottom feet (four T15 screws), three pan-head screws from the bottom rear, and two pan-head screws from the top rear of the instrument.

4. Pull the cover up and off.

5. Remove the plastic safety cover from over the Power Supply board.

1. Adjust Power Supply and Deflection
Instrument with serial number B029999 and earlier.
Adjust R639, R669, R680, R703, R704, R705, R900, and R930 on the Power Supply board and R6, R7, and R110 on the rear panel.
For instrument with serial number B030000 and later the procedure starts on page 4-5A.

Test equipment required:

- Voltage-Variable Isolation Transformer
- Test Oscilloscope with probes
- Multimeter
- High-Voltage Probe (X1000)

WARNING

Use an isolation transformer when working on the Power Supply. The transformer must have a three-wire input and output connector with ground through the input and output. Stancor GIS21000 is an example of a suitable transformer.

Hazardous line potential exists on the Power Supply board at all times the instrument power cord is connected. If it becomes necessary to remove the shield on the bottom of the Power Supply board, use extreme caution when handling the instrument.

Refer to Figure 4-1 for the location of most adjustments and test points.

a. Connect an isolation transformer in line with the spectrum analyzer power input and connect the transformer primary to the mains source. The mains voltage should be within a range of 90 VAC to 250 VAC.

b. Apply power to the spectrum analyzer and turn on the graticule lights (DSPL 6).

c. Adjust R937 (+5 V ADJ) on the Power Supply board for +5.0 VDC at the +5 V test point.

d. Set the test oscilloscope controls as follows:

Channel 1

Coupling	AC
Deflection Factor	20 mV V/div

Trigger: Channel 1, positive edge

Time Base: 5 µs/div

e. Place the Channel 2 probe near R680 on the Power Supply board. The test oscilloscope should display approximately four periods of the waveform at TP250.

f. Adjust R680 (LOCK) so that the waveform on TP270 is locked to the waveform on TP250. An unlocked waveform exhibits a noticeable amount of jitter. When the waveform locks, a sudden shift of the waveform occurs and the jitter goes away. Continue adjusting R680 counter-clockwise until lock is lost or the potentiometer is fully counter-clockwise. Make a note of the range through which the signal stays locked. Center R680 in the noted range.

NOTE

The waveform at TP270 has phase jitter due to pulse-width modulation.

g. Vary the mains voltage from 90 VAC to 240 VAC while checking for no loss of lock. Readjust R680 if lock is lost. Reset the mains voltage to nominal mains voltage.

h. Enable the checkerboard pattern by pressing UTIL 5 2 2 and set INTENSITY fully clockwise.

i. Set R703 (Z-AXIS) on the Power Supply board fully counter-clockwise.

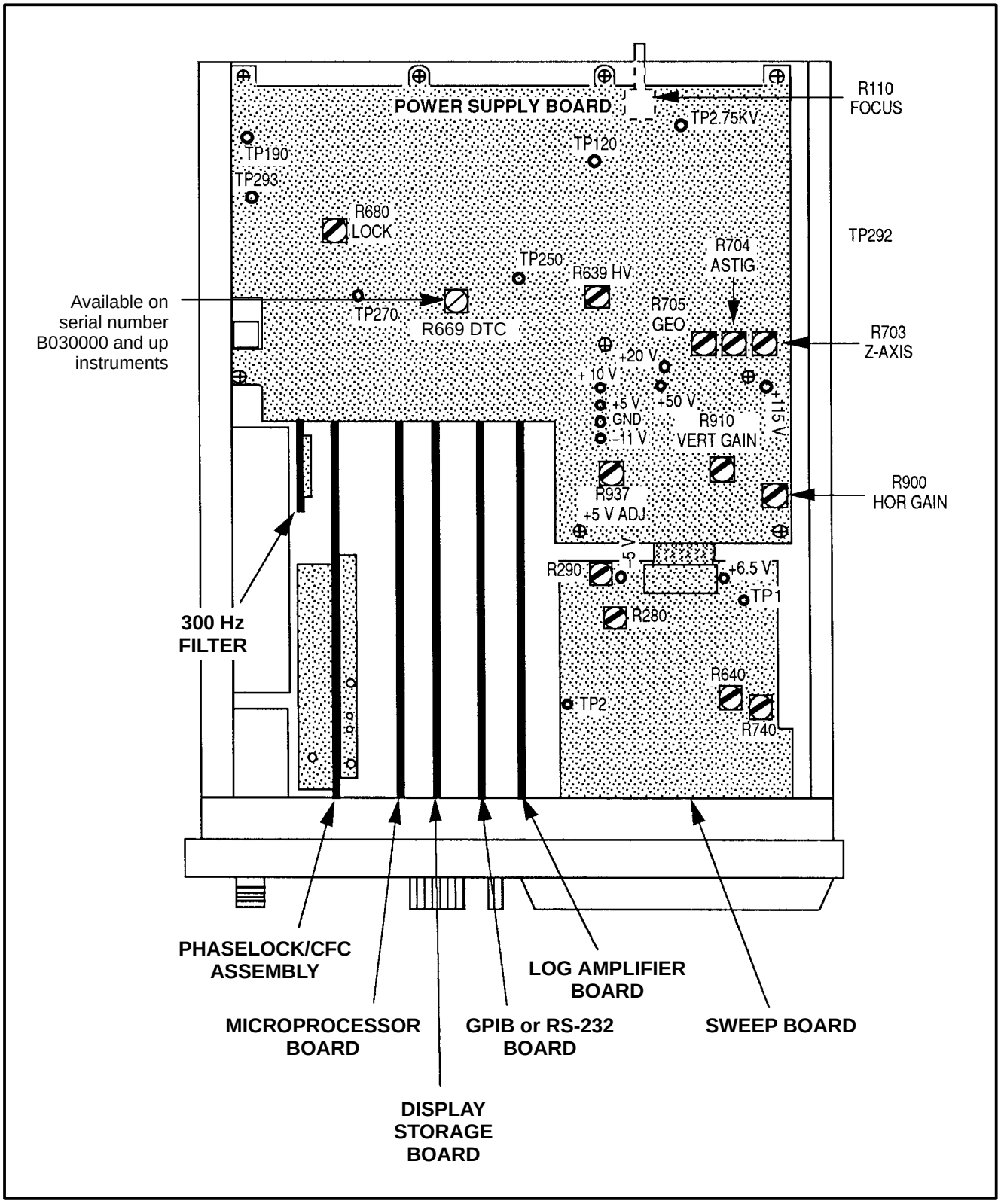

Figure 4–1. Adjustment and test point locations on the Power Supply and Sweep boards.

j. Check the following power supplies:

Power Supply	Voltage Range
–11 V	–10.2 V to –11 V
+5 V	±0 V
+10 V	+10.0 V to +10.8 V
+20 V	+21 V to +24 V
+50 V	+47 V to +51 V
+115 V	+109 V to +117 V

k. Monitor TP120 with the Multimeter and –2.75 kV test point with the High-Voltage Probe.

l. Adjust R639 (HV) on the Power Supply board for –2750 V ± 5 V at the –2.75 kV test point. The DC level at TP120 should lie between 50 V and 250 V.

NOTE

The signal at TP120 is a 20 V triangle waveform with a DC component. The DC component should lie between 50 V and 250 V after R639 is adjusted.

m. Press UTIL five times to return the display to the spectral display mode. Set INTENSITY fully counter-clockwise.

n. Adjust R703 (Z-AXIS) on the Power Supply board until the display just disappears (no beam current).

o. Set R110 (FOCUS) on the Power Supply board fully clockwise.

p. Adjust R704 (AST) on the Power Supply board for as round a dot as possible.

q. Adjust R110 (FOCUS accessible from the rear panel) on the Power Supply board for the sharpest display.

r. Enable the DEFLECTION AMP CAL signal by pressing UTIL 5 2 1. Press any menu button to exit the menu. Disable DISPLAY STORAGE and READOUT, and enable ZERO SPAN.

s. Press SWEEP ↓ six times.

t. Adjust VERT POS (R6) at the rear panel to position the top of the square-wave to the top edge of the screen.

u. Adjust TRACE ROT (R7) at the rear panel for a level trace.

v. Adjust R705 (GEO) on the Power Supply board and VERT POS (R6) at the rear panel for the straightest trace possible at the top edge of the screen.

w. Adjust R910 (VERT GAIN) on the Power Supply board to place the bottom of the trace at the bottom graticule line.

x. Disable the DEFLECTION AMP CAL signal by pressing UTIL 5 2 1 and enable SWEEP CAL by pressing 3. Press any menu button to exit the menu.

y. Adjust HORIZ POS (R5) on the rear panel to position the CRT beam to the center vertical graticule line.

z. Move the beam at the right edge of the graticule by pressing SWEEP ↑ three times.

aa. Adjust R900 (HOR GAIN) on the Power Supply board to place the beam at the right edge of the graticule.

1. Adjust Power Supply and Deflection

Instrument with serial number B030000 and later. Adjust R639, R669, R680, R703, R704, R705, R900, and R930 on the Power Supply board and R6, R7, and R110 on the rear panel.

- Test equipment required:

  Voltage Variable Isolation Transformer
  Test Oscilloscope with Probes
  Multimeter (DMM)
  High Voltage Probe (X1000)

WARNING. *Use an* ***isolation transformer*** *when working on the Power Supply. The transformer must have a three wire input and output connector with ground through the input and output. Stancor GIS21000 is an example of a suitable transformer.*

Hazardous line potential exists on the Power Supply board at all times the instrument power cord is connected. If it becomes necessary to remove the shield on the bottom of the Power Supply board, use extreme caution when handling the instrument.

Refer to Figure 4–1 for the location of most adjustments and test points.

1. Connect an Isolation Transformer in line with the Spectrum Analyzer power input and the AC line voltage source of 90 to 250 VAC.
2. Set R669 (DTC) on the Power Supply board to midrange position.
3. Apply power to the Spectrum Analyzer and turn on the graticule lights (DSPL 6).
4. Adjust R937 (+5 V ADJ) on the Power Supply board for +5.0 VDC at the +5 V test point.
5. Set the test oscilloscope controls as follows:

Channel 1	
Coupling	AC
Deflection Factor	20 mV/div
Trigger	Channel 1, positive edge
Time Base	5 µs/div

6. Place the Channel 2 probe near R680 on the Power Supply board. The test oscilloscope should display approximately four periods of the waveform at TP250.
7. Adjust R680 (LOCK) so that the waveform on TP270 is locked to the waveform on TP250. An unlocked waveform exhibits a noticeable amount of jitter. When the waveform locks, a sudden shift of the waveform occurs and the jitter goes away. Continue adjusting R680 counterclockwise until lock is lost or the potentiometer is fully counterclockwise. Make a note of the range through which the signal stays locked. Center R680 in the noted range.

***NOTE**. The waveform at TP270 has phase jitter due to pulse width modulation.*

8. Vary the line voltage from 90 VAC to 240 VAC while checking for no loss of lock. Readjust R680 if lock is lost. Reset the line voltage to nominal.

9. Check the power supplies as per Table 1–4.

Table 1–4: Power Supply Tolerances

Power Supply	Voltage Range
–11 V	–10.2 V to –11 V
+5 V	Adjusted with R937
+10 V	+10.0 V to +10.8 V
+20 V	+21 V to +24 V
+50 V	+47 V to +51 V
+115 V	+109 V to +117 V

10. Turn off the graticule lights (DSPL 6).

11. Enable the checkerboard pattern by pressing **UTIL 5 2 2** and set INTENSITY fully clockwise.

12. Set R703 (Z AXIS) on the Power Supply board to midrange position.

13. Monitor TP120 with the Multimeter and the –2.75KV test point with the High Voltage Probe.

14. Adjust R669 (DTC) on the Power Supply board for –2835 V at the –2.75 KV test point. A tolerance of +40 V and –30 V applies to the –2835 V when R669 reaches either endstop.

15. Adjust R639 (HV) on the Power Supply board for –2750 V ±5 V. The DC level at TP120 should lie between 50 V and 250 V.

***NOTE**. The signal at TP120 is a 20 V triangle waveform with a DC component. The DC component should lie between 50 V and 250 V after R639 is adjusted.*

16. Press **UTIL** five times to return the display to the spectral display mode. Set INTENSITY fully counterclockwise.

17. Adjust R703 (Z AXIS) on the Power Supply board until the display just disappears (no beam current).

***NOTE**. Steps 18 through 21 only apply to instruments with serial numbers B04XXXX or above. For instruments with serial numbers B03XXXX or below, skip to step 22.*

---

18. With a multimeter measuring the DC voltage at pin 1 of J1, adjust R705 (GEO) for a voltage measurement of **45 Vdc ±1 V.**

19. Adjust R110 (FOCUS) on the Power Supply board for best overall focus.

20. Adjust R704 (ASTIG) on the Power Supply board to improve the overall focus.

21. Readjust R110 on the Power Supply board for the sharpest overall display.

***NOTE**. Steps 22 through 24 only apply to instruments with serial numbers B03XXXX or below. For instruments with serial numbers B04XXXX or above, skip to step 25.*

---

22. Set R110 (FOCUS) on the Power Supply board fully clockwise.

23. Adjust R704 (ASTIG) on the Power Supply board for as round a dot as possible.

24. Adjust R110 on the Power Supply board for the sharpest display.

25. Enable the DEFLECTION AMP CAL signal by pressing **UTIL 5 2 1**. Press any menu button to exit the menu.

26. Disable DISPLAY STORAGE and READOUT, and enable ZERO SPAN.

27. Press **SWEEP** ↓ six times.

28. Adjust VERT POS (R6) at the rear panel to position the top of the square wave to the top edge of the screen.

29. Adjust TRACE ROT (R7) at the rear panel for a level trace.

30. Adjust R705 (GEO) on the Power Supply board and VERT POS (R6) at the rear panel for the straightest trace possible at the top edge of the screen.

31. Adjust R910 (VERT GAIN) on the Power Supply board to place the bottom of the trace at the bottom graticule line.

32. Disable the DEFLECTION AMP CAL signal by pressing **UTIL 5 2 1** and enable SWEEP CAL by pressing **3**. Press any menu button to exit the menu.

33. Adjust HORIZ POS (R5) on the rear panel to position the CRT beam to the center vertical graticule line.

34. Move the beam at the right edge of the graticule by pressing **SWEEP** ↑ three times.

35. Adjust R900 (HOR GAIN) on the Power Supply board to place the beam at the right edge of the graticule.

2. Adjust Sweep and Horizontal Deflection Amplifier

(R290 and R280 on the Sweep board)
(HORIZ POS (R5) on the rear panel)
(R901 on the Power Supply board)

Test Equipment Required:

- Voltmeter

a. Recall default power-up settings by pressing UTIL 1 1.

b. Disable the DISPLAY STORAGE, and center the beam by pressing UTIL 5 2 3. Press any menu button to exit the menu.

c. Monitor TP2 with the voltmeter. See Figure 4-1 for the location of TP2.

d. Adjust R290 on the Sweep board (Figure 4-1) for 0.0 V, ±2 mV at TP2.

e. Adjust HORIZ POS (R5) on the rear panel to position the CRT beam to the center vertical graticule line.

f. Move the beam at the right edge of the graticule by pressing SWEEP ↑ three times.

g. Adjust R280 on the Sweep board (Figure 4-1) for –1.170 to –1.180 V at TP2.

h. Adjust R901 on the Power Supply board (Figure 4-1) to place the beam at the right edge of the graticule.

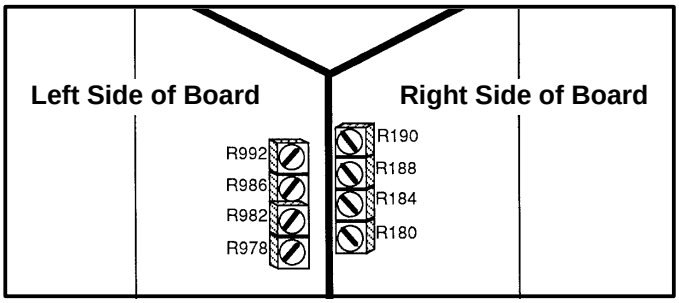

Figure 4-2. Display Storage board adjustment locations.

i. Disable the Sweep Cal signal by pressing UTIL 5 2 3. Exit the menu by pressing any menu button. Press SWEEP AUTO to enable the sweep.

3. Adjust Display Storage

(R190, R188, R992, and R986 on the Display Storage board)

See Figure 4-2 for the location of adjustments on the Display Storage board.

a. Recall factory default power-up settings by pressing UTIL 1 1.

b. Enable the checkerboard pattern by pressing UTIL 5 2 2.

c. Adjust R190 on the Display Storage board to position the center of the checkerboard pattern at center screen.

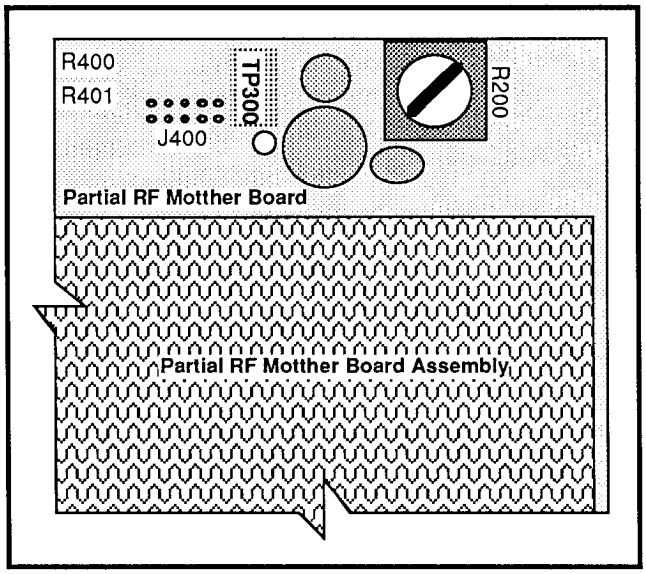

Figure 4-3. Location of TP300 on the RF Mother board.

d. Adjust R188 on the Display Storage board for optimum one checkerboard square per division (edges of intensified squares positioned to left and right vertical graticule lines).

e. Adjust R992 and R986 on the Display Storage board for proper spacing of the pattern at the top and bottom of the screen, respectively. Press any menu button five times to return to the spectral display.

f. Initialize instrument settings by pressing UTIL 0.

4. Preset Locked 2nd LO

(C201 and R535 on the 2nd LO board)

a. Select the following settings on the spectrum analyzer:

FREQUENCY	100 MHz
REFERENCE LEVEL	–30 dBm
SPAN/DIV	5 MHz
RES BW	5 MHz
VIDEO FILTER	On
VERT SCALE	10 dB/DIV

b. Enable the Calibrator signal by pressing INPUT 9.

c. Monitor TP300 on the RF Mother board with the voltmeter. See Figure 4-3 for the location of TP300 on the RF Mother board.

d. Adjust C201 (Figure 4-4) until the oscillator locks. (The calibrator signal comes on screen.) Note the voltage reading on the meter. Adjust C201 for a tune voltage of 8.5 to 9.5 V.

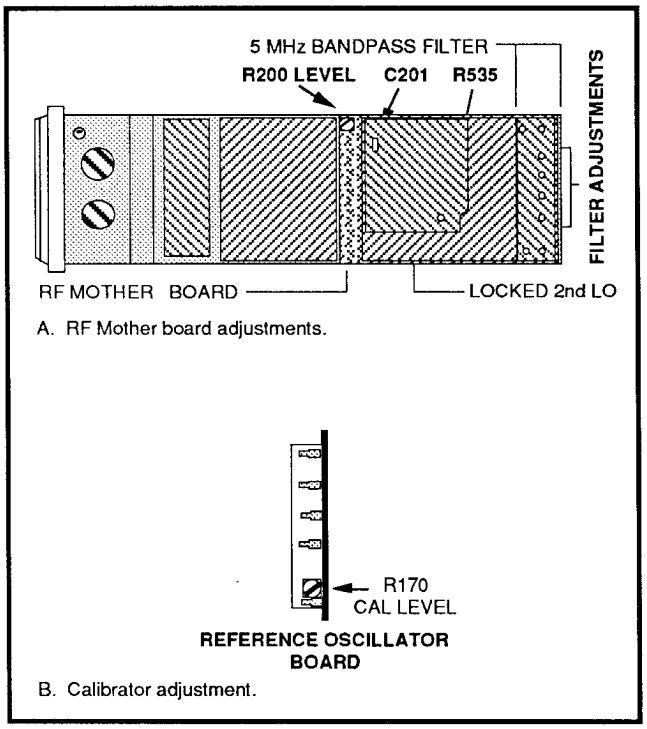

Figure 4-4. Locked 2nd LO and 5 MHz Bandpass Filter adjustments.

5. Adjust the Phase Lock CFC Assembly

(R931, R918, R920, R746, R827, R620, and C611 on the Phase Lock CFC assembly; R184, R190, and R180 on the Display Storage board)

- Time Mark Generator

Refer to Figure 4-5 for adjustment and test point locations excluding TP168 on the Sweep board.

a. Initialize instrument settings by pressing UTIL 0.

b. Disable frequency corrections by pressing UTIL 4 3 5. Press any menu button to exit the menu.

c. Recall default frequency normalization values by pressing UTIL 5 5 0 8 Y. Press any menu button to exit the menu. Set FREQUENCY at 0 Hz.

d. Adjust R931 (Main Coil Offset) on the Phase Lock CFC board to center the 0 Hz signal. Use the SPAN/DIV ↓ to reduce the span/div to 1 MHz while keeping the signal centered with R931.

e. Press MAX SPAN twice and check that the 0 Hz signal is within 2 minor divisions of center screen. If necessary, readjust R931 on the Phase Lock CFC board to center the 0 Hz signal.

f. Repeat part e until the 0 Hz signal remains within 2 minor divisions of center screen.

g. Select the following settings on the spectrum analyzer:

FREQUENCY	500 MHz
REF LEVEL	–30 dBm
SPAN/DIV	100 MHz
RES BW	300 kHz
VID FLTR	OFF
VERT SCALE	10 dB/div

h. Enable the calibrator signal by pressing INPUT 9.

i. Disable DISPLAY STORAGE (analog display mode on) and the READOUT.

j. Set the FREQ/MKRS knob such that a mark (harmonic of the calibrator signal) is at center screen.

k. Adjust R918 (Main SWP Gain) on the Phase Lock CFC board for one mark per division.

l. Enable DISPLAY STORAGE D.

m. Adjust R184 on the Display Storage board such that the frequency dot is positioned at the peak of the mark nearest to center screen.

n. Adjust R190 on the Display Storage board to place the frequency dot at center screen.

o. Adjust R180 on the Display Storage board to align the stored display to the non-stored display across the entire screen.

p. Disable the calibrator signal by pressing INPUT 9.

q. Apply 0.2 µs time marks to the RF INPUT.

r. Reset FREQUENCY to 25 MHz and SPAN/DIV to 5 MHz. Use the FREQ/MKRS knob to position a mark at center screen.

s. Adjust R920 (FM SWP Gain) on the Phase Lock CFC board for one mark per division.

t. Adjust the Low Frequency VCO and High Frequency VCO as follows:

(1) Enable the LFVCO adjustment procedure by pressing UTIL 5 2 4 0; then follow screen prompts up to the adjustment of R746.

(2) After adjusting R746, press the BKSP once to return to CFCV1 ADJUSTMENTS menu; then press 1 for the HFVCO adjustment and follow screen prompts.

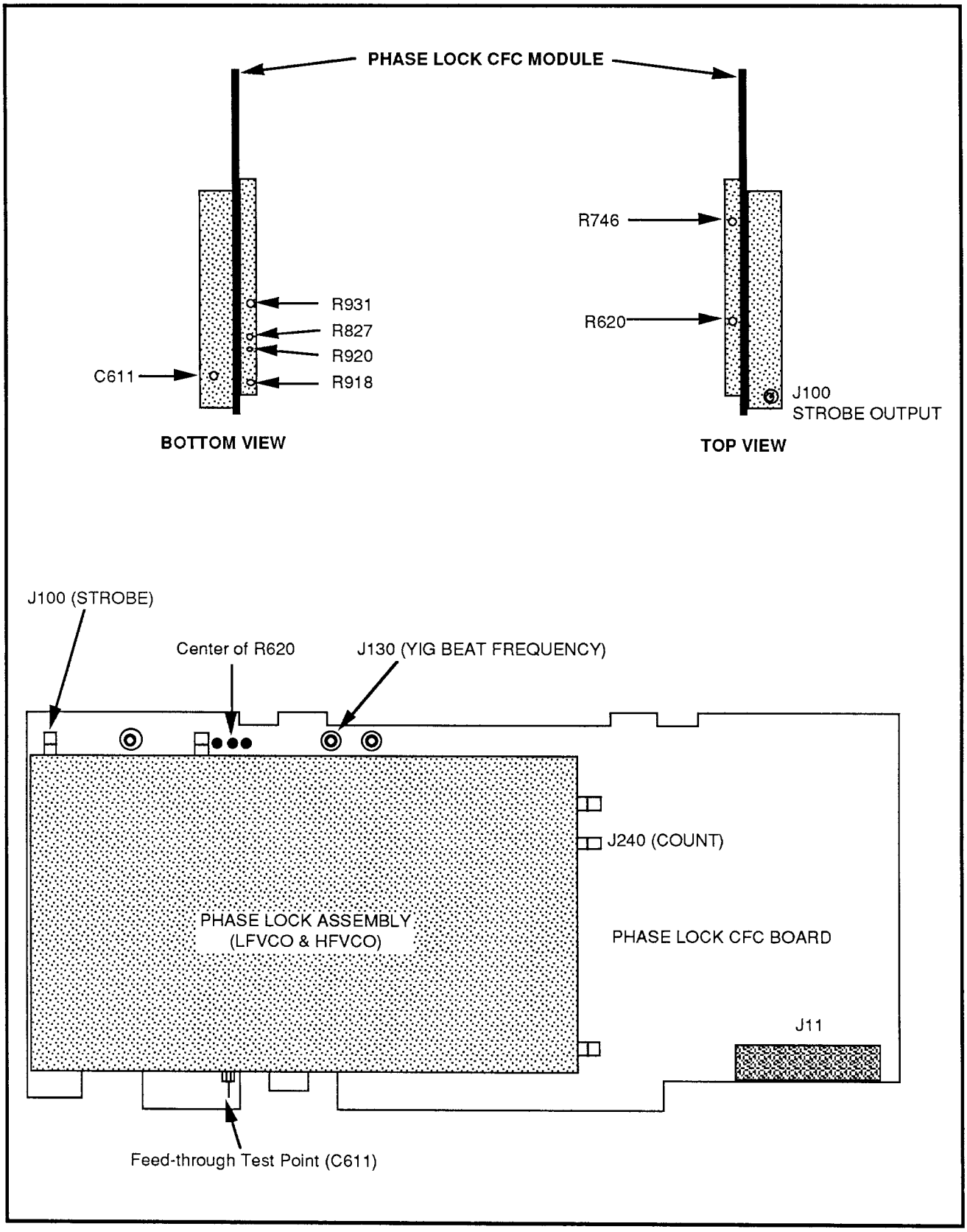

Figure 4-5. Phase Lock CFC Module adjustment and test point locations.

NOTE

Capacitor C611 is adjusted for 8.5 V at the second peak as C611 is adjusted from fully clockwise.

(3) After adjusting C611, press BKSP to return to CFCV1 ADJUSTMENTS menu; then press 3 for the FM DAC sensitivity adjustment and follow screen prompts.

u. Adjust the Counter Level as follows:

(1) Recall factory default power-up settings by pressing UTIL1 1.

(2) Disable frequency corrections by pressing UTIL 4 3 5. Press any menu button to exit the menu.

(3) Enable continuous strobes by pressing UTIL 5 1 6 6. Press any menu button to exit the menu.

(4) Set SPAN/DIV to MAX SPAN and press SWEEP ↓ twice.

(5) Use a X10 probe to connect the Channel 1 input (X channel input for an X–Y display) of the test oscilloscope to TP2 on the Sweep board. Ground the test oscilloscope at the spectrum analyzer chassis.

(6) Use a X1 probe to connect the Y channel of the test oscilloscope to the center of R620 (CNT LVL) on the Phase Lock CFC assembly.

(7) Set the X input deflection factor at 0.2 V/div and the Y input deflection factor at 10 mV, AC-coupled. Set the test oscilloscope Time/Div control to XY.

(8) Adjust R620 (CNT LVL) on the Phase Lock CFC assembly for an envelope-waveform amplitude of 80 mVp–p. Check that the ratio of the peak-to-peak to valley-to-valley amplitude is less than 2:1.

(9) Recall factory default power-up settings by pressing UTIL1 1.

(10) Remove the probes from the instrument.

(11) Perform frequency normalizations by pressing UTL 3 1 W.

(12) When normalizations are complete, select the following settings on the spectrum analyzer:

FREQUENCY	100 MHz
REF LEVEL	–20 dBm
SPAN/DIV	100 kHz

(13) Connect a 100,000,000.0 Hz signal to the RF INPUT. Set the controls for a full screen display.

(14) Initiate reference frequency normalizations by pressing UTIL 5 5 1 1 2 W.

(15) After normalizations are completed, press any menu button to return to the spectral display.

6. Adjust 5 MHz Resolution Bandwidth

(110 MHz Bandpass Filter on the RF Mother board)

a. Recall factory default power-up settings by pressing UTIL1 1.

b. Select the following settings on the spectrum analyzer:

FREQUENCY	100 MHz
REFERENCE LEVEL	–30 dBm
SPAN/DIV	2 MHz
RES BW	30 kHz
VERT SCALE	10 dB/div

c. Connect a 100 MHz/–30 dBm to the RF INPUT. Center the display by pressing CTR-MEAS TRKG.

d. Enable bandwidth mode by pressing APPL 9 0, entering –6 dB, and pressing BKSP and 0.

e. Change the resolution bandwidth to 5 MHz. (The bandwidth readout will continuously update as the adjustments are made.)

f. Starting with the capacitor towards the top of the instrument, adjust the four capacitors for highest amplitude, best filter shape of the 5 MHz pass band (4 to 6 MHz), and centering. See Figure 4-4 for the locations of the four capacitors on the RF Mother board. If necessary, adjust the C280 and C392 (Figure 4-6) on the Log board for amplitude and filter shape.

g. Decrease the reference level by one step and check that the filter shape is not severely distorted.

7. Adjust Log Board

Equipment Required:

- Signal Generator (Marconi 2022)
- 10 dB and 1 dB Step Attenuators
- Voltmeter
- RF Cable, BNC-to-SMB

Refer to Figure 4-6 for all adjustment locations on the Log board.

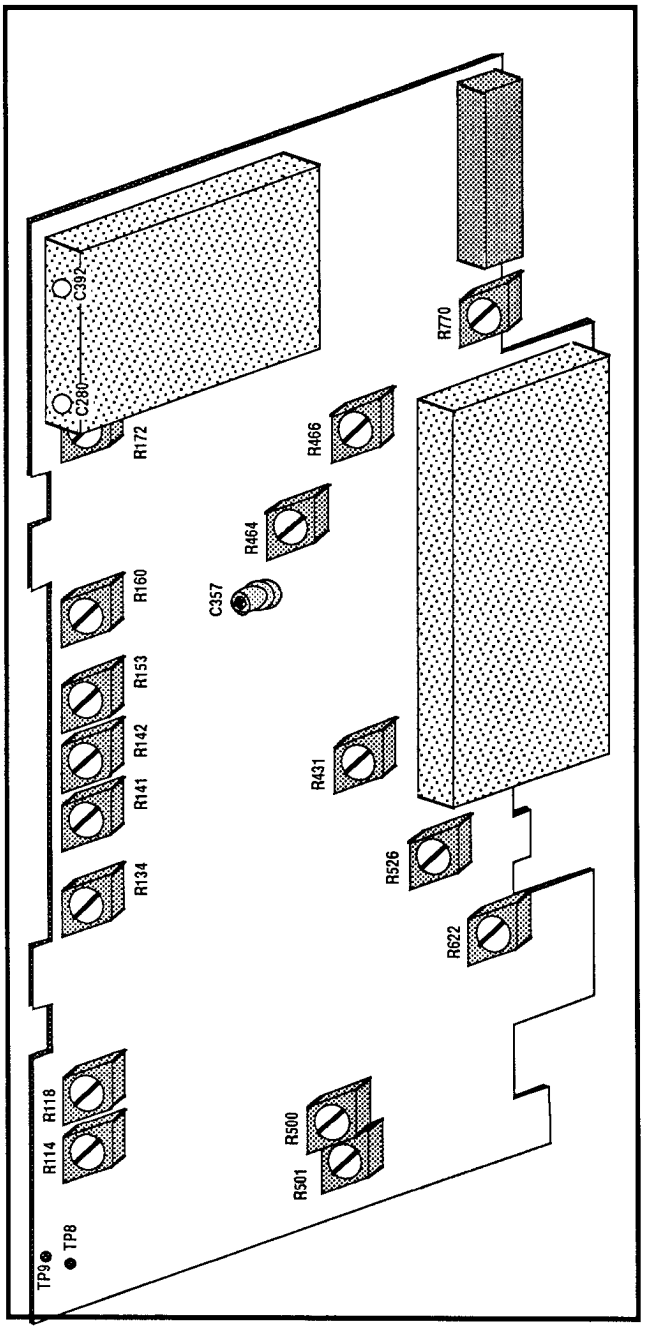

Figure 4–6. Log board adjustment and test point locations.

a. Adjust 10 dB/div, 5 dB/div, and 1 dB/div Log Match
(R622 on the Log board)

(1) Recall factory default power-up settings by pressing UTIL1 1. Recall default amplitude normalizations by pressing UTIL 5 5 2 9 Y. Press any menu button to exit the menu.

(2) Set R160 and R172 on the Log board fully counter-clockwise.

(3) Disconnect P190 from the Log board, and use the BNC-to-SMB cable to connect a 10 MHz/–10 dBm signal to J190 through the 10 dB and 1 dB Step Attenuators. Set the attenuators for 0 dB attenuation.

(4) Select the following settings on the spectrum analyzer:

FREQUENCY	100 MHz
SPAN/DIV	ZERO SPAN
RES BW	3 kHz
VERT SCALE	1 dB/div

(5) Disable DISPLAY STORAGE, and press SWEEP↓ twice.

(6) Adjust R622 (LOG GAIN) on the Log board for trace shift as the VERT SCALE is cycled through 10 dB/div, 5 dB/div, and 1 dB/div. If necessary, set VERT POS (R6) to bring the trace into the viewing area.

(7) Set the VERTICAL SCALE to 10 dB/div.

(8) Adjust VERT POS (R6) on the rear panel to position the trace at the top graticule line.

b. Adjust Level
(R992, R986, R982, and R978 on the Display Storage board)

(1) Enable the checkerboard pattern (Display Storage adjustment pattern) by pressing UTIL 5 2 2.

(2) Adjust R992 on the Display Storage board (Figure 4-2) to align the top of the checkerboard pattern with the top graticule line.

(3) Adjust R986 on the Display Storage board (Figure 4-2) to align the bottom of the checkerboard pattern with bottom graticule line.

(4) Press any menu button five times to exit the checkerboard pattern.

(5) Adjust R982 on the Display Storage board (Figure 4-2) to match the position of the stored display to the non-stored display at the top graticule line. (Pressing D repeatedly alternates the display between a non-stored and a stored trace.)

(6) Press LIN and add proper external attenuation to the input signal to place the non-stored trace at the bottom graticule line.

(7) Adjust R978 on the Display Storage board (Figure 4-2) to match the position of the stored display to the non-stored display at the bottom graticule line.

(8) Enable DISPLAY STORAGE D.

(9) Reset the VERTICAL SCALE to 10 dB/div and insert 30 dB of attenuation in the input signal path using the external attenuators.

(10) Adjust R501 on the Log board to position the trace at the third graticule line from the top of the screen.

(11) Insert an additional 40 dB of attenuation in the input signal path.

(12) Adjust R770 on the Log board to position the trace at the seventh graticule line from the top of the screen.

(13) Repeat parts (9) through (12) to compensate for interaction between the adjustments of R501 and R770.

c. Check Logging

(1) Remove all attenuation from the input signal path. (Set the external attenuators for 0 dB.)

(2) Insert a total of 80 dB of attenuation in the input signal path in 10 dB steps.

(3) Check that the signal level falls within a 1/2 minor division of a major graticule line over the first seven divisions as each 10 dB of attenuation is added, and within two minor divisions of the bottom graticule line for the 70 dB to 80 dB step.

(4) Reset the external attenuators to 0 dB.

(5) Reset the VERTICAL SCALE to 5 dB/div.

(6) Insert a total of 40 dB of attenuation in the input signal path in 10 dB steps.

(7) Check that the signal level falls within one minor division of the –40 dB, –50 dB, –60 dB, and –70 dB graticule positions as each 10 dB of attenuation is added. The cumulative error over the 40 dB range should not exceed two minor divisions (2 dB).

(8) Reset the external attenuators to 0 dB.

(9) Reset the VERT SCALE to 1 dB/div.

(10) Insert a total of 8 dB of attenuation in the input signal path.

(11) Check that the signal level falls within one major division of the bottom graticule line.

d. Adjust Linear (LIN) Mode
(R431, R500, and R526 on the Log board)

(1) Disconnect the 10 MHz signal from J190 on the Log board.

(2) Reset the VERT SCALE to LIN.

(3) Monitor TP9 on the Log board with the voltmeter.

(4) Adjust R431 on the Log board for a DC level of 20 mV ±2 mV at TP9.

(5) Adjust R500 on the Log board to position the trace at the bottom graticule line.

(6) Reconnect the 10 MHz/–10 dBm signal to J190 on the Log board through the 10 dB and 1 dB Step Attenuators. Set the attenuators for 0 dB attenuation (no external attenuation).

(7) Adjust R526 on the Log board to position the trace at the top graticule line.

(8) Repeat parts (3) through (7) until both "top of screen" and "bottom of screen" alignment are satisfied.

(9) Add 6 dB of attenuation to the input signal.

(10) Check that the trace is within 2 minor divisions of the fourth graticule line from top-screen.

(11) Add another 6 dB of attenuation to the input signal.

(12) Check that the trace is within 2 minor divisions of the sixth graticule line from top-screen.

(13) Add another 6 dB of attenuation to the input signal.

(14) Check that the trace is within 2 minor divisions of the seventh graticule line from top-screen.

e. Adjust Quasi-Peak LOG Path *(2712 Option 12 only)*
(R118, R114, and R134 on the Log board)

(1) Disconnect the 10 MHz signal from J190 on the Log board.

(2) Reset the VERT SCALE to 10 dB/div.

(3) Monitor TP8 on the Log board with the voltmeter.

(4) Adjust R118 on the Log board for 0 V ±5 mV at TP8.

(5) Enable EMC MODE by pressing APPL 5. Press any menu button to exit the menu.

(6) Reconnect the 10 MHz/–10 dBm signal to J190 on the Log board through the 10 dB and 1 dB Step Attenuators. Set the attenuators for 40 dB attenuation.

(7) Set the amplitude of the input signal to place the trace at the top graticule line.

(8) Reset the VERT SCALE to 5 dB/div and enable QP MODE by pressing APPL 6.

(9) Adjust R114 on the Log board to position the trace at the top graticule line.

(10) Enable an additional 20 dB of external attenuation (60 dB total external attenuation).

(11) Adjust R134 on the Log board to position the trace at the 4th graticule line from the top of the screen.

(12) Enable an additional 15 dB of external attenuation (75 dB total external attenuation).

(13) Adjust R118 on the Log board to position the trace at the 7th graticule line from the top of the screen.

(14) Remove 15 dB of external attenuation and repeat parts (11) through (14) until both "fourth graticule line" and "seventh graticule line" alignment are satisfied.

f. Adjust Quasi-Peak LIN Path (*2712 Option12 only*)
(R142 and R141 on the Log board)

(1) Reset the external attenuators for 40 dB of attenuation.

(2) Enable LIN mode by pressing LIN.

(3) Adjust R142 on the Log board to position the trace at the top graticule line.

(4) Disconnect the 10 MHz signal from J190 on the Log board.

(5) Adjust R141 on the Log board to position the trace at the bottom graticule line.

(6) Disconnect the 10 MHz signal from J190 on the Log board and reconnect P190.

g. Adjust RF Gain
(R200 on the RF Mother board)
(R170 on the Reference Oscillator board)

(1) Recall factory default power-up settings by pressing UTIL1 1.

(2) Select the following settings on the spectrum analyzer:

FREQUENCY	100 MHz
SPAN/DIV	2 MHz
REFERENCE LEVEL	–30 dBm
RESOLUTION BW	5 MHz
VIDEO FILTER	On
VERT SCALE	1 dB/div

(3) Use the Power Meter to set the amplitude of a 100 MHz signal from the Signal Generator and cable combination at –30 dBm, then connect the 100 MHz signal to the RF INPUT.

(4) Adjust R200 on the RF Mother board to position the signal peak at the top graticule line.

(5) Turn off the input signal (Carrier Off), and enable the internal Calibrator by pressing INPUT 9.

(6) Adjust R170 on the Reference Oscillator board to position the Calibrator signal peak at the top graticule line.

h. Adjust the FM Detector
(C357 and R153 on the Log board)

(1) Disable the internal Calibrator by pressing INPUT 9.

(2) Apply a 100 MHz/–30 dBm signal with 80 kHz FM deviation at a 1 kHz rate to the RF INPUT.

(3) Reset the VERT SCALE to 10 dB/div and center the display by pressing CTR-MEAS/TRKG. Enable ZERO SPAN; select the internal trigger by pressing SWP/TRIG 1; enable FM Deviation Mode by pressing APPL 7; then set the sweep speed to 200 µs by pressing SWEEP ↓ repeatedly until 200 µs is displayed.

(4) Set the inner LEVEL control for a triggered display.

(5) Set R153 on the Log board to set the signal peak approximately one division from the bottom of the screen.

(6) Adjust C357 on the Log board for maximum signal size.

(7) Adjust R153 on the Log board to place the bottom of the signal at the bottom graticule line.

(8) Reduce the amount of deviation in 10 kHz increments until the bottom peaks of the signal are at one division below top of screen.

(9) Check that the peaks fall within 2 minor divisions of each graticule line.

(10) Press CTR-MEAS/TRKG.

(11) Check that the right hand readout indicates approximately C1.000KHZ.

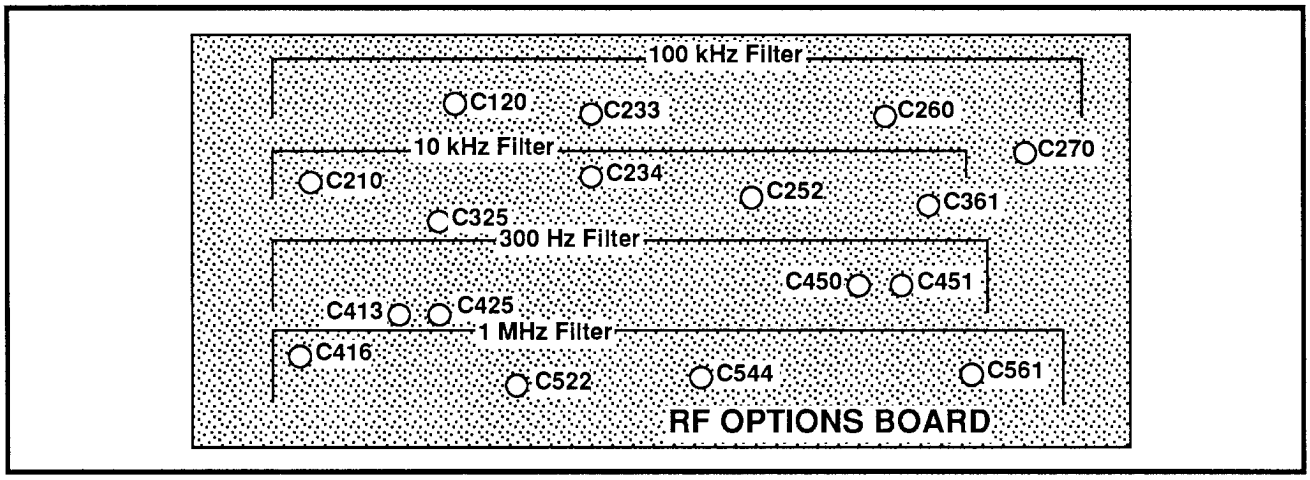

Figure 4-7. Option 14 and 300 Hz Filter adjustment locations.
(2712 only)

8. Adjust Variable Resolution Filters

Equipment Required:

- 100 MHz Signal Generator

a. Adjust 1 MHz Resolution Bandwidth
(2712 Option 14 only)
(C561, C544, C522, and C416 on the RF Options board)

(1) Recall factory default power-up settings by pressing UTIL 1 1.

(2) Connect a 100 MHz/–30 dBm signal to the RF INPUT.

(3) Recall default amplitude normalizations by pressing UTIL 5 5 2 9 Y. Press any menu button to exit the menu.

(4) Select the following settings on the spectrum analyzer:

FREQUENCY	100 MHz
REFERENCE LEVEL	–20 dBm
SPAN/DIV	1 MHz
RESOLUTION BW	30 kHz
VIDEO FILTER	Off
VERTICAL SCALE	10dB/Div

(5) Save the display in one of the DISPLAY STORAGE registers.

(6) Change the resolution bandwidth to 1 MHz.

(7) Adjust C561, C544, C522, and C416 on the RF Options board (Figure 4-7) for highest amplitude, best filter shape, and centering about the stored 30 kHz filter.

(8) Set the reference level for a full-screen display, and enable the VID FLTR.

(9) Enable bandwidth mode by pressing APPL 9 0 and entering –6 dB, then pressing BKSP and 0.

(10) Check bandwidth shape factor. The bandwidth at the 60 dB down point must not exceed 7X the bandwidth at the 6 dB down point.

(11) Check that the filter amplitude is –20 dBm, ±4 dB.

(12) Disconnect the signal from the RF INPUT.

b. Adjust 300 kHz Resolution Bandwidth Filter
(C611, C612, C620, and C621 on the VR Filter board)

(1) Recall factory default power-up settings by pressing UTIL 1 1.

(2) Connect a 100 MHz/–30 dBm signal to the RF INPUT.

(3) Recall default amplitude normalizations by pressing UTIL 5 5 2 9 Y. Press any menu button to exit the menu.

(4) Select the following settings on the spectrum analyzer:

FREQUENCY	100 MHz
REF LEVEL	–20 dBm
SPAN/DIV	200 kHz
RES BW	30 kHz
VID FLTR	Off
VERT SCALE	10dB/Div

(5) Save the display in one of the DISPLAY STORAGE registers.

(6) Reset the RES BW to 300 kHz.

(7) Adjust C611, C612, C620, and C621 on the VR Filter Select board (Figure 4-8) for highest amplitude, best filter shape, and centering.

(8) Set the reference level for a full-screen display, and enable the VID FLTR.

(9) Enable bandwidth mode by pressing APPL 9 0 and entering –6 dB, then pressing BKSP and 0.

(10) Check bandwidth shape factor. The bandwidth at the 60 dB down point must not exceed 7X the bandwidth at the 6 dB down point.

(11) Check that the filter amplitude is –20 dBm, ±4 dB.

(12) Disconnect the signal from the RF INPUT.

c. Adjust 100 kHz Resolution Bandwidth (2712 Option 14 Only)
(C270, C260, C233, and C120 on the RF Options board)

(1) Recall factory default power-up settings by pressing UTIL 1 1.

(2) Connect a 100 MHz/–30 dBm signal to the RF INPUT.

(3) Recall default amplitude normalizations by pressing UTIL 5 5 2 9 Y. Press any menu button to exit the menu.

(4) Select the following settings on the spectrum analyzer:

FREQUENCY	100 MHz
REFERENCE LEVEL	–20 dBm
SPAN/DIV	100 kHz
RESOLUTION BW	30 kHz
VIDEO FILTER	Off
VERTICAL SCALE	10dB/Div

(5) Save the display in one of the DISPLAY STORAGE registers.

(6) Adjust C270, C260, C233, and C120 on the RF Options board (Figure 4-7) for highest amplitude, best filter shape, and centering about the stored 30 kHz filter.

(7) Set the reference level for a full-screen display, and enable the VID FLTR.

(8) Enable bandwidth mode by pressing APPL 9 0 and entering –6 dB, then pressing BKSP and 0.

(9) Check bandwidth shape factor. The bandwidth at the 60 dB down point must not exceed 7X the bandwidth at the 6 dB down point.

(10) Check that the filter amplitude is –20 dBm, ±4 dB.

(11) Disconnect the signal from the RF INPUT.

d. Adjust 30 kHz Resolution Bandwidth Filter
(C314 and C430 on the VR board)

(1) Recall factory default power-up settings by pressing UTIL 1 1.

(2) Connect a 100 MHz/–30 dBm signal to the RF INPUT.

(3) Recall default amplitude normalizations by pressing UTIL 5 5 2 9 Y. Press any menu button to exit the menu.

(4) Select the following settings on the spectrum analyzer:

FREQUENCY	100 MHz
REF LEVEL	–20 dBm
SPAN/DIV	10 kHz
RES BW	30 kHz
VID FLTR	Off
VERT SCALE	10 dB/Div

(5) Adjust C314 and C430 on the VR board (Figure 4-8) for highest amplitude and best filter shape.

(6) Set the reference level for a full screen display, and enable the VID FLTR.

(7) Enable bandwidth mode by pressing APPL 9 0 and entering –6 dB, then pressing BKSP and 0.

(8) Check bandwidth shape factor. The bandwidth at the 60 dB down point must not exceed 7X the bandwidth at the 6 dB down point.

(9) Check that the filter amplitude is –20 dBm, ±4 dB.

(10) Disconnect the signal from the RF INPUT.

e. Adjust 3 kHz Resolution Bandwidth Filter
(C211, C220, and C230 on the VR Filter board)

(1) Recall factory default power-up settings by pressing UTIL 1 1.

(2) Connect a 100 MHz/–30 dBm signal to the RF INPUT.

(3) Recall default amplitude normalizations by pressing UTIL 5 5 2 9 Y. Press any menu button to exit the menu.

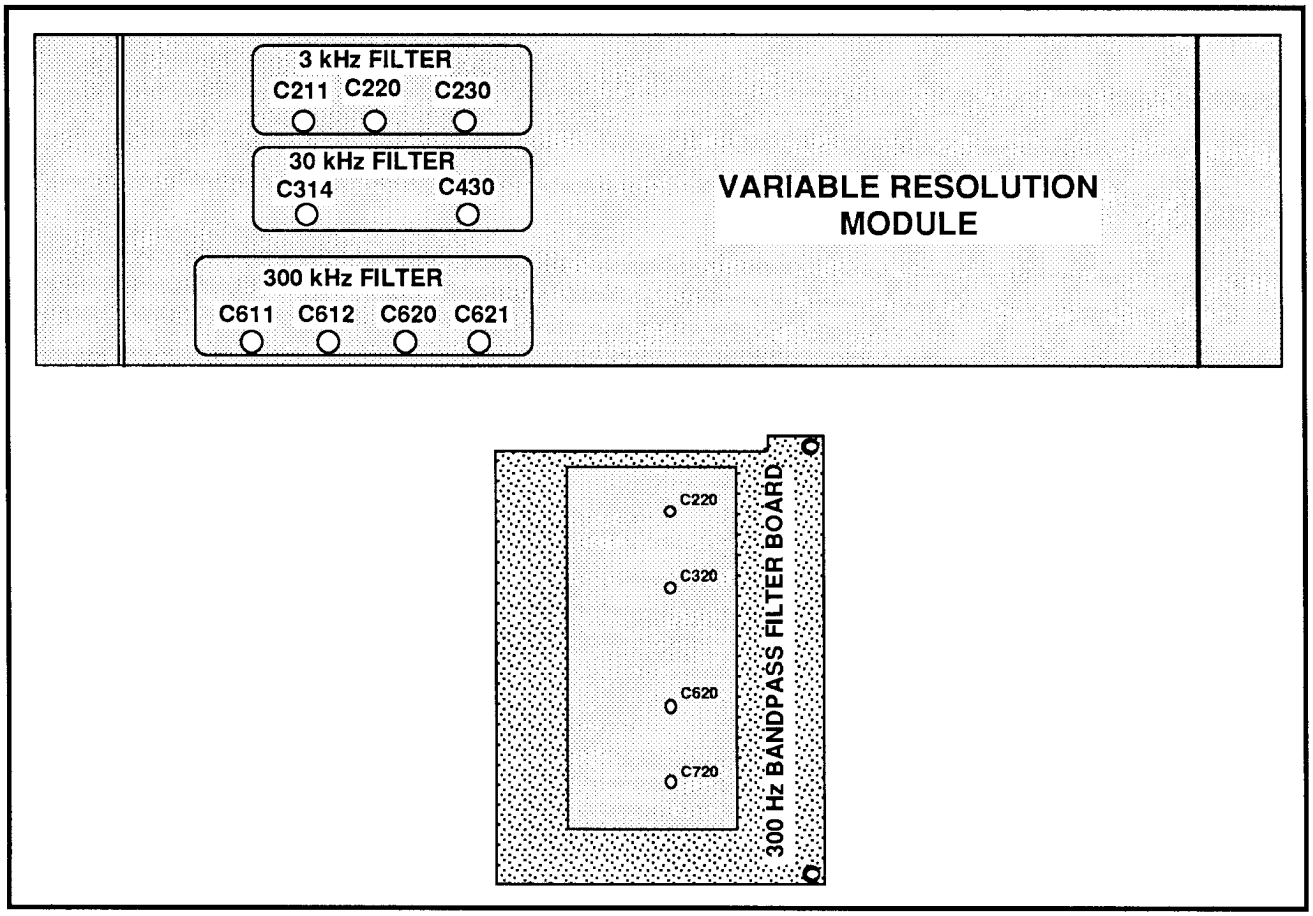

Figure 4-8. Variable Resolution module and 300 Hz Bandpass Filter board adjustment locations.

(4) Select the following settings on the spectrum analyzer:

FREQUENCY	100 MHz
REF LEVEL	–30 dBm
SPAN/DIV	10 kHz (2711 only)
SPAN/DIV	2 kHz (2712 only)
RES BW	3 kHz
VID FILTER	Off
VERT SCALE	10 dB/Div

(5) Adjust C211, C220, and C230 on the VR Filter board (Figure 4-8) for highest amplitude and best filter shape.

(6) Set the reference level for a full-screen display, and enable the VID FLTR.

(7) Enable bandwidth mode by pressing APPL 9 0 and entering –6 dB, then pressing BKSP and 0.

(8) Check bandwidth shape factor. The bandwidth at the 60 dB down point must not exceed 7X the bandwidth at the 6 dB down point.

(9) Check that the filter amplitude is –20 dBm, ±4 dB.

(10) Disconnect the signal from the RF INPUT.

f. Adjust 10 kHz Resolution Bandwidth (2712 Option 14 only)
(C361, C325, C252, C234, and C210 on the RF Options board)

(1) Recall factory default power-up settings by pressing UTIL 1 1.

(2) Connect a 100 MHz/–30 dBm signal to the RF INPUT.

(3) Recall default amplitude normalizations by pressing UTIL 5 5 2 9 Y. Press any menu button to exit the menu.

(4) Select the following settings on the spectrum analyzer:

FREQUENCY	100 MHz
REFERENCE LEVEL	–20 dBm
SPAN/DIV	10 kHz
RESOLUTION BW	10 kHz
VIDEO FILTER	Off
VERTICAL SCALE	10dB/Div

(5) Adjust C361, C325, C252, C234, and C210 on the RF Options board (Figure 4-7) for highest amplitude and best filter shape.

(6) Set the reference level for a full screen display, and enable the VID FLTR.

(7) Enable bandwidth mode by pressing APPL 9 0 and entering –6 dB, then pressing BKSP and 0.

(8) Check bandwidth shape factor. The bandwidth at the 60 dB down point must not exceed 7X the bandwidth at the 6 dB down point.

(9) Check that the filter amplitude is –20 dBm, ±4 dB.

(10) Disconnect the signal from the RF INPUT.

g. Adjust 300 Hz Resolution Bandwidth Filter *(2712 only)*
(C720, C620, C320, and C220 on the 300 Hz Bandpass Filter board)

(1) Recall factory default power-up settings by pressing UTIL 1 1.

NOTE

In the standard 2712 instrument, the 300 Hz filter resides on the 300 Hz Filter board in the card cage.

In 2712 Option 12 instruments, the 200 Hz filter replaces the 300 Hz filter and resides on the RF Options board.

In 2712 Option 14 instruments, the 300 Hz filter resides on the RF Options board.

This procedure applies to the standard 2712 instrument only. The adjustment procedure for the 300 Hz filter in Option 14 instruments is located towards the end of this procedure in the Options Adjustments.

(2) Turn the power off. Disconnect P132 from the 300 Hz Bandpass Filter board and lift the board out of the instrument. Remount the 300 Hz Bandpass Filter board. Connect a 10.00000 MHz, –15 dBm signal to J132.

(3) Turn power on and select the following settings on the spectrum analyzer:

FREQUENCY	100 MHz
REF LEVEL	–30 dBm
SPAN/DIV	1 kHz
RES BW	AUTO
VID FLTR	Off
VERT SCALE	10 dB/Div

(4) Press SWEEP ↓ twice. The display should be a straight line.

(5) Adjust C720, C620, C320, and C220 on the 300 Hz Bandpass Filter board (Figure 4-7) for maximum amplitude.

(6) Reset the VERT SCALE to 1 dB/div, and readjust the capacitors for maximum amplitude.

(7) Disconnect the signal generator from J132. Turn the power off and reinstall the 300 Hz Bandpass Filter board in the instrument. Reconnect the coaxial cable to J132.

h. Adjust 300 Hz Resolution Bandwidth Filter in an Option 14 Instrument *(2712 only)*
(C413, C425, C450, and C451 on the RF Options board)

(1) Recall factory default power-up settings by pressing UTIL 1 1.

(2) Disconnect W47 from J180 on the RF Options assembly (at the front connector on the RF Options assembly) and connect a 10.00000 MHz, –15 dBm signal to J180.

FREQUENCY	100 MHz
REF LEVEL	–30 dBm
SPAN/DIV	1 kHz
RES BW	AUTO
VID FLTR	Off
VERT SCALE	10 dB/Div

(3) Press SWEEP ↑ twice. The display should be a straight line.

(4) Adjust C413, C425, C450, and C451 on the RF Options board (Figure 4-7) for maximum amplitude.

(5) Reset the VERT SCALE to 1 dB/div, and readjust the capacitors for maximum amplitude.

(6) Disconnect the signal generator from J180 and reconnect P180.

9. Adjust Locked 2nd LO

(C201 and R535 on the 2nd LO board)

Test equipment required:

- Voltmeter

a. Recall factory default power-up settings by pressing UTIL 1 1.

b. Select the following settings on the spectrum analyzer:

FREQUENCY	100 MHz
REF LEVEL	–30 dBm
SPAN/DIV	10 kHz *(2711 only)*
SPAN/DIV	5 kHz *(2712 only)*
RES BW	3 kHz *(2711 only)*
RES BW	300 Hz *(2712 only)*

b. Enable the Calibrator signal by pressing INPUT 9.

c. Monitor TP300 (Figure 4-3) on the RF Mother board with the voltmeter.

d. Adjust C201 (Figure 4-4) until the oscillator locks. (The calibrator signal comes on screen.) Adjust C201 so that the noise floor is ≤1 division 25 kHz on either side of the signal. There should be no detectable amplitude changes in the noise floor after C201 is adjusted, and the noise floor should slope downwards from the signal.

e. Check that DC level at TP300 lies within 7 V and 11 V. Typical value is 8.5 V.

NOTE

Adjusting C201 for the lowest possible voltage in the given range without losing VCO lock results in maximum phase noise reduction.

10. Perform Gain Step Reference and Reference Amplitude Normalizations

a. Start Gain Step Reference Normalizations by pressing UTIL 5 5 1 0.

b. Follow the screen prompts. Perform steps 1 and 2. When the screen prompt says THE SIGNAL LEVEL MUST BE BETWEEN +10 AND –10 DBM, set the signal level at –10 dBm.

c. When complete, press BKSP and 2 and follow the screen prompts.

11. Adjust Flatness

(R160 and R172 on the Log board)

Test equipment required:

- Sweep Generator
- N male to N male coaxial cable

a. Recall factory default power-up settings by pressing UTIL 1 1.

b. Connect the Sweep Generator output to the RF INPUT.

c. Select the following settings on the spectrum analyzer:

FREQUENCY	100 MHz
REF LEVEL	–20 dBm

d. Press SWEEP ↑ three times. Check that R160 and R172 on the Log board are set fully counter-clockwise.

e. Preset R160 and R172 on the Log board as shown in Figure 4-9.

f. Set the Sweep Generator Time to 0.1, variable fully clockwise, and power level to 4. If the generator signal is too low or high, use the power level potentiometer on the Sweep Generator to bring the signal level to mid-screen.

g. Allow the spectrum analyzer to sweep one full sweep.

h. Press MKR ← to place a marker on the peak to the left of 100 MHz.

i. Press DSPL 8 3 to enable a display line through the marker.

j. Enable automatic sweep speed by pressing SWEEP AUTO.

k. Adjust R160 (Slope) and R172 (Slope Offset) on the Log board for flatness (±1.5 dB) while keeping the marked peak (peak that has a marker on it) at the display line. See Figure 4-6 for adjustment locations.

l. Press SWEEP ↑ three times.

m. Check that the marked peak is still at the display line. If necessary, repeat the adjustments until flatness is within specification with the marked peak at the display line.

n. Disconnect the Sweep Generator from the RF INPUT.

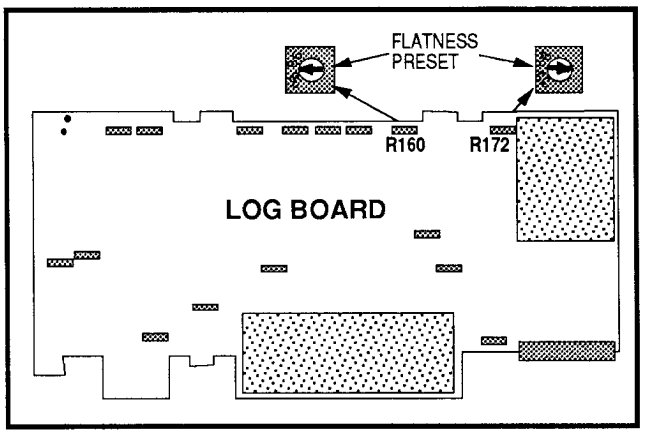

Figure 4-9. Presetting the flatness adjustments on the Log board.

12. Perform Service Normalizations

a. Gain Step Reference

Test equipment required:

- Signal Generator
- Power Meter
- 10 dB and 1 dB Step Attenuator Assembly
- Two 6 dB Attenuators

(1) Connect the test equipment as shown in Figure 4-10.

(2) Set the step attenuators to 0 dB, and set the generator for a 100 MHz output and a power meter reading of –0 dBm.

(3) Set the step attenuators to 10 dB (add 10 dB of attenuation to the 100 MHz signal) and make a note of the power meter reading. This is the actual attenuation of the 10 dB step.

(4) Reset the step attenuator to 0 dB. Disconnect the cable from the power meter sensor and connect it to the RF INPUT.

(5) Perform frequency normalizations (if not previously done) by pressing UTIL 3 1.

(6) Start the first gain step measurement by pressing UTIL 5 5 1 0 1 W. The instrument will make a measurement and return to GAIN STEP REF menu.

(7) Start the second measurement by pressing 2 and 1, and entering the actual value of the 10 dB step attenuator determined in part (3).

(8). Finish the gain step normalization by adding 10 dB of attenuation in the signal path and pressing 2 and W.

(9) Press BKSP to return to the REFERENCE NORMALIZATIONS menu.

b. Internal Reference Frequency

(1) Connect a 100,000,000.0 Hz signal to the RF INPUT. Set the controls for a full screen display.

(2) Center the signal by pressing CTR-MEAS/TRKG.

(3) Initiate reference frequency normalization by pressing UTIL 5 5 1 1, and follow screen prompts.

c. Internal Reference Amplitude

(1) Initiate reference amplitude normalization by pressing UTIL 5 5 1 2 and following screen prompts.

d. Perform Amplitude Normalizations

(1) Press UTIL 3 2 to invoke amplitude normalizations.

13. Set Reference Frequency Correction Bits

(SW410 on the Reference Oscillator board)

Equipment Required:

- 100 MHz Frequency Standard

a. Perform reference frequency normalizations. See Step 12b.

b. When normalizations are complete, display reference normalization values by pressing BKSP, 4, and 6. Make a note of the CALIBRATOR FREQ value. Press any menu button to return to the spectral display.

c. Start the Reference Frequency correction bit entry routine by pressing UTIL 5 2 4 2. Where the screen prompt calls for a new value, enter the value noted in part b, and follow the screen prompts. See Table 4-2 for the correction bit values for SW410. See Figure 4-11 for the location of SW410 on the Reference Oscillator board.

d. Turn power off and back on. Recall last power down settings by pressing UTIL 1 0. Display reference normalization values by pressing UTIL 5 5 4 6.

e. Check that the CALIBRATOR FREQ value is 100 MHz, ±1.2 kHz.

f. Perform reference frequency normalizations. See Step 12b.

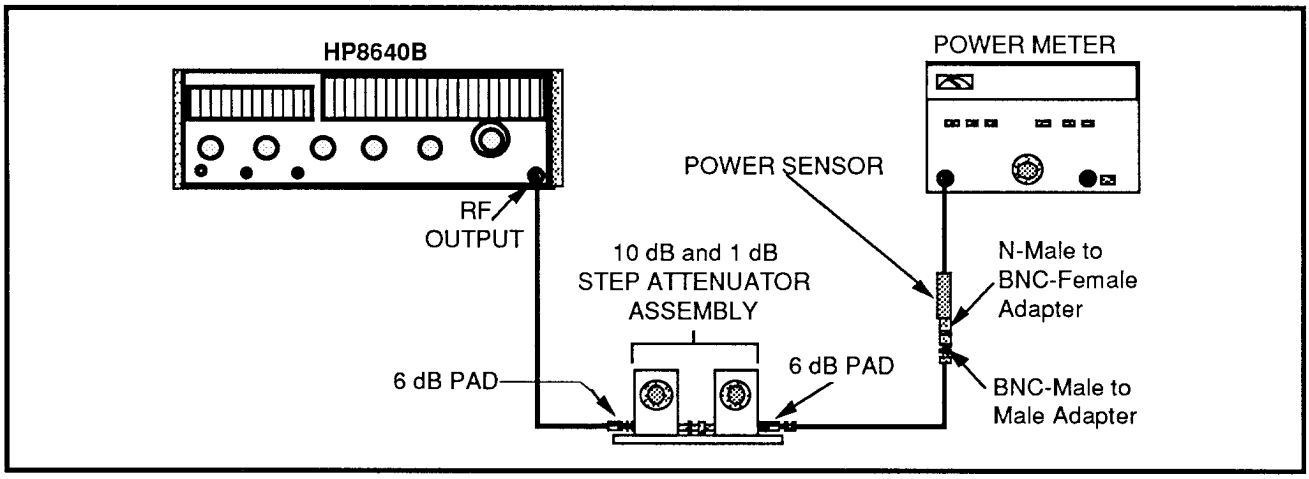

Figure 4-10. Gain Step Reference test setup.

Table 4-2
CORRECTION BIT VALUES

Switch No.	Value
8	10 Hz
7	20 Hz
6	40 Hz
5	80 Hz
4	160 Hz
3	320 Hz
2	640 Hz
1	1280 Hz

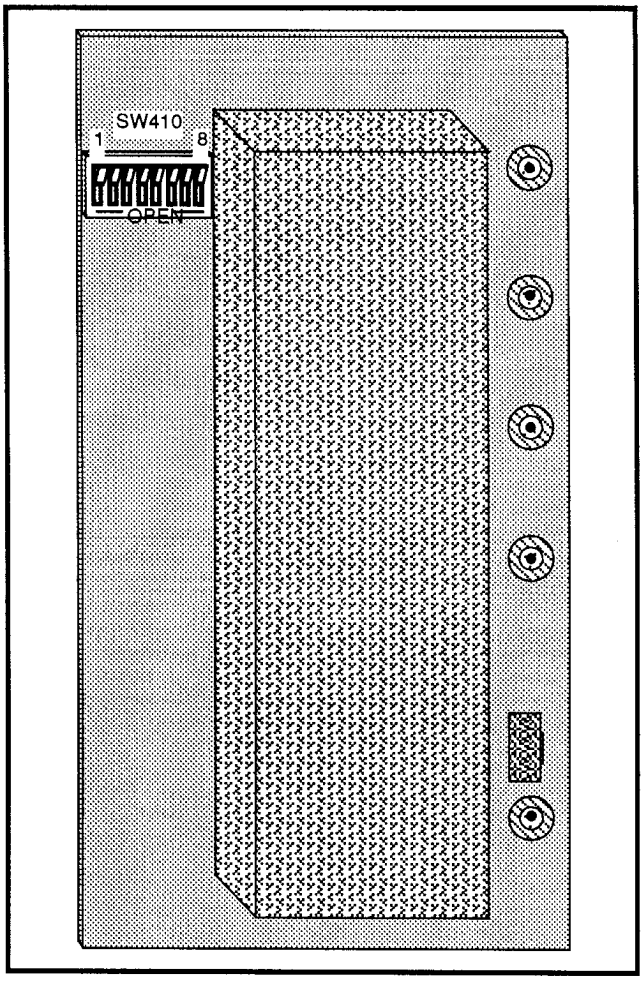

Figure 4-11. SW410 on the Reference Oscillator board.

OPTIONS ADJUSTMENTS

1. Adjust the Tracking Generator (Option 04)

Test Equipment Required:

- Power Meter
- Test Oscilloscope
- Test Spectrum Analyzer
- Special Test Probe (Figure 4-16)

Turn the power off.

Remove the cabinet. Refer to the removal procedure preceding adjustment step 1.

Remove the tracking generator module from the spectrum analyzer as follows:

Disconnect the 50 Ω terminator from J110, the tracking generator output cable from J600, and the 1st LO Cable from 1st LO Buffer to J100 (see Figure 4-12).

NOTE

In some instruments the 50 Ω terminator is replaced by a semirigid cable if Option 15 is installed. In those instruments, simply disconnect the third cable from J110. The 50 Ω terminator is at the rear panel of the spectrum analyzer.

Remove four phillips head screws from the corners of the left side cover. See Figure 4-12.

Carefully pull the tracking generator module out without disconnecting the power cable and flexible cable (to Microprocessor). Place the tracking generator module on the bench.

Remove the shield cover over the Isolation Amplifier board (10 T10 Torx screws).

Use a male-to-female SMA cable to connect the LO signal from the 1st LO Buffer to J100 (Figure 4-12).

Apply power to the spectrum analyzer.

Allow a 30 minute warm up period before continuing this procedure.

Perform spectrum analyzer service normalizations (excluding tracking generator normalizations). Refer to Step 11 in this section for service normalization procedures.

After the normalization routines are completed, press UTIL 3 and verify that all spectrum analyzer normalizations have passed (excluding tracking generator normalizations).

Press any menu button to exit the menu.

a. Isolation Amplifier Gain and Flatness

(1) Check Option 15 Output
(≥+5 dBm)

(a) Monitor the 1st LO output (J110) on the Isolation Amplifier board with the power meter. See Figure 4-12 for the location of the 1st LO output.

(b) Select the following settings on the spectrum analyzer/tracking generator system:

SPAN/DIV	MAX SPAN
RES BW	AUTO
TG FIXED LEVEL	0 dBm
TG VARIABLE LEVEL	OFF
TG TRACKING	OFF
TRACKING GENERATOR	ON

(c) On the spectrum analyzer/tracking generator system, enable MANUAL SCAN by pressing SWP/TRIG 7.

(d) Manually sweep the spectrum analyzer/tracking generator system slowly from 100 kHz to 1.8 GHz while observing the power meter.

(e) Make a note of the power meter reading of the lowest and highest points on the display.

(f) Check that the power meter indicates at least +5 dBm for the lowest point on the display and no more than +10 dBm for the highest point. Use the following method to account for any losses in the extension cable to the 1st LO input:

i. Connect the power meter directly to the 1st LO output of the spectrum analyzer.

ii. Enable manual scan by pressing SWP/TRIG 7, and enable MAX SPAN.

iii. Move the manual scan while watching the test oscilloscope for the lowest swing in voltage (lowest power). Note the screen position on the spectrum analyzer.

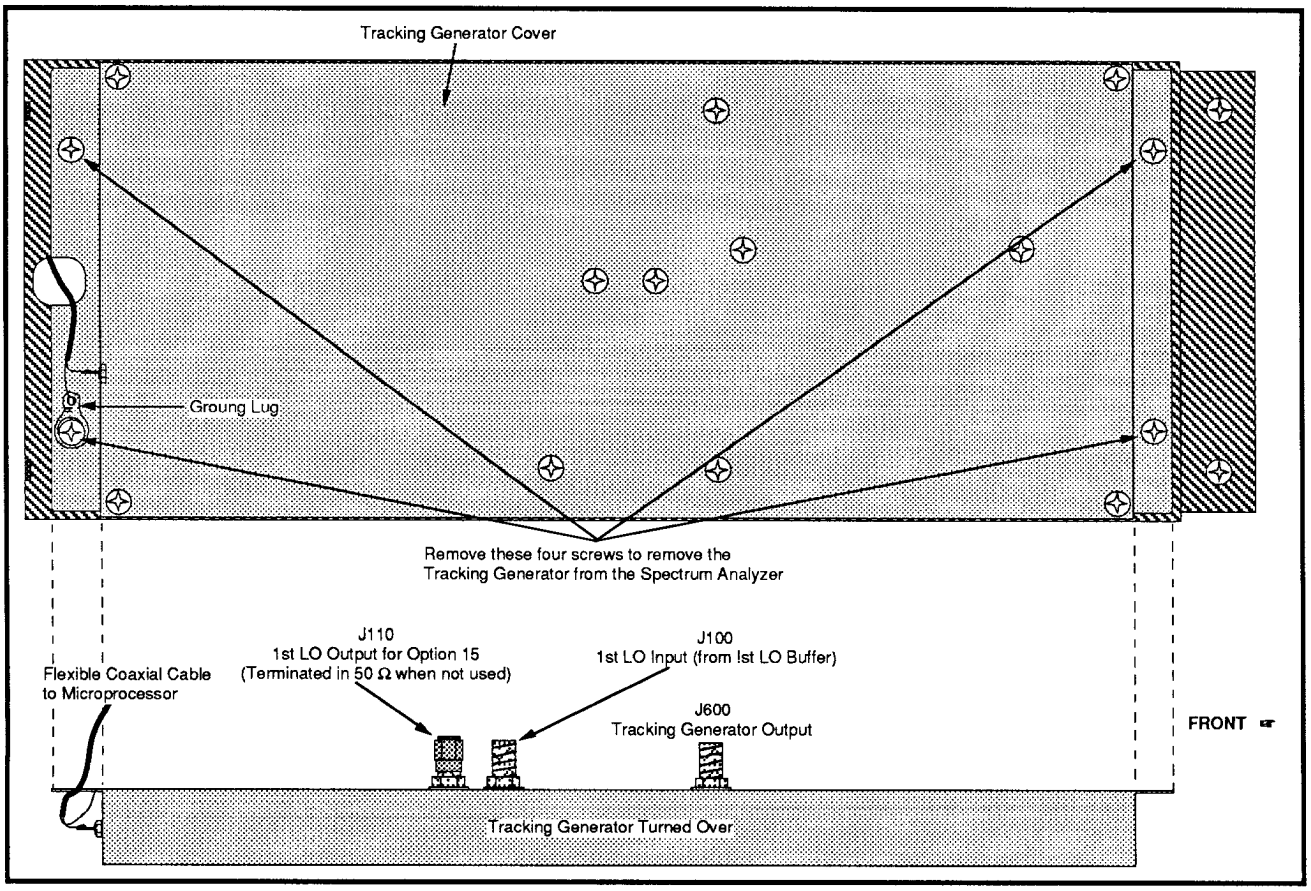

Figure 4-12. Removing the Tracking Generator from the Spectrum Analyzer.

vi. Verify on the power meter that this is the lowest LO power output.

v. Write down the power meter reading at lowest power noted.

vi. Remove the power meter from the LO output.

vii. Put the low loss cable between the LO output and the power meter.

viii. Subtract the power meter reading from the one noted in part v. This is the cable loss (should be fractions of a dB).

(g) Replace the 50 Ω terminator to J110 on the Isolation Amplifier board or move the 50 Ω terminator from J101 on the rear panel to J110 on the tracking generator if Option 15 is installed (Figure 4-12).

(h) Recall default power-up settings by pressing UTIL 1 1.

(2) Adjust Isolation Amplifier Output Level
(R421 on the Isolation Amplifier board)

(a) Connect the test equipment as shown in Figure 4-13.

(b) Select the following settings on the spectrum analyzer/tracking generator system:

FREQ SPAN/DIV	ZERO SPAN
RES	AUTO
TG FIXED LEVEL	0 dBm
TG VARIABLE LEVEL	OFF
TG TRACKING	OFF
TRACKING GENERATOR	ON

(c) On the test oscilloscope, set the Y-channel to .1 V/Div, DC-coupled with 0 VDC at center-screen. Set the X-channel Variable Volts/Div control for full-screen horizontal deflection.

(d) Adjust R421 (Output Level) on the Isolation Amplifier board for –50 mV DC as viewed on the test oscilloscope. See Figure 4-14 for the location of R421.

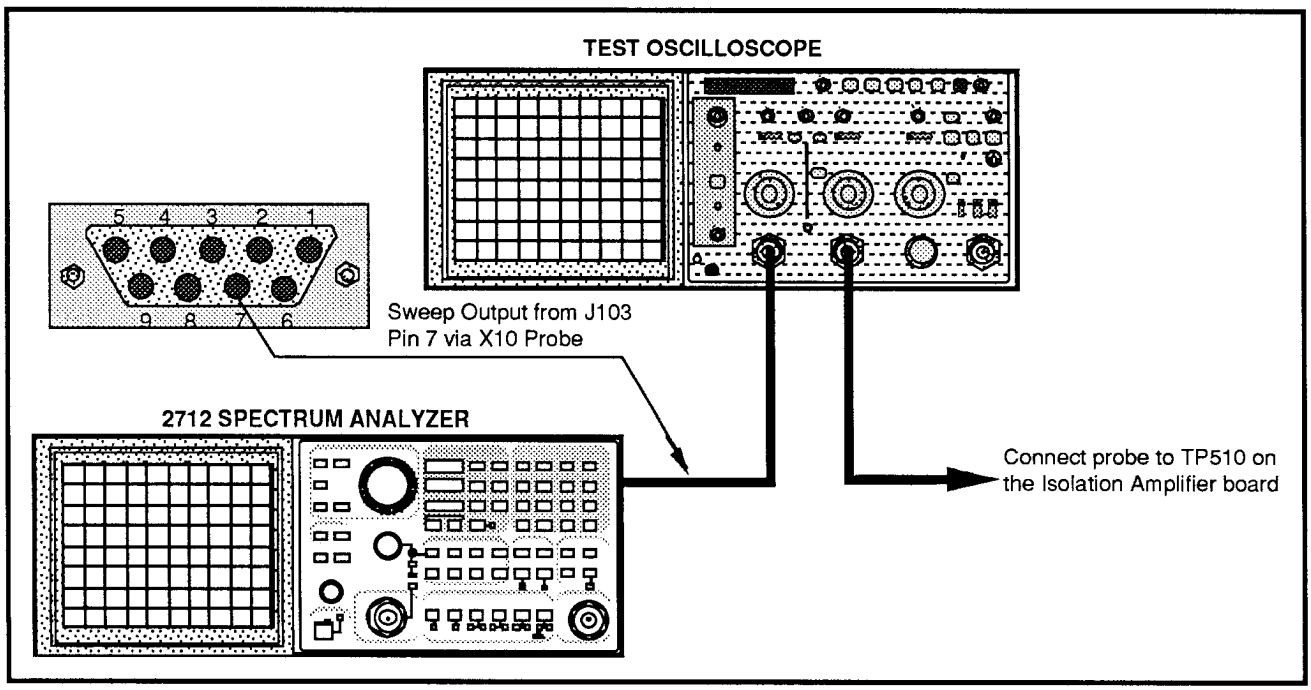

Figure 4-13. Test equipment setup for adjusting the Isolation Amplifier output level.

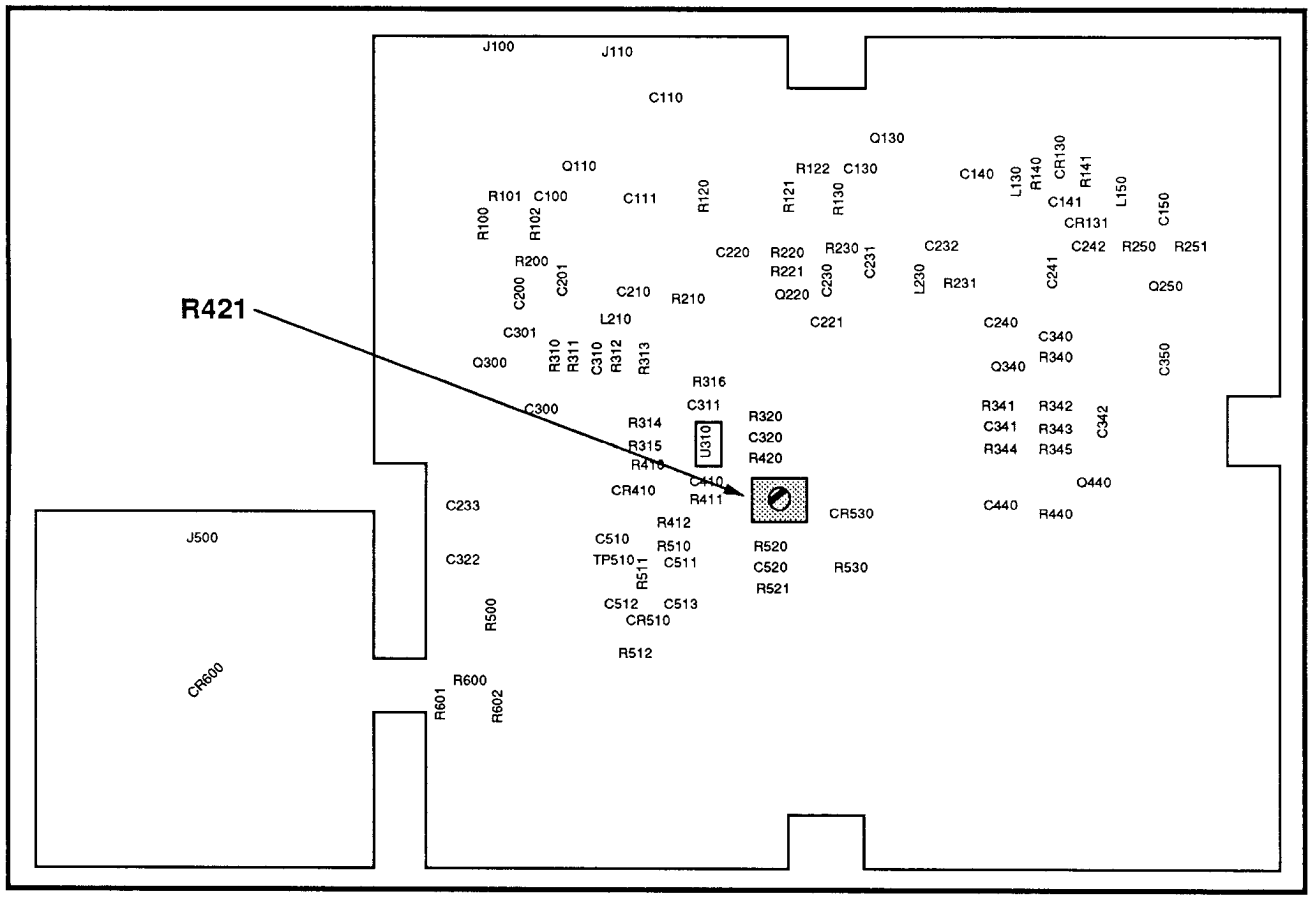

Figure 4-14. Adjustment location on the Isolation Amplifier board.

(e) Recall default power-up settings by pressing UTIL 1 1.

b. Adjust 105.5 MHz Oscillator Balance
(C420 on the Phase Lock Loop board)

(1) Enable SPECTRAL DISPLAY IN MENUS mode by pressing UTIL 4 3 6. Press any menu button to exit the menu.

(2) Enable the 105.5 MHz oscillator by pressing UTIL 5 7 4, and set the frequency DAC value at 1600 by pressing 1 and entering 1600 (terminate with W).

(3) Monitor the collector of Q420 on the Phase Lock Loop board with the test oscilloscope. Set the test oscilloscope vertical for 50 mV/div and AC-coupled, and set the sweep rate at 0.1 µs/div.

(4) Adjust C420 for peak amplitude on the test oscilloscope. See Figure 4-15 for the location of C420.

(5) Press 9 (frequency count enable) and check that the counted frequency is ≈105 MHz. If it is not, readjust C420 to the next signal peak and check again. Repeat this step until the count is ≈105 MHz.

(6) Set the frequency DAC value at 0 by pressing 1 and entering 0 (terminate with W).

(7) Press 9 (frequency count enable) and check that the counted frequency is ≥105.501 MHz.

(8) Turn the FREQ/MKRS knob counter-clockwise one click (frequency DAC value =4095).

(9) Press 9 (frequency count enable) and check that the counted frequency is ≤105.496 MHz.

NOTE

If steps g and i do not yield the desired results, readjust C420 slightly.

(10) Recall default power-up settings by pressing UTIL 1 1.

c. Adjust Phase Lock
(C121 and R335 on the Phase Lock Loop board)

(1) Enable SPECTRAL DISPLAY IN MENUS mode by pressing UTIL 4 3 6.

(2) Enable the 105.5 MHz oscillator by pressing UTIL 5 7 4. (This enables the tracking generator.)

(3) Monitor TP240 on the Phase Lock Loop board with test oscilloscope. See Figure 4-15 for the location of TP240.

(4) Adjust C121 (Figure 4-15) on the Phase Lock Loop board for 7 VDC at TP 240. (C121 may be a wire loop, chip capacitor, or metal tab.)

(5) Turn the power off and back on, and check for +7 VDC at TP240.

(6) Select the following settings on the test spectrum analyzer:

Center Frequency	2110 MHz
Reference Level	–30 dBm
Span/Div	50 MHz
Resolution BW	Auto
Vertical Scale	10 dB/Div

(7) Monitor the signal across R141 on the Phase Lock Loop board with the test spectrum analyzer using the Special Test Probe of Figure 4-16 (Special Test Probe across R141). Locate a 2110 MHz signal across R141.

(8) Reduce the Span/Div setting to 200 kHz while keeping the 2110 MHz signal centered with the FREQ/MKRS knob.

(9) Set R335 on the Phase Lock Loop board fully clockwise. See Figure 4-15 for the location of R335.

(10) Use the test spectrum analyzer reference level control to set the 2110 MHz signal 10 dB above top screen.

(11) Make a note of the phase noise amplitude 300 kHz (1.5 divisions) away from the 2110 MHz signal.

(12) Adjust R335 on the Phase Lock Loop board to raise this phase noise by 3 dB.

(13) Recall default power-up settings by pressing UTIL 1 1.

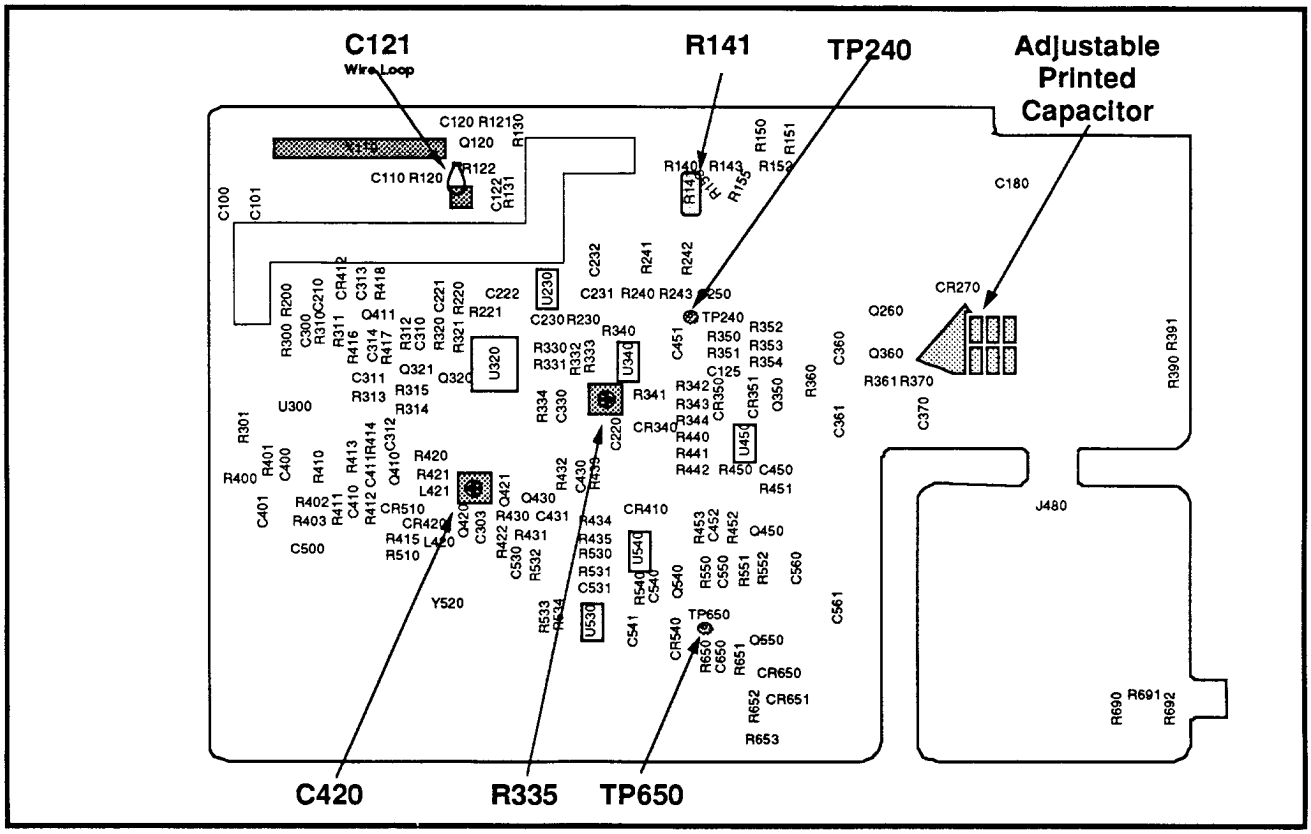

Figure 4-15. Adjustment locations on the Phase Lock Loop board.

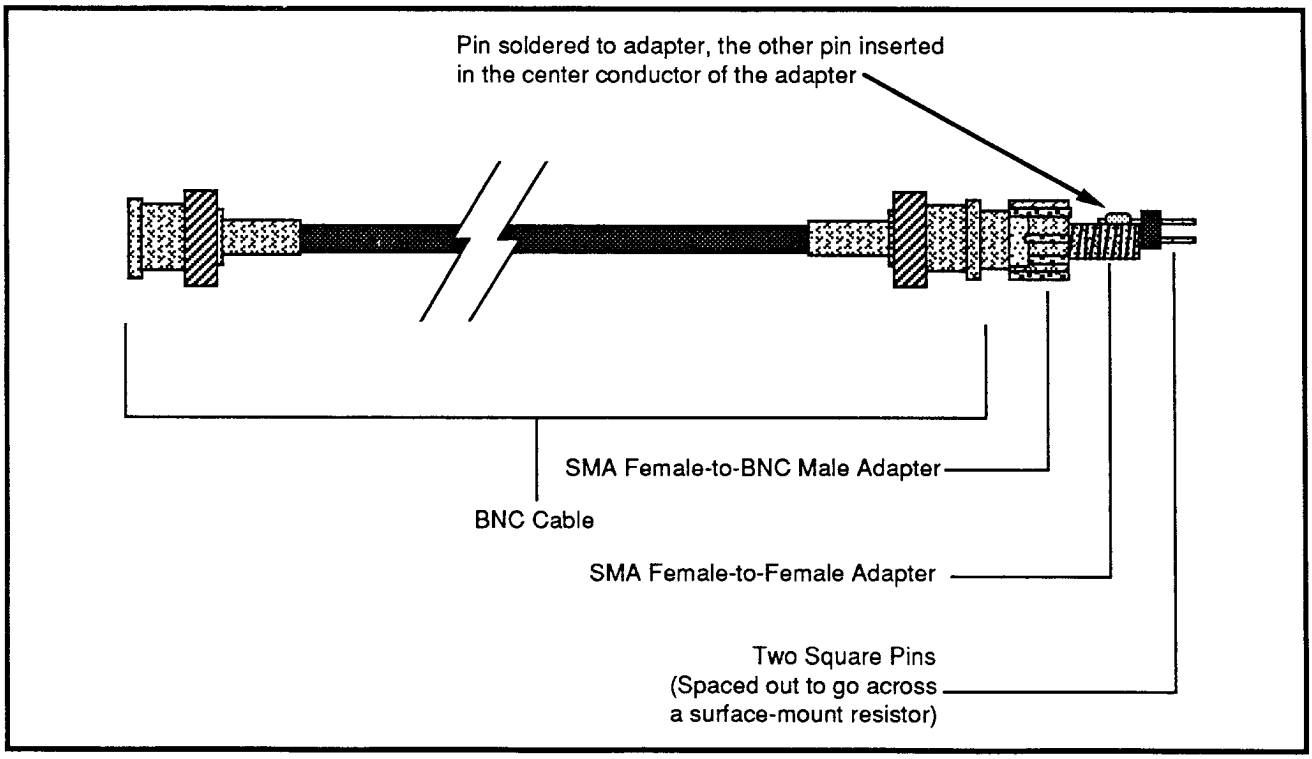

Figure 4-16. Special probe construction.

d. Adjust Flatness
(R203, R214, and R329 on the Interface board)

NOTE

This procedure uses a saved instrument flatness display to cancel out any instrument contributions to flatness.

This method makes it easy to adjust and check flatness but has ≈0.4 dB of error built in. If flatness is within 0.4 dB of specification, it will have to be verified manually with a power meter: Connect a power meter to the tracking generator output and monitor the power level while sweeping the 2712 with manual scan.

Preparation – Perform a flatness check for the spectrum analyzer only. Refer to performance check, step 6, parts a through d in Section 3 of this manual; except that the spectrum analyzer reference level must be set at +4 dBm, SWEEP RATE at 5 ms/div, and the sweeper output level set to 0 dBm @ 100 MHz.

Save the spectrum analyzer flatness display in the A register (SAVE ENABLE A); then save instrument settings in NVRAM by pressing UTIL 1 8 X.

(1) Connect the tracking generator Output to the RF INPUT.

(2) Enable the 105.5 MHz oscillator by pressing UTIL 5 7 4. (This enables the tracking generator.)

(3) Set the tracking generator output attenuation to 0 dB by pressing 0 0 Y.

(4) Set the AMPLITUDE DAC VALUE to 1600 by pressing 2, entering 1600, and pressing keypad W to terminate the entry. Press any menu button to exit the menu.

(5) Recall the saved spectrum analyzer flatness display settings by pressing UTIL 1 8 W.

(6) Enable B, C MINUS A mode by pressing DSPL 2 and B, C MINUS A OFFSET TO CENTER by pressing DSPL 3. Turn off all displays except the B DISPLAY.

(7) Connect the tracking generator output to the RF INPUT.

(8) Set R329 (Figure 4-17) on the Interface board for a signal near mid-screen.

(9) Adjust R203 and R214 (Figure 4-17) on the Interface board for the flattest possible display.

(10) Set the FREQUENCY to 100 MHz and enable ZERO SPAN.

(11) Monitor TP650 on the Phase Lock Loop board with a voltmeter.

(12) Adjust the printed capacitor (Figure 4-15) on the Phase Lock Loop board as follows:

The capacitor is composed of a main element and six little squares printed on the circuit board. Connect one square at a time to the main element with a little dab of solder. As a square is connected to the capacitor, the voltage at TP650 will either increase or decrease. If the voltage starts to go negative as a square is connected, disconnect that square. The capacitor is now properly adjusted.

(13) Adjust R329 (Figure 4-17) on the Interface board for 0 dBm at 100 MHz (four divisions down from top-screen).

(14) Set the AMPLITUDE DAC VALUE to 4095 by pressing UTIL 5 7 2, entering 4095, and pressing W to terminate the entry. Press any menu button to exit the menu.

(15) Monitor the tracking generator with the power meter.

(16) Check that the level at 100 MHz is ≥+4 dBm.

(17) Turn the FREQ/MKRS knob one click counter-clockwise (DAC VALUE = 0).

(18) Check that the level at 100 MHz is ≤–4 dBm.

(19) Set the AMPLITUDE DAC VALUE to 1600 by pressing UTIL 5 7 2, entering 1600, and pressing W to terminate the entry. Press any menu button to exit the menu.

(20) Check flatness as follows:

(a) Check that flatness, excluding the start spur, is ≤2 dB peak-to-peak from 100 kHz to 1 GHz.

(b) Check that flatness, excluding the start spur, is ≤3 dB peak-to-peak from 100 kHz to 1.8 GHz.

(21) Recall default power-up settings by pressing UTIL 1 1.

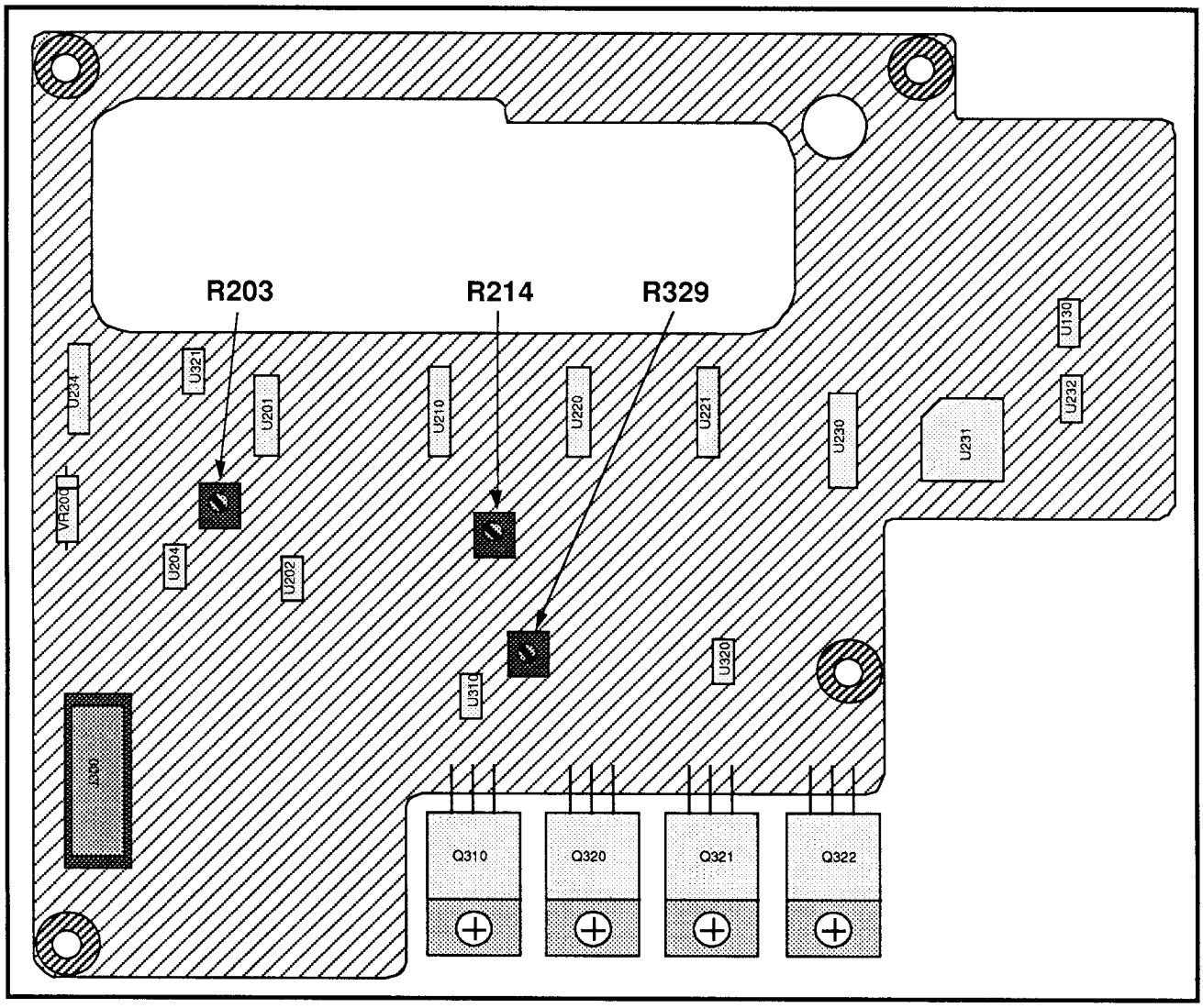

Figure 4-17. Adjustment locations on the Interface board.

e. Adjust Attenuator Flatness

(1) Connect the tracking generator Output to the RF INPUT.

(2) Recall default normalization values for the Tracking Generator by pressing UTIL 5 5 3 9 Y.

(3) Enable the 105.5 MHz oscillator by pressing UTIL 5 7 4. This enables the tracking generator.

(4) Set the tracking generator output attenuation to 0 dB by pressing 0 0 Y.

(5) Set the AMPLITUDE DAC VALUE to 1600 by pressing 2, entering 1600, and pressing W to terminate the entry. Press any menu button to exit the menu.

(6) Select the following settings on the spectrum analyzer/ tracking generator system:

SPAN/DIV	MAX SPAN
RES BW	AUTO
VERT SCALE	1DB/DIV

(7) Set the spectrum analyzer/tracking generator system reference level such that the entire trace is on screen.

(8) Save the trace in the A register, then enable B, C MINUS A mode by pressing DSPL 2.

(9) Turn off all displays except the B DISPLAY.

(10) Note the ATTEN value at the upper right corner of the display. Enter the value noted by pressing INPUT 5, entering the noted value, and terminating with W.

(11) There should be a straight horizontal line at the center of the screen. If not, check to see that B, C MINUS A OFFSET is set to CENTER (DSPL 3).

(12) Enable the 4 dB attenuator at the tracking generator output by pressing UTIL 5 7 4 Y. Press any menu button to exit the menu.

(13) Increase the reference level by 4 dB.

(14) Check that the trace is within 1 dB of center screen at 100 MHz, and check that the total excursion of the trace from 100 kHz to 1.8 GHz is no more than 1 dB.

(15) If the trace is not within 1 dB of center screen, add a "bendy" tab (adjustment wire) to the attenuator pad. See Figure 4-18.

(16) Adjust the bendy tab such that the trace is within 1 dB of center screen.

(17) Enable the 8 dB attenuator at the tracking generator output by pressing UTIL 5 7 8 Y. Press any menu button to exit the menu.

(18) Increase the reference level by 4 dB.

(19) Check that the trace is within 1 dB of center screen at 100 MHz, and check that the total excursion of the trace from 100 kHz to 1.8 GHz is no more than 1 dB.

(20) If the trace is not within 1 dB of center screen, add a bendy tab to the attenuator pad. See Figure 4-18.

(21) Adjust the bendy tab such that the trace is within 1 dB of center screen.

(22) Enable the 16 dB attenuator at the tracking generator output by pressing UTIL 5 7 16 Y. Press any menu button to exit the menu.

(23) Increase the reference level by 8 dB.

(24) Check that the trace is within 1 dB of center screen at 100 MHz, and check that the total excursion of the trace from 100 kHz to 1.8 GHz is no more than 1 dB.

(25) If the trace is not within 1 dB of center screen, add a bendy tab to the attenuator pad. See Figure 4-18.

(26) Adjust the bendy tab such that the trace is within 1 dB of center screen.

(27) Enable the 20 dB attenuator at the tracking generator output by pressing UTIL 5 7 20 Y. Press any menu button to exit the menu.

(28) Increase the reference level by 4 dB.

(29) Check that the trace is within 1 dB of center screen at 100 MHz, and check that the total excursion of the trace from 100 kHz to 1.8 GHz is no more than 1 dB.

(30) If the trace is not within 1 dB of center screen, add a bendy tab to the attenuator pad. See Figure 4-18.

(31) Adjust the bendy tab such that the trace is within 1 dB of center screen.

f. Perform Tracking Generator Normalizations

Run tracking generator normalizations by pressing UTIL 5 5 3 9 and following screen prompts.

2. Adjust Video Monitor (Option 10)

(R640 and R740 on the Sweep board)

Test equipment required:

- TV Visual Carrier Source
- Test Cable (See Figure 4-19)

a. Press UTIL 0 to initialize instrument settings. Set SPAN/DIV to 2 MHz and RESOLUTION BW to 5 MHz.

b. Connect an RF visual carrier to the RF INPUT such as from a TV antenna.

c. Tune the spectrum analyzer to a TV visual carrier via UTIL 2 0. See Table 4-3 for visual carrier frequencies.

d. Set video signal parameters by pressing DEMOD/TG 9 and selecting BROADCAST VIDEO DETECT MODE, POSITIVE SYNC POLARITY, and NEGATIVE VIDEO POLARITY. Press any menu button to exit the menu.

e. Set the peak carrier level at the top graticule line (REF LEVEL ↓ or ↑).

f. Enable the broadcast (AM) video mode by pressing DEMOD/TG 3, and set the LEVEL control for minimum flicker in the displayed picture.

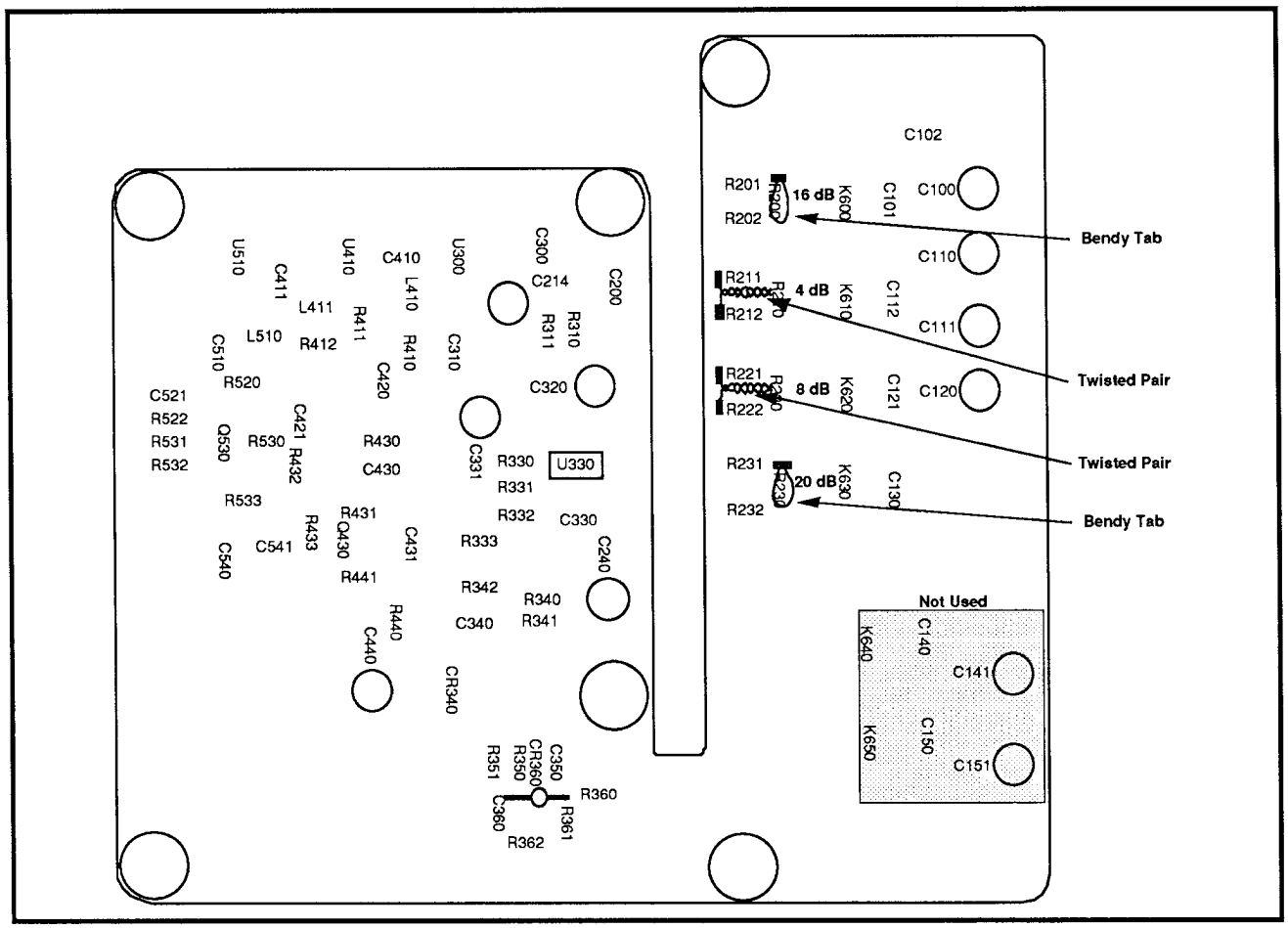

Figure 4-18. Twisted pairs and bendy tab locations on the Attenuator (Amplifier board).

g. Adjust R640 on the Sweep board (Figure 4–20) to move the bottom of the scan to the bottom graticule line.

Table 4-3
TELEVISION CHANNELS

Channel	Visual Carrier
2	55.25 MHz
3	61.25 MHz
4	67.25 MHz
5	77.25 MHz
6	83.25 MHz
7	175.25 MHz
8	181.25 MHz
9	187.25 MHz
19	193.25 MHz
11	199.25 MHz
12	205.25 MHz
13	211.25 MHz

NOTE

The aural carrier is 4.5 MHz away from the visual carrier. Carrier frequencies for Channels A through W and 14 through 83 are omitted from this table.

h. Adjust the FM detector as follows:

(1) Connect the detector test cable from J103 on the rear of the instrument to TP8 on the Sweep board. See Figure 4-20 for the location of TP8 (feed-through hole).

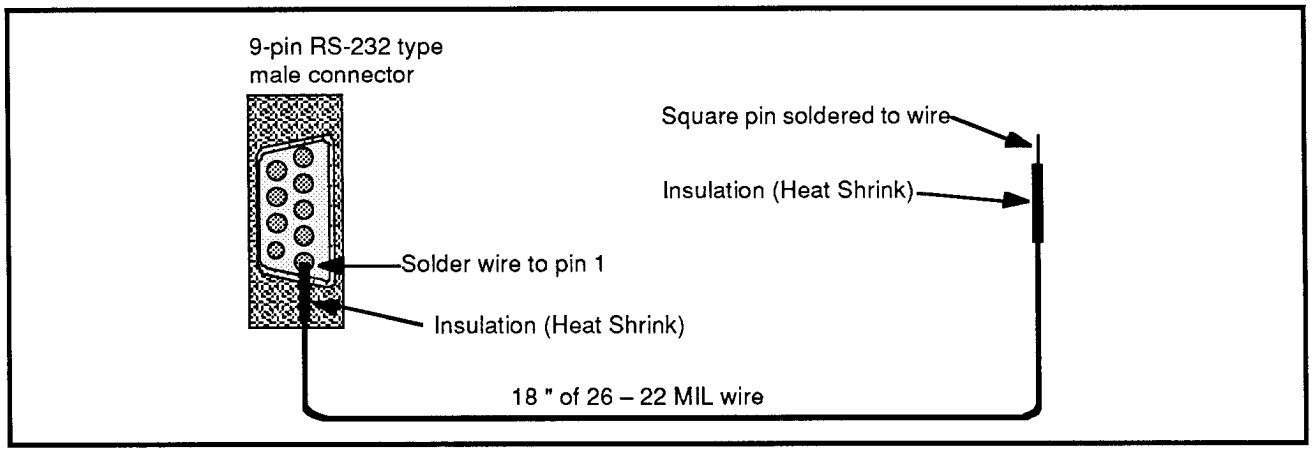

Figure 4-19. Detector test cable construction.

(2) Select the following settings on the test spectrum analyzer:

FREQUENCY	100 MHz
REF LEVEL	–30 dBm
SPAN/DIV	10 MHz

(3) Enable the Calibrator by pressing INPUT 9.

(4) Center the signal by pressing CTR MEAS/TRKG.

(5) Enable external video by pressing DSPL 7. This key stroke sequence also puts the instrument into zero span.

(6) Press ZERO SPAN to disable zero span.

(7) Disconnect the 110 MHz IF cable from J750 on the Sweep board.

(8) Adjust the R740 (FM Video Offset) on the Sweep board (Figure 4-20) to bring the horizontal line to center screen.

(9) Reconnect the 110 MHz IF cable to J750 on the Sweep board.

(10) Adjust C781 on the Sweep board (Figure 4-20) to bring the left edge of the waveform to the center vertical graticule line (±0.5 minor division). See Figure 4-21.

(11) Remove the detector test cable.

(12) Connect a FM video signal to the RF IN.

(13) Tune the spectrum analyzer to an FM visual carrier.

(14) Set FM (Satellite) video signal parameters by pressing DEMOD/TG 9 and selecting SATELLITE VIDEO DETECT MODE, NEGATIVE SYNC POLARITY, and POSITIVE VIDEO POLARITY. Press any menu button to exit the menu.

(15) Set the peak carrier level at the top graticule line.

(16) Enable the FM video mode by pressing DEMOD/TG 3, and set the LEVEL control for minimum flicker in the displayed picture.

(17) Adjust R740 on the Sweep board for best contrast in the picture.

(18) Initialize instrument settings by pressing UTIL 0. If user-defined power-up settings exist, the instrument will recall those settings. If no user-defined power-up settings exist, the instrument will recall factory default power-up settings.

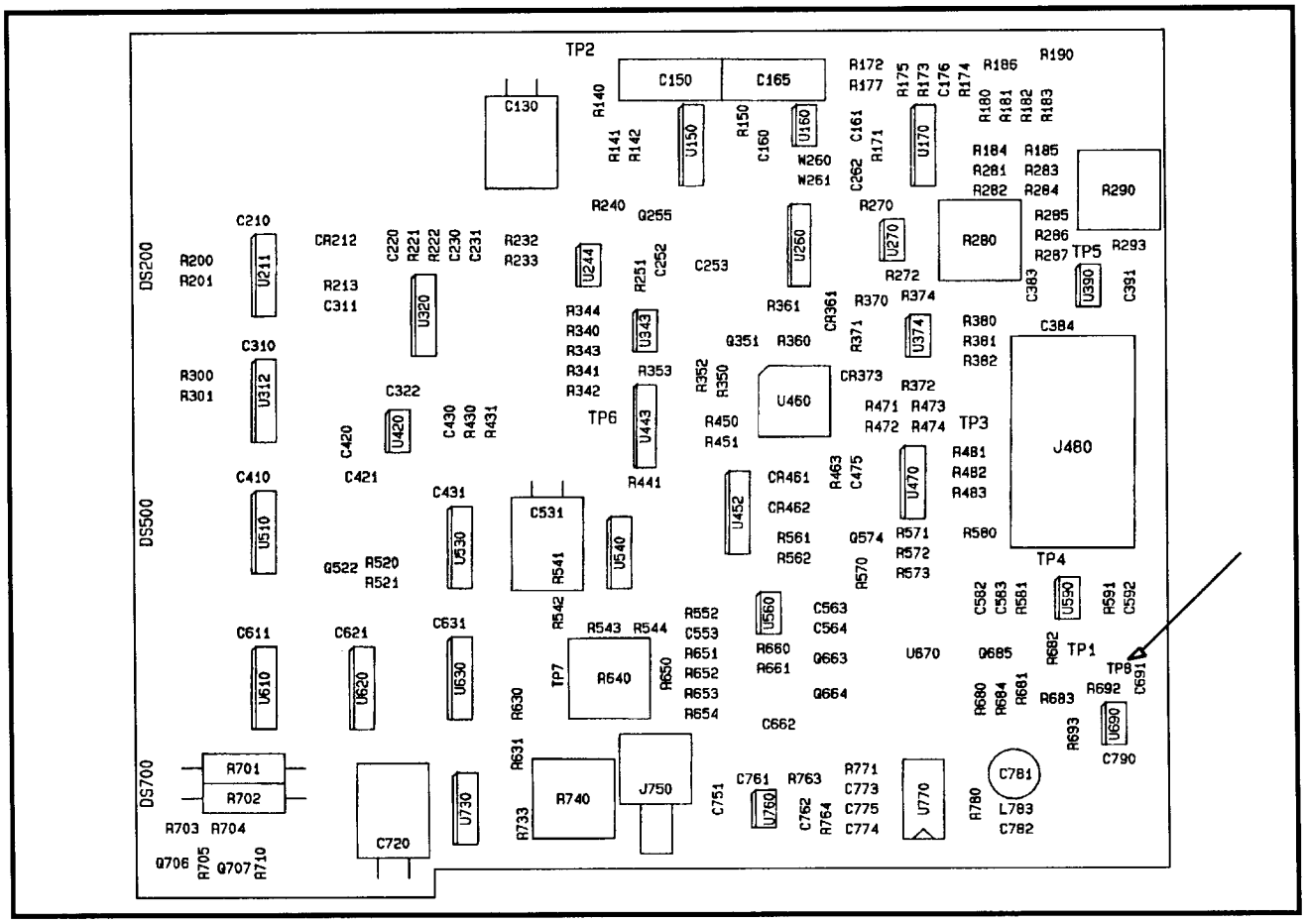

Figure 4-20. Location of TP8 on the Sweep board.

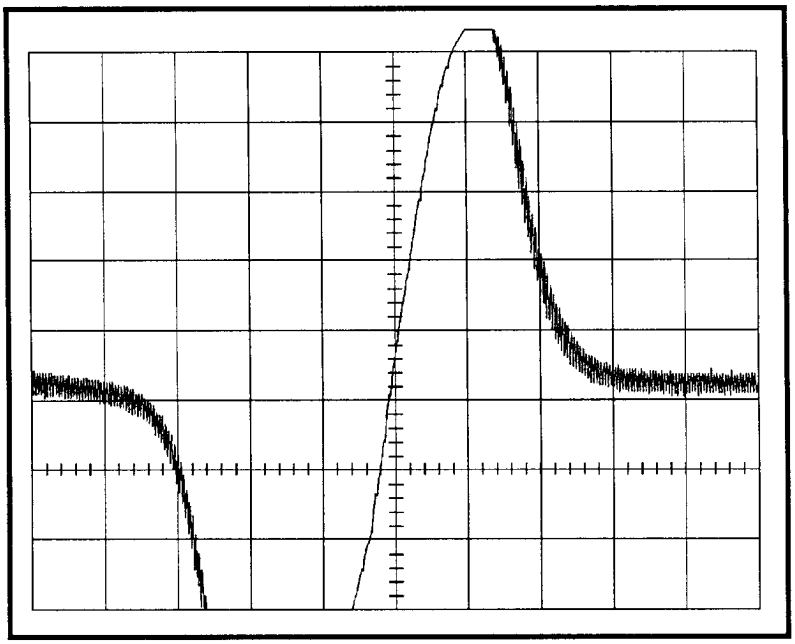

Figure 4-21. Typical FM adjustment waveform.

MAINTENANCE

INTRODUCTION

This section describes procedures for reducing and preventing instrument malfunction, troubleshooting methods, corrective maintenance, and procedures for recalibrating those assemblies that normally do not require routine calibration.

Static-Sensitive Components

CAUTION

Static discharge can damage any semiconductor component in this instrument.

This instrument contains electrical components that can be damaged by static discharge. See Table 5-1 for the relative susceptibility of various classes of semiconductors. Static voltages of 1 kV to 30 kV can occur in unprotected environments.

Observe the following precautions to avoid damage:

1. Minimize handling of static-sensitive components.

2. Transport and store static-sensitive components or assemblies in their original containers, on metallized or conductive foam. Label packages that contain static-sensitive assemblies or components.

3. Discharge body static voltage by wearing a grounded wrist strap while handling these components. Static-sensitive assemblies or components should be handled and serviced only at static-free work stations by qualified service personnel.

4. Nothing capable of generating or holding a static charge should be allowed on the work station surface.

5. Keep the component leads shorted together whenever possible.

6. Pick up components by the body, never by the leads.

7. Do not slide the components over any surface.

8. Avoid handling components in areas that have a floor or work-surface covering capable of generating a static charge.

9. Use a soldering iron that is connected to earth ground.

10. Use only special anti-static suction-type or wick-type desoldering tools.

Table 5-1
RELATIVE SUSCEPTIBILITY TO STATIC DISCHARGE DAMAGE

Semiconductor Classes	Relative Susceptibility Levels [1]
MOS or CMOS microcircuits or discretes, or linear microcircuits with MOS inputs. (Most Sensitive)	1
ECL	2
Schottky signal diodes	3
Schottky TTL	4
High-frequency bipolar transistors	5
JFET devices	6
Linear microcircuits	7
Low-power Schottky TTL	8
TTL (Least Sensitive)	9

Voltage Equivalent for Levels:

1 = 100 to 500 V	**4 = 500 V**	**7 = 400 to 1000 V (est)**
2 = 200 to 500 V	**5 = 400 to 600 V**	**8 = 900 V**
3 = 250 V	**6 = 600 to 800 V**	**9 = 1200 V**

[1] Voltage discharged from a 100 pF capacitor through a resistance of 100 Ω.

PREVENTIVE MAINTENANCE

Preventive maintenance consists of cleaning, visual inspection, performance check, and recalibration. The preventive maintenance schedule that is established for the instrument should be based on the environment in which the instrument is operated and the amount of use. A preventive maintenance check should be performed every 2,000 hours of instrument operation.

Cleaning

Clean the instrument often enough to prevent dust or dirt from accumulating in or on it. Accumulation of dirt and grease acts as a thermal insulating blanket, prevents efficient heat dissipation, and provides high-resistance leakage paths between conductors or components in a humid environment.

Exterior: Clean the dust from the outside of the instrument by wiping or brushing the surface with a soft cloth or small brush. The brush will remove dust from around the front-panel selector buttons. Hardened dirt can be removed with a cloth dampened in water that contains a mild detergent. Abrasive cleaners should not be used.

Interior: Clean the interior by loosening accumulated dust with a dry soft brush, then remove the loosened dirt with low pressure air to blow the dust clear. (High velocity air can damage some components.) Hardened dirt or grease may be removed with a cotton tipped applicator dampened with a solution of mild detergent in water. Do not leave detergent on critical memory components. Abrasive cleaners should not be used. If the circuit board assemblies need cleaning, remove the circuit board by referring to the instructions under Corrective Maintenance in this section.

After cleaning, allow the interior to thoroughly dry before applying power to the instrument.

CAUTION

Do not allow water to get inside any enclosed assembly or components such as the hybrid assemblies, RF Attenuator assembly, potentiometers, etc. Instructions for removing these assemblies are provided in the Corrective Maintenance part of this section. Do not clean any plastic materials with organic cleaning solvents such as benzene, toluene, xylene, acetone or similar compounds because they may damage the plastic.

Fixtures and Tools for Maintenance

The following is a list of tools and fixtures that are needed to service the spectrum analyzer:

- Screwdriver, flat, with 1/4 to 3/8-inch bit
- Screwdriver, Posidrive 440-2
- Screwdrivers, Torx® T15 and T20
- Wrench, 5/16-inch open-end
- Hex drive wrenches, 3/32, 5/64,7/64-inch
- Torque Wrench Kit
- Torque Wrench Kit

An optional service kit (the Extender Kit) is available to aid in servicing the Spectrum Analyzer. The Extender Kit consists of the following:

- Main Extender Board
- Small Extender Board
- Extender Board for the 300 Hz Bandpass Filter board
- Three SMB male-to-female cables
- Two SMA male-to-male cables
- Two SMA female-to-female adapters
- Female BNC to female SMB cable
- Male BNC to square pin cable
- Data sheet

The Main Extender is to be used with all circuit boards that use the 50-conductor microprocessor bus cable. The Secondary Extender card is added to the Main Extender for use with the Log and Phase Lock CFC boards. See Figure 5-1.

On the Main Extender, signal lines and power supply lines from the bottom edge connector to the pins at the top edge of the Extender are completed by a set of two-pin jumpers (excluding two ground lines and the 50-conductor microprocessor bus cable). Thus, except for the two ground lines, all signal and power supply lines are interruptible via these two-pin jumpers.

Signal lines are brought to square pins where they can be steered to one of two BNC connectors on the Main Extender. See Figure 5-2. There are 20 rows of 3-pin sets numbered 1 through 12 and 17 through 24. The numbers correspond to pin numbers of the interconnect system on the Power Supply board. Placing a jumper at position A in Figure 5-2 steers the selected signal to BNC connector A, and a jumper at position B steers the signal to connector B. Consequently, a maximum of two signals may be steered to the BNC connectors at any one time.

Conversely, an external signal may be injected on any one of these signal lines by removing the proper jumper on the signal line, selecting a BNC connector, and applying the external signal to the selected connector.

The double shielded coaxial cables with SMB connectors and the coaxial cable with square pin connectors are for interboard connections when needed.

Visual Inspection

After cleaning, carefully check the instrument for such defects as defective connections and damaged parts. The remedy for most visible defects is obvious. If heat-damaged parts are discovered, try to determine the cause of overheating before the damaged part is replaced; otherwise, the damage may be repeated.

Transistor and Integrated Circuit Checks

All transistors and integrated circuits are soldered on the boards to prevent pin contact problems. Periodic checks of the transistors and integrated circuits is not recommended. The best measure of performance is the actual operation of the component in the circuit. In most cases any degradation in performance will be detected by the microprocessor during power-up. Performance of these components is also checked during NORMALIZATION; any sub-standard transistors or integrated circuits will usually be detected at that time.

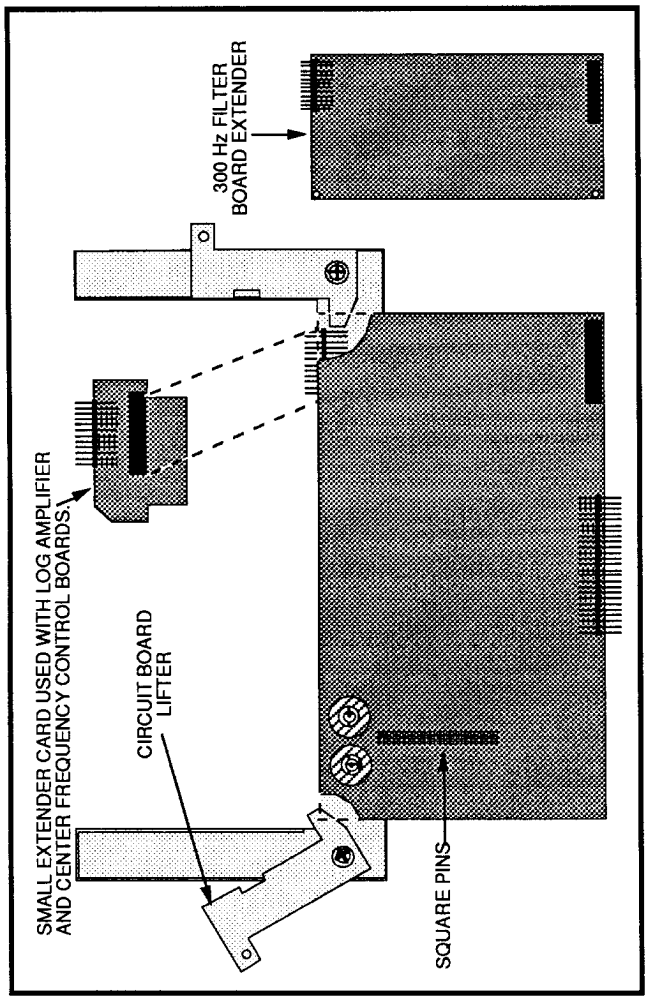

Figure 5-1. Main Extender and Secondary Extender.

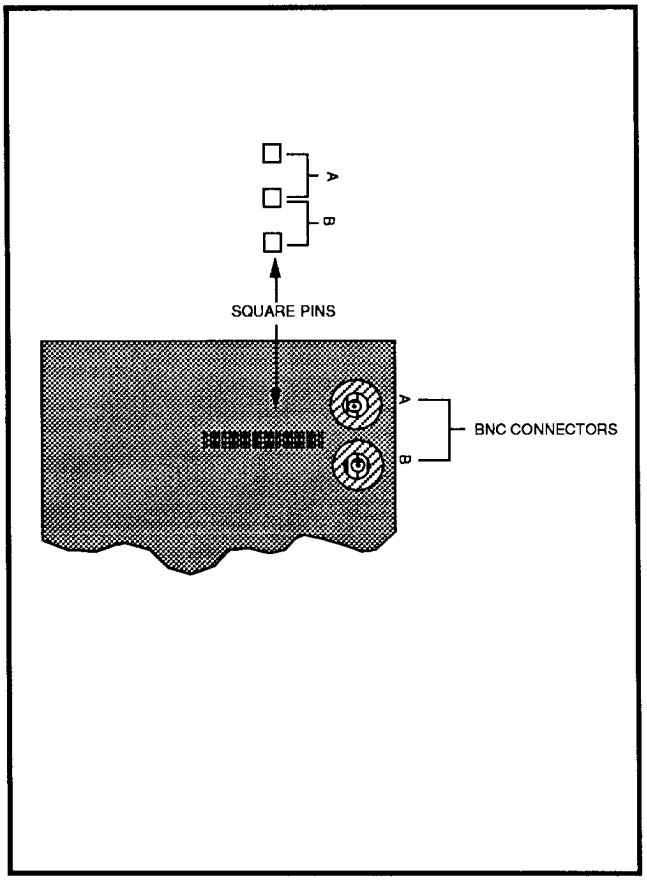

Figure 5-2. Signal steering square pins.

Performance Checks and Recalibration

The instrument performance should be checked after each 2000 hours of operation or every 12 months, if the instrument is used intermittently, to ensure maximum performance and assist in locating defects that may not be apparent during regular operation. Instructions for conducting a performance check are provided in Section 3 of this manual.

Stored Data in Non-Volatile Memory

Data stored in non-volatile memory will be lost If backup-battery power to the memory is interrupted, such as when changing the battery.

TROUBLESHOOTING

The spectrum analyzer contains firmware that will troubleshoot the frequency control system. After a defective assembly or component is located, refer to the Removing and Replacing Assemblies and Sub-Assemblies in this section for removal and replacement instructions.

Troubleshooting Aids

Diagrams – Functional block and circuit diagrams, on foldout pages in the Diagrams section, contain significant waveforms, voltages, and logic data information. Conditions for getting the data are provided on the diagram or adjacent to it. Refer to the Replaceable Electrical Parts list section for a description of all assemblies and components.

The Replaceable Electrical Parts list indicates changes to diagrams with serial numbers showing the first serial number when usage of the part occurred and the last serial number when usage of the part stopped. Absence of serial numbers indicates the parts were in use since the first instrument shipped. When a major modification is made to an assembly or board and it is no longer compatible with earlier instruments, a new part number is assigned and a separate schematic with associated illustrations are added. All diagrams indicate the new part number and the instrument serial number break. If the assembly is compatible with earlier instruments and the change is significant enough to require a separate schematic, this will also be identified.

NOTE

Corrections to the manual and instrument modifications are documented by adding correction pages behind a tabbed page, labeled Change Information, at the rear of the manual. Check this Change Information section for changes to the manual or the instrument.

Circuit Board Illustrations and Component Locator Charts – Electrical components, connectors, and test points are identified on circuit board illustrations that are located on the inside fold of the corresponding circuit diagram or the back of the preceding diagram. A grid on the circuit board illustration and the circuit schematic, plus a look-up table, provide the means to quickly locate components on either the diagram or the circuit board.

In most cases, circuit numbers are assigned according to the physical location of the component on the board or assembly. The first digit designates the row of a grid, the second the column, and the third an expander.

General Troubleshooting Techniques

Before using test equipment to measure across static-sensitive components or assemblies, be certain that voltages and currents supplied by the test equipment do not exceed the limits of the components to be tested.

Try to isolate the problem to a component through signal analysis. Determine that circuit voltages will not damage the replacement.

Semiconductor Checks – Semiconductor failures account for the majority of electronic equipment failures. All semiconductors are soldered to the boards to reduce pin contact problems. Follow these guidelines when substituting any of these semiconductors.

1. Always turn the power off before removing an assembly or circuit board.

2. Use a hot air repar terminal to remove surface-mounted components, and a 15 W or less soldering iron to remove components with leads.

3. Use only good components for substitution. Be sure the new component is inserted into the board properly before soldering. Refer to the manufacturer's data sheet for integrated circuit and transistor lead configuration.

Diode Checks – Most diodes can be checked in the circuit by taking measurements across the diode and comparing these with voltages listed on the diagram. Forward-to-back resistance ratios can usually be taken by referring to the schematic and pulling appropriate transistors and pin connectors to remove low resistance loops around the diode.

CAUTION

Do not use an ohmmeter scale with a high external current to check diode junctions. Do not check the forward-to-back resistance ratios of mixer diodes.

Diagnostic Firmware

The firmware in the spectrum analyzer provides diagnostic routines that can be used to troubleshoot the Frequency Control system. The following are also some general suggestions that may help isolate a problem when troubleshooting.

Troubleshooting Steps

1. Ensure that the problem exists in the spectrum analyzer by checking the operation of associated test equipment.

2. Try to isolate the problem to a circuit or at least to the board level by evaluating operational symptoms; for example, absence of the frequency dot could be caused by a malfunction in the marker generator or switching circuits.

3. Visually inspect the area or assembly for such defects as broken or loose connections, improperly connected components, overheated or burned components, chafed insulation, and so forth. Repair or replace all obvious defects. In the case of overheated components, try to determine the cause of the overheated condition and correct before applying power.

4. Use successive electrical checks to try to locate the problem. An oscilloscope is a valuable test item for evaluating circuit performance. If applicable, check the calibration adjustments; however, before changing an adjustment, note its position so it can be returned to its original setting. This will facilitate recalibration after the trouble has been located and repaired.

5. Determine the extent of the repair needed; if complex, we recommend contacting your local Tektronix Field Office or representative. If minor, such as a component replacement, see the Replaceable Parts list for replacement information. Removal and replacement procedure of the assemblies and sub-assemblies are described under Corrective Maintenance.

CAUTION

When measuring voltages and waveforms, use extreme care with the placement of test probes. Because some circuit boards have a high component density, access to points in some circuits is limited. A test probe could accidentally short a circuit and generate transient voltages that can destroy many static-sensitive components.

CAL DEBUG FLAGS

From time to time, certain screen messages are displayed when normalizations are performed with the **CAL DEBUG FLAGS** turned on (UTIL MENU/#5/#3/#4). The following is a list of all possible messages which the normalizations can produce.

Message	Meaning
"ERROR in REF GAIN STEP OFF: Cannot set external signal near full screen"	The signal could not be placed at or above full screen by reducing RF attenuation.
"ERROR in REF GAIN STEP OFF: Cannot set signal to 0.75 division from full screen"	The signal could not be placed exactly 0.75 division below full screen by using only the VR fine gain DAC.
"ERROR in REF GAIN STEP ON: External signal at incorrect level"	The signal did not drop at least 70 storage locations when the operator reduced the signal by 10 dB (lin mode).
"ERROR in REF GAIN STEP ON: Cannot measure lin mode sensitivity"	The calculations for lin mode sensitivity were outside of reasonable limits.
"ERROR in REF GAIN STEP ON: Result out of range"	The calculated result for this test was outside of reasonable limits.
"ERROR in REF FREQUENCY: Cannot count reference signal"	The user-applied reference signal could not be counted using the center-measure function.
"ERROR in REF FREQUENCY: Result out of range"	The calculated result for this test was outside of reasonable limits.
"ERROR in REF AMPLITUDE: Cannot span down on external signal (1)"	The externally-applied signal could not be set to zero span, 5 MHz filter. Probably due to frequency instability in the signal or the instrument.
"ERROR in REF AMPLITUDE: Cannot set calibrator to full screen"	The user-applied reference signal could not be set a half a division from full screen using VR gain steps, RF attenuators, and the VR fine gain DAC.
"ERROR in REF AMPLITUDE: No amplitude change when 10 dB step changes"	The 10 dB reference step was removed to calculate the lin mode sensitivity. The amplitude did not change.
"ERROR in REF AMPLITUDE: Lin mode sensitivity out of range"	The calculations for lin mode sensitivity were outside of reasonable limits.
"ERROR in REF AMPLITUDE: Cannot span down on calibrator"	The internal calibrator signal could not be set to zero span, 5 MHz filter. Probably due to frequency instability in the signal or the instrument.
"ERROR in REF AMPLITUDE: Result out of range"	The calculated result for this test was outside of reasonable limits.
"ERROR in VCO UPPER SENS: Cannot count phase lock VCO"	The LF VCO could not be counted at some point on the Upper VCO DAC.
"ERROR in VCO UPPER SENS: Result out of range"	The calculated result for this test was outside of reasonable limits.

Message	Meaning
"ERROR in VCO UPPER SENS: Cannot calculate polynomial"	The coefficients for the curve-fitting algorithm could not be calculated. One of the 20 sample points taken along the VCO curve were probably in error.
"ERROR in VCO LOWER SENS: Cannot count phase lock VCO (1)"	The LF VCO could not be counted when the upper VCO DAC was set for a VCO frequency of approximately 13.4 MHz and the lower VCO DAC was at center (2047).
"ERROR in VCO LOWER SENS: Cannot count phase lock VCO (2)"	The LF VCO could not be counted when the upper VCO DAC was set for a VCO frequency of approximately 13.4 MHz and the lower VCO DAC was at its upper limit (4095).
"ERROR in VCO LOWER SENS: Result out of range"	The calculated result for this test was outside of reasonable limits.
"ERROR in VCO SENS @ 13 MHZ: Cannot calculate result"	The LF VCO DAC calculator failed to find a proper VCO sensitivity when given a frequency of 13 MHz. This should never happen if the Upper VCO normalization worked properly.
"ERROR in VCO SENS @ 13 MHZ: Result out of range"	The calculated result for this test was outside of reasonable limits.
"ERROR in MAIN DAC OFFSET: Cannot center start spur"	Beginning at 10 MHz/div span, the start spur was located and centered, then span was reduced. In 1 MHz/div span, the signal could not be centered within 30 horizontal storage bits.
"ERROR in MAIN DAC OFFSET: Cannot count beat frequency (1)"	The beat frequency was connected to the counter, but an attempt at counting was unsuccessful. This attempt occurred when the start spur was within 300 kHz of center screen, producing a beat frequency of approximately 5 MHz.
"ERROR in MAIN DAC OFFSET: Cannot set main DAC low enough"	To actually center the start spur, a DAC value < 1 was requested.
"ERROR in MAIN DAC OFFSET: Cannot count beat frequency (2)"	The beat frequency was connected to the counter, but an attempt at counting was unsuccessful. This attempt occurred when the start spur was within 300 kHz of center screen, producing a beat frequency of approximately 5 MHz.
"ERROR in MAIN DAC OFFSET: Result out of range"	The calculated result for this test was outside of reasonable limits.
"ERROR in MAIN DAC SENS: Cannot count beat frequency (3)"	The beat frequency should have been around 10 MHz, but was not countable. This count was done at approximately 900 MHz CF.
"ERROR in MAIN DAC SENS: YIG cannot be counted at 0 MHz".	The 1st LO frequency could not be determined after a series of LF VCO and beat frequency counts. This was tried at approximately 0 MHz (2110 MHz 1st LO frequency).

Message	Meaning
"ERROR in MAIN DAC SENS: YIG cannot be counted at 80% of CF range".	The 1st LO frequency could not be determined after a series of LF VCO and beat frequency counts. This was tried at approximately 1440 MHz (3550 MHz 1st LO frequency).
"ERROR in MAIN DAC SENS: Result out of range (1)".	The intermediate result predicted a main DAC value greater than 4095 at 1800 MHz.
"ERROR in MAIN DAC SENS: YIG cannot be counted at 100% of CF range".	The 1st LO frequency could not be determined after a series of LF VCO and beat frequency counts. This was tried at approximately 1800 MHz (3910 MHz 1st LO frequency).
"ERROR in MAIN DAC SENS: Result out of range (2)".	The final value calculated is outside reasonable limits.
"ERROR in MAIN DAC SENS: YIG cannot be counted at 50% of CF range".	The 1st LO frequency could not be determined at 900 MHz CF.
ERROR in FM DAC SENS: Cannot set strobe to required frequency".	The strobe frequency could not be set to a known frequency.
"ERROR in FM DAC SENS: Cannot count beat frequency (1)"	Failed to count the beat frequency while trying to set the 1st LO to a specific position (5 MHz).
"ERROR in FM DAC SENS: Cannot set beat frequency with main DAC"	5 attempts have failed to set the beat frequency to the proper location.
"ERROR in FM DAC SENS: Cannot count beat frequency (2)"	The beat frequency could not be counted when the FM DAC was set to 1.
"ERROR in FM DAC SENS: Cannot count beat frequency (3)"	The beat frequency could not be counted when the FM DAC was set to 4095.
"ERROR in FM DAC SENS: Result out of range"	The calculated result for this test was outside of reasonable limits.
"ERROR in FREQUENCY ACCY: Cannot count YIG (1)"	The 1st LO frequency could not be determined.
"ERROR in FREQUENCY ACCY: Out of range (1)"	The result was outside of acceptable limits.
"ERROR in FREQUENCY ACCY: Out of range (2)"	The result was outside of acceptable limits.
"SPANS: range X"	This is an indicator to show which span range is being tested. This is not an error message.
"ERROR in SPANS: Cannot count at center screen, DAC low"	For this span range, the effective screen frequency could not be determined when the span DAC was set to 30 and the sweep was parked at center screen.
"ERROR in SPANS: Cannot count at center screen, DAC high"	For this span range, the effective screen frequency could not be determined when the span DAC was set to 4095 and the sweep was parked at center screen.
"ERROR in SPANS: Cannot count at right screen, DAC low"	For this span range, the effective screen frequency could not be determined when the span DAC was set to 30 and the sweep was parked at right screen.

Message	Meaning
"ERROR in SPANS: Cannot count at right screen, DAC high"	For this span range, the effective screen frequency could not be determined when the span DAC was set to 4095 and the sweep was parked at right screen.
"ERROR in SPANS: Span out of range"	The calculated result for this test was outside of reasonable limits.
"ERROR in GAIN AND ATTEN: Cannot span down on calibrator (1)"	On the first attempt, the calibrator could not be centered sufficiently to go to zero span without losing the signal.
"ERROR in GAIN AND ATTEN: Cannot span down on calibrator (2)"	On the second attempt, the calibrator could not be centered sufficiently to go to zero span without losing the signal.
"ERROR in GAIN AND ATTEN: Cannot calculate lin mode sensitivity"	Lin mode sensitivity figures were outside of reasonable limits.
"ERROR in GAIN AND ATTEN: Attenuation result out of range"	One of the attenuator steps measured outside of reasonable limits.
"ERROR in GAIN AND ATTEN: Gain step result out of range"	One of the gain steps measured outside of reasonable limits.
"ERROR in VR FINE GAIN: Cannot span down on calibrator"	On the second attempt, the calibrator could not be centered sufficiently to go to zero span without losing the signal.
"ERROR in VR FINE GAIN: Cannot calculate lin mode sensitivity"	Lin mode sensitivity figures were outside of reasonable limits.
"ERROR in VR FINE GAIN: Result out of range"	The calculated result for this test was outside of reasonable limits.
"ERROR in VR FILTER AMPLTD: Cannot measure lin mode sensitivity"	Lin mode sensitivity figures were outside of reasonable limits.
"ERROR in VR FILTER AMPLTD: Cannot set filter to full screen"	The RF attenuators could not reduce the signal below full screen.
"ERROR in VR FILTER AMPLTD: Result out of range"	The calculated result for this test was outside of reasonable limits.
"ERROR in VR LOG FLTR AMPLTD: Cannot set filter to full screen"	The RF attenuation, VR gain, and VR fine gain together could not set the filter being tested to full screen.
"ERROR in VR LOG FLTR AMPLTD: Result out of range"	The calculated result for this test was outside of reasonable limits.
"ERROR in VERTICAL OFFSET: Cannot span down on calibrator"	Could not keep calibrator signal on screen when spanning down to 1 MHz span, 5 MHz filter.
"ERROR in VERTICAL OFFSET: Cannot set calibrator to full screen, scale X", where X is one of: 1 dB/div 5 dB/div 10 dB/div LIN	The signal could not be set to full screen with the RF attenuators, VR gain steps, and VR fine gain in the specified scale factor.

Message	Meaning
"ERROR in VERTICAL OFFSET: Out of range, scale X", where X is one of: 1 dB/div 5 dB/div 10 dB/div LIN	The calculated result for this test was outside of reasonable limits.
"ERROR in PREAMP GAIN: Cannot span down on calibrator"	On the second attempt, the calibrator could not be centered sufficiently to go to zero span without losing the signal.
"ERROR in PREAMP GAIN: Cannot calculate lin mode sensitivity"	Lin mode sensitivity figures were outside of reasonable limits.
"ERROR in PREAMP GAIN: Cannot bring signal on screen with attenuators"	Once the preamp was turned on, the signal could not be brought down below full screen with the RF attenuators.
"ERROR in PREAMP GAIN: Result out of range"	The calculated result for this test was outside of reasonable limits.
"ERROR in LOGGING ERROR: Lost signal while spanning down"	On the second attempt, the calibrator could not be centered sufficiently to go to zero span without losing the signal.
"ERROR in LOGGING ERROR: Cannot set signal to full screen (1)"	Initially, the calibrator signal could not be set to full screen with the RF attenuators, VR gain steps, or VR fine gain DAC.
"ERROR in LOGGING ERROR: Cannot set signal to full screen (2)"	The calibrator could not be set to full screen for one of the three log mode scale factors.
"ERROR in LOGGING ERROR: Out of range"	The calculated result for this test was outside of reasonable limits.
"ERROR in SENSITIVITY: Result out of range (1)"	The peak of the unfiltered noise floor minus the peak of the filtered noise floor was outside of reasonable limits.
"ERROR in SENSITIVITY: Result out of range (2)"	The peak sensitivity with preamp on was out of range.
"ERROR in SENSITIVITY: Result out of range (3)"	The peak sensitivity with preamp off was out of range.

CORRECTIVE MAINTENANCE

Corrective maintenance consists of component replacement and instrument repair. Special techniques and procedures that may be required to remove and replace assemblies or components in this instrument are described here.

Handling Static-Sensitive Components

Most semiconductor types, both separately and in assemblies, are susceptible to damage to static charge, see Table 5-1 for voltage levels. We recommend static-sensitive procedures be followed for all operations involving semiconductor handling.

Obtaining Replacement Parts

All electrical and mechanical parts are available through your local Tektronix Field Office or representative. The Replaceable Parts list section contains replacement parts ordering information.

Parts orientation and lead dress should be duplicated because some components are oriented to reduce interaction between circuits or control circuit characteristics.

Where applicable, an improved part will be substituted when a replacement is ordered. If the change is complex, your local Field Office or representative will contact you concerning the change. After repair, the circuits may need recalibration.

Parts Repair and Return Program

Assemblies containing hybrid circuits or substrates in a semi-sealed module and complex assemblies such as the 1st LO can be returned to Tektronix for repair under the repair and return program.

Tektronix repair centers provide replacement or repair service on major assemblies as well as the unit. Return the instrument or assembly to your local Field Office for this service, or contact your local Field Office for repair and exchange rates.

Selected Components

A few components are selected to meet certain parameters such as temperature compensation, or to center the range of some adjustable components. The selected components are identified as selectable on the circuit diagram and in the Replaceable Electrical Parts list. The Replaceable Parts list description for the component gives a nominal value. The procedure for selection is explained in the Maintenance adjustment procedure.

Replacing Firmware EPROM Devices

Firmware for the microcomputer is contained in a set of ROMs on the Microprocessor and either GPIB or RS-232 boards (when installed). Refer to the Replaceable Electrical Parts list for the versions and part numbers. Refer to Replacing Transistor and Integrated Circuit for procedure.

Surface-Mounted Components

Surface-mounted components are used in this instrument. These components are mounted on pads on the circuit board, rather than through holes in the board. (In some rare instances, components may be mounted on pads around through holes.) Lead configurations of these components are shown in Figure 5-3.

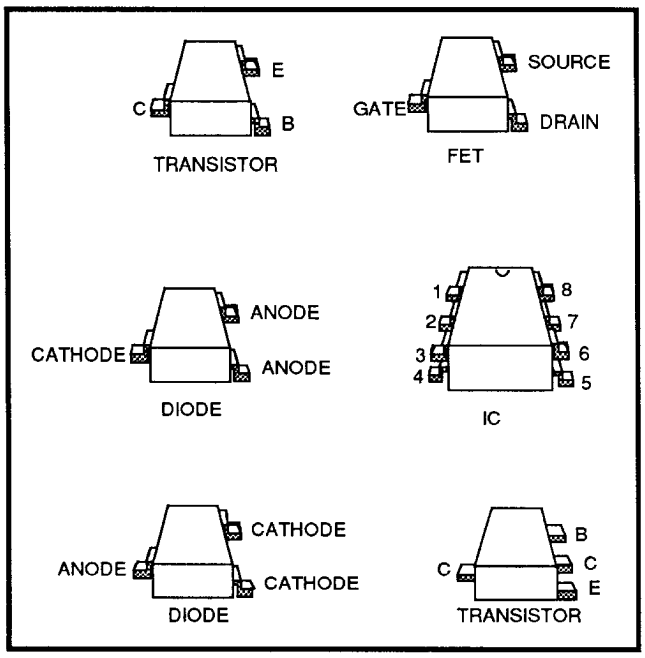

Figure 5-3. Surface-mounted components lead configuration.

The positive end of an electrolytic capacitor is identified by a band. Other capacitors and resistors have no visible identification.

Surface-mounted semiconductor devices are sensitive to static electricity discharges, and should be treated as outlined in the beginning of this section.

Table 5-2
SERVICING TOOLS FOR BOARDS WITH SURFACE MOUNTED COMPONENTS

Description	Model Type	Tektronix Part No.
Hot Air Repair Terminal	Nu-Concepts Systems HART200A	N/A
Tempilaq	Nu-Concepts Systems	N/A
Tempilaq Thinner	Nu-Concepts Systems TLTH	N/A
Flux Dispenser	Nu-Concepts Systems FD2	N/A
Soldering Iron	Hexacon Model SMD10	003-1401-00
Soldering Iron SMD Tips		
Semi-Chisel, 1/16"	Hexacon Model Z780X	003-1402-00
Conical, 1/32"	Hexacon Model Z783X	003-1403-00
Sharp Conical"	Hexacon Model Z784X	003-1404-00
Bevel, 1/32"	Hexacon Model Z786X	003-1405-00
Chisel, 1/16"	Hexacon Model Z787X	003-1406-00
Bevel, 1/16"	Hexacon Model Z788X	003-1407-00
0.062" Slot	Hexacon Model S303	003-1408-00
0.195" Slot	Hexacon Model S308	003-1409-00
0.195" Slot	Hexacon Model S314	003-1410-00
0.195" Slot	Hexacon Model S316	003-1411-00
0.195" Slot	Hexacon Modified S302	003-1412-00
Stainless Steel, Non-Magnetic Tweezers		
Straight Tip		003-0464-00
Curved Tip		003-0465-00
Silver Solder		251-0514-00

Replacing Surface-Mounted Components

A hot air machine, such as Hart Model 200A manufactured by Nu-Concept Systems Incorporated of Colmar, Pennsylvania, is recommended for unsoldering and soldering surface-mounted components.

Table 5-2 lists tools that are suitable for servicing circuit boards with surface-mounted components.

Do not apply too much heat or pull hard on the components, as the pads on which the device is soldered may be lifted from the circuit board.

1. Unsolder the component. Use a solder wick to remove access solder.

2. Clean the board with isopropyl alcohol.

3. Solder in the replacement. Surface-mounted components are pretinned, and therefore require little solder.

CAUTION

If you use a soldering iron, use one with a small tip. After applying the solder paste, touch the corner of the pad with the iron to fasten the component. Avoid touching the component with the hot soldering iron. Thermal shock causes hairline cracks that are not visible to the eye.

Soldering Techniques

CAUTION

Disconnect the instrument from its power source before replacing or soldering components.

Extreme caution must be used when removing or replacing components because the instrument contains several multi-layer circuit boards. Excess heat from the soldering iron and bent component leads may pull the plating out of the hole.

Some circuit boards do contain leaded components. To remove the component leads, use a 15 W (or less) pencil type soldering iron. Straighten the leads on the back side of the board; when the solder melts, gently pull the soldered lead through the hole. A desoldering tool should be used to remove the old solder. Use a desoldering tool that has a low build-up of static charge, such as Silverstat Soldapullt desoldering tool, when unsoldering integrated circuits or transistors.

Transistor and Integrated Circuit Configurations

Lead identification for transistors and integrated circuits is readily available from manufacturer's data books. Integrated circuit pin-outs for Vcc and ground are shown with a box on the schematic diagram. Refer to Soldering Techniques for unsoldering and soldering instructions.

Diode Color Code

The cathode of each glass encased diode is indicated by a stripe, a series of stripes, or a dot. Some diodes have a diode symbol printed on one side.

Resistor Values

Surface-mounted resistors have no visible identification. However, the value can be measured with a meter. Other types of resistors (such as composition, metal film, tapped, thick film resistor network package, plate, etc.) are also used. The value is either color-coded in accordance with the EIA color code or printed on the body of the component.

Capacitor Marking

Surface-mounted capacitors (chip capacitors) have no visible markings. The capacitance value, voltage rating, and polarity of electrolytic capacitors are marked on the side of the component body. The ceramic tubular capacitors and feed-through capacitors are color-coded in picofarads.

Multiple Terminal (Harmonica) Connectors

Some intercircuit connections are made through square- pin connectors that are mounted in a harmonica type holder. If one of the pins must be replaced, all the pins at that location must be replaced as a set. Except for two-pin connectors, the three-pin connector at the back of the Log board, and the 50-pin connector between the Microprocessor, Display Storage, and Digital Options boards, all ribbon-cable connectors are keyed. The key location on the circuit board is identified by a missing pin.

REMOVING AND REPLACING ASSEMBLIES AND SUBASSEMBLIES

Most assemblies or sub-assemblies in this instrument are easily removed and replaced. The following describes procedures for replacing those assemblies that require special attention. Top and bottom views are shown in Figure 5-4 and Figure 5-5, respectively. These illustrations show the locations of most assemblies.

The Microprocessor, Display Storage, and Digital Options boards must be placed on an extender to access test points or adjustments. A second extender card is added to the main extender for use with the Center Frequency, Log, and RF Options boards.

Turn the power off before removing an assembly.

Removing the Instrument from its Cabinet

1. Remove the power cord.

2. Set the instrument on its face with the front cover installed.

3. Remove the rear cover (two T15 Torx® head screws), two (front) top and bottom feet (four T15 screws), three pan-head screws from the bottom rear, and two pan-head screws from the top rear of the instrument.

4. Pull the cover up and off.

Replace the instrument in its cabinet by reversing the removal procedure.

Replacing the CRT

WARNING

Breaking the CRT may result in an implosion. Protective clothing and safety glasses should be worn. Avoid hitting the CRT against any object which may cause it to crack. Place the CRT in a protective carton or place it face-down on a smooth surface in a protected location with a soft mat under the face plate.

1. Remove the instrument from its cabinet (see Removing the Instrument from its Cabinet).

2. Remove the circuit board retainer.

3. Disconnect the CRT anode lead and discharge it to the main chassis.

WARNING

The CRT anode lead retains a high voltage charge after the instrument is turned off. To avoid electrical shock, ground the anode lead to the main chassis immediately after disconnecting.

4. Disconnect two-pin connector (Trace Rotation) from J930 on the Power Supply board.

5. Use a T15 Torx head driver to remove the two CRT bezel screws, and remove the bezel.

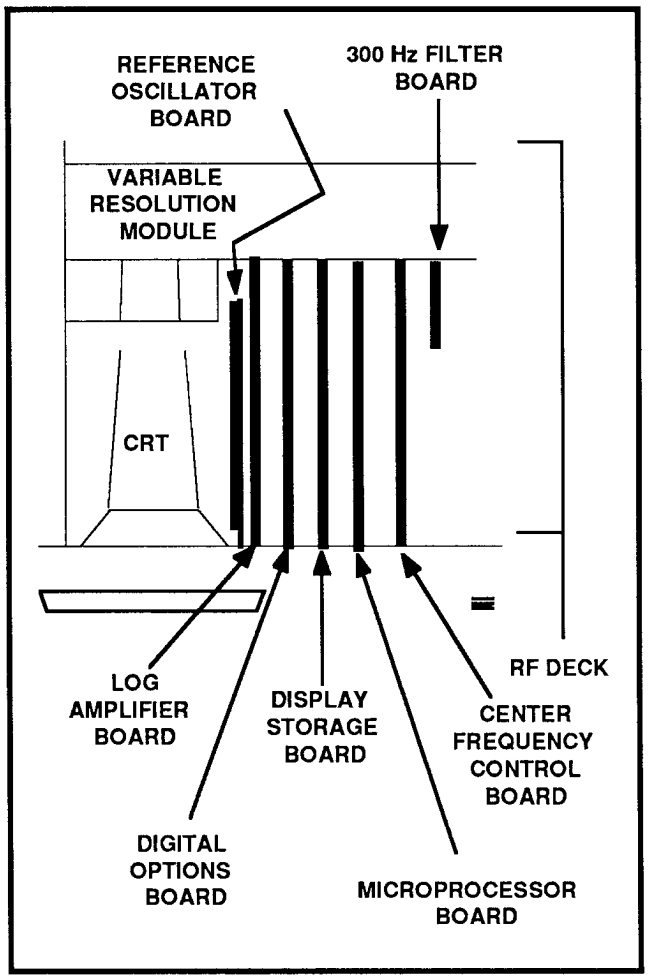

Figure 5-4. Top view of assemblies and RF Deck.

6. Remove the CRT rear cover and plastic shield.

7. Disconnect the CRT socket.

8. Slide the CRT out through the front panel.

Replace the CRT by reversing the removal procedure.

Repairing the CRT Trace Rotation Coil

The trace rotation coil is part of the CRT assembly. If the coil is damaged beyond repair, the CRT with the damaged coil must be replaced.

If the "finish" (red) lead is broken, remove the tape and unwind one or two turns so it can be respliced and soldered to the lead wire. Rewind and retape.

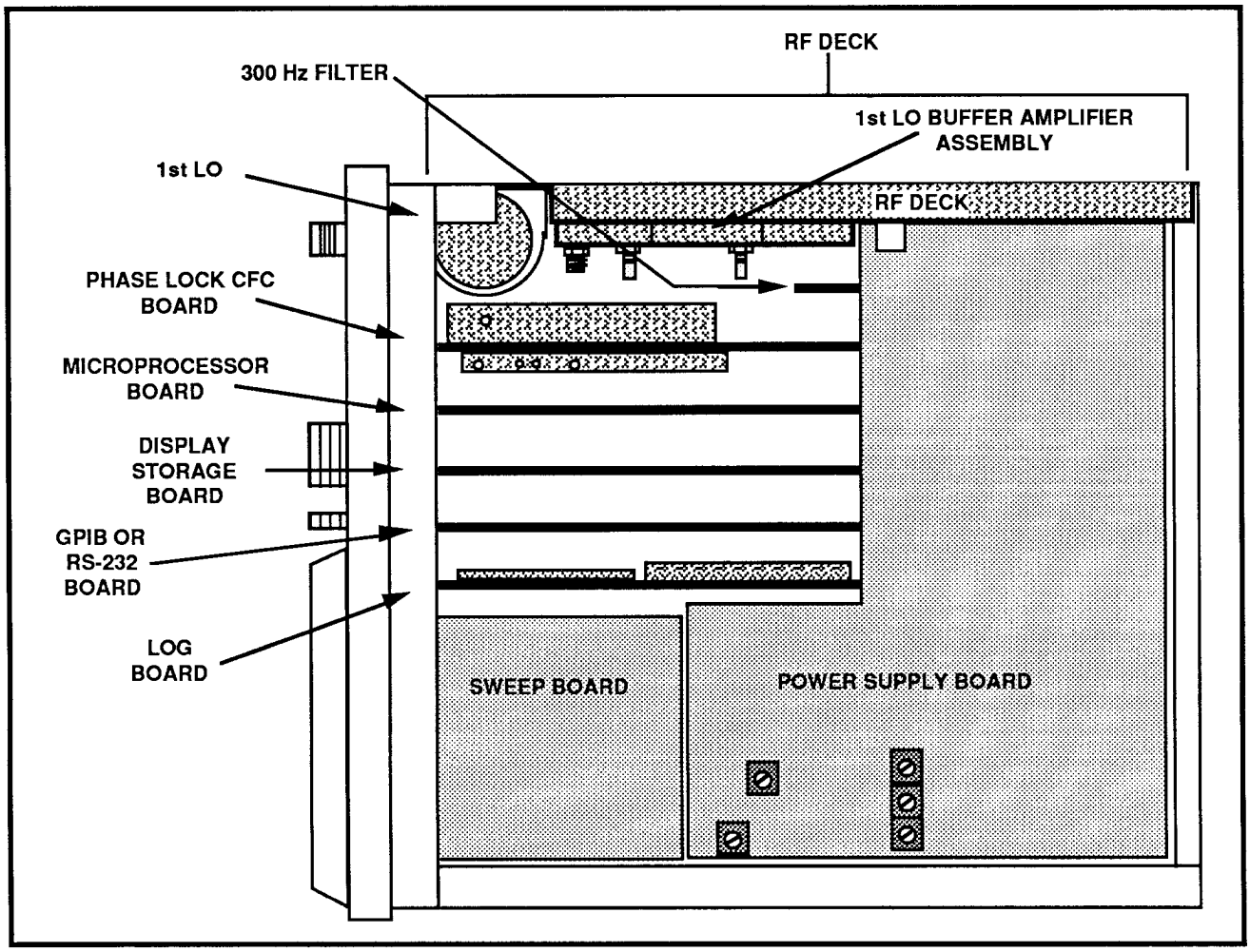

Figure 5-5. Assemblies seen from the bottom of the Spectrum Analyzer.

If the "start" (black) lead is broken and the lead is too short to resplice, attempt to fish out the broken end so one or two turns can be unwound, resplice and solder to the lead; then rewind and retape.

In all three instances, the CRT must be removed from the instrument.

Replacing Semirigid Coaxial Cables

Performance of the instrument is easily degraded if coaxial connectors are loose, dirty, or damaged. The following procedure will help ensure that the connection is good enough to maintain proper performance.

1. Use a 5/16-inch open-end wrench to loosen or tighten the connectors. It is good practice to use a second wrench to hold the rigid (receptacle) portion of the connector to prevent bending or twisting the cable.

2. Ensure that the plug and receptacle are clean and free of any foreign matter.

3. Insert the plug connector fully into the receptacle before screwing the nut on. Tighten the connection to 8 in-lb to ensure that the connection is tight. Do not overtighten (15 to 20 in-lb) because this can damage the connector.

Replacing the Front Panel Assembly

1. Remove the instrument from its cabinet (see Removing the Instrument from its Cabinet).

2. Remove the nut and washer from the RF INPUT connector (and from the Tracking Generator output connector if Option 04 is installed).

3. Remove four screws from the bottom front of the instrument as shown in Figure 5-6 to gain access to the two bottom retaining nuts.

4. Remove the bottom two front-panel retaining nuts (Figure 5-6).

5. Remove the top two front-panel retaining nuts (Figure 5-6).

6. Gently pull the front-panel assembly out of the instrument to gain access to a ribbon cable (P6) attached to the back of the front panel. Disconnect P6 from the Front Panel board.

7. Remove the Front Panel assembly.

Replace the Front Panel by reversing the removal procedure.

Replacing the RF Deck

1. Remove the instrument from its cabinet (see Removing the Instrument from its Cabinet).

2. Remove the Front Panel assembly (see Replacing the Front Panel assembly).

3. Remove the circuit board retainer.

4. Remove the Variable Resolution module.

5. Disconnect P510 and P550 (Figure 5-7) from the Phase Lock assembly.

6. Disconnect P100 and P200 (Figure 5-8) from the Attenuator assembly.

7. Disconnect P400, P410, P565, P670 (Figure 5-8) from the RF Mother board assembly.

8. Disconnect P430 and P460 (and P300 if Option 04 or Option 15 is installed) from the 1st LO Buffer Amp assembly (Figure 5-8).

9. Remove the seven screws and two nuts shown in Figure 5-9.

10. Loosen the two nuts shown in Figure 5-9.

11. With the instrument facing you, carefully raise the rear part of the deck and swing it to the left while pulling it backwards.

Replace the RF deck by reversing the removal procedure.

Replacing the 1st LO Assembly

1. Remove the instrument from its cabinet (see Removing the Instrument from its Cabinet).

2. Remove the RF Deck from the Spectrum Analyzer (see Replacing the RF Deck).

3. Disconnect P100 from the 1st LO Buffer Amplifier (semi-rigid cable from the 1st LO assembly to the 1st LO Buffer Amplifier).

4. Remove the 1st LO assembly from the RF deck.

Replace the 1st LO assembly by reversing the removal procedure.

Replacing the Step Attenuator

1. Remove the instrument from its cabinet (see Removing the Instrument from its Cabinet).

2. Disconnect P210 from the Step Attenuator. This is a multi-pin plug on the top side of the RF Deck.

3. Disconnect P100, P200, and P150 (Figure 5-8) from the Step Attenuator.

4. Remove the nuts and washers from J100, J150, J200, and J250 on the Step Attenuator.

5. Remove the Step Attenuator.

Replace the Step Attenuator by reversing the removal procedure.

Replacing the 1st LO Buffer Amplifier

1. Remove the instrument from its cabinet (see Removing the Instrument from its Cabinet).

2. Remove the RF Deck from the Spectrum Analyzer (see Replacing the RF Deck).

3. Disconnect P100 and P380 from the 1st LO Buffer Amp assembly.

4. Remove the Step Attenuator (see Replacing the Step Attenuator).

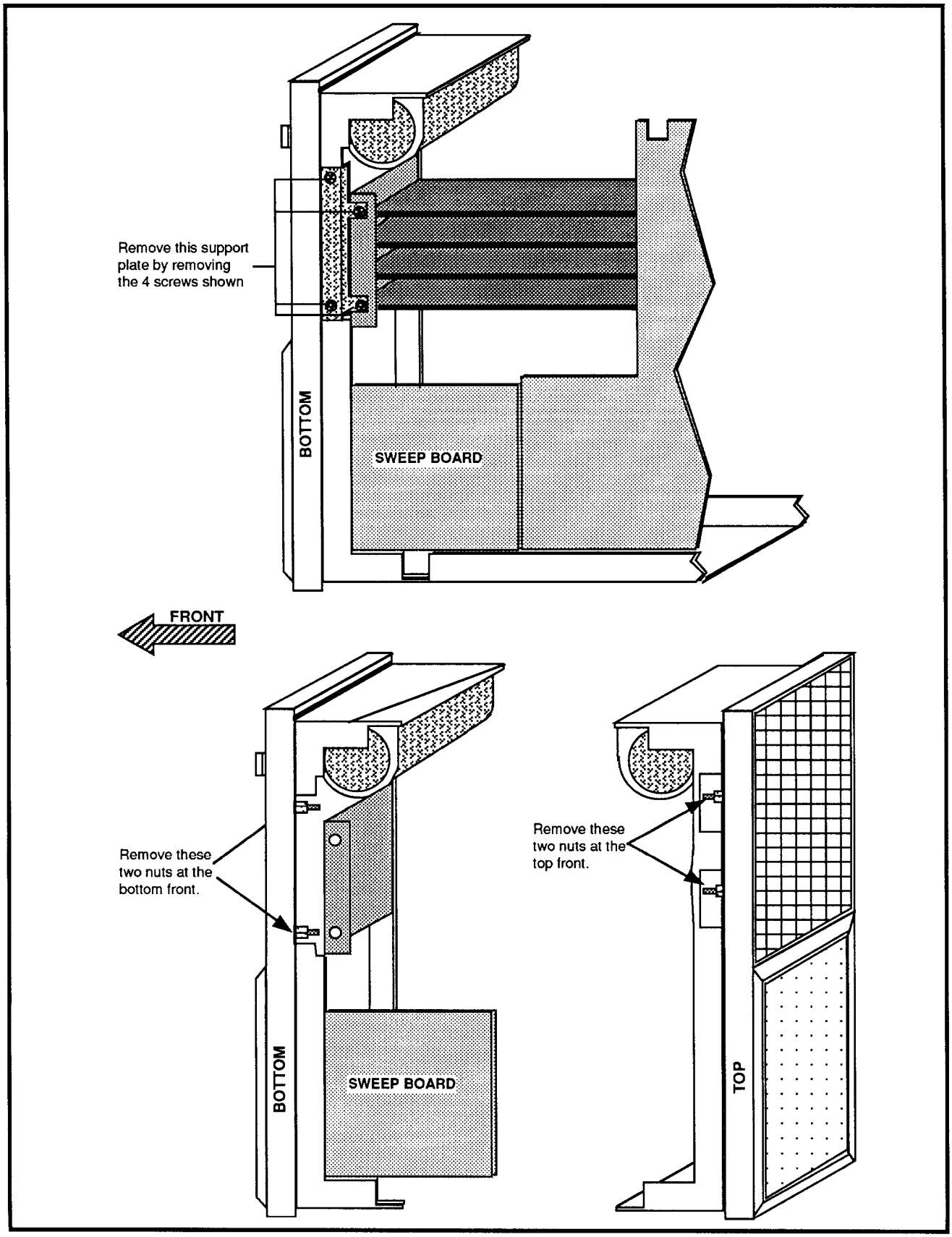

Figure 5-6. Removing the Front Panel.

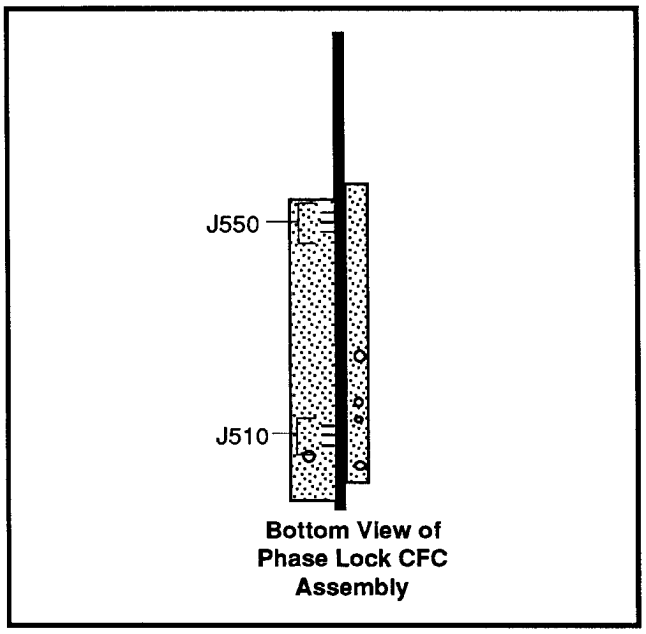

Figure 5-7. Locations of J510 and J550 on the Phase Lock assembly.

5. Remove two 1/4" nuts and a screw holding the 1st LO buffer Amplifier in place. The screw is located at one corner of the 1st Converter assembly.

6. Remove the 1st LO Buffer Amp assembly from the RF deck.

Replace the assembly by reversing the removal procedure.

Replacing the Fan Assembly

The fan comes as an assembly consisting of the fan, fan control unit, and connecting wires (two).

1. Remove the instrument from its cabinet (see Removing the Instrument from its Cabinet).

2. Remove the Variable Resolution module.

3. Unsolder the red and blue fan wires from the Power Supply board.

4. Remove the nut from the cable clamp over the red and blue fan wires at the inside of the rear panel.

5. Remove two screws at diagonally opposite ends of the fan and two screws at diagonally opposite ends of the fan control unit.

6. Remove the fan and its control unit.

Reinstall the fan by reversing the removal procedure.

Replacing the RF Mother Board

1. Remove the instrument from its cabinet.

2. Disconnect P100, P410, P400, P565, and P670 from the RF Mother board (Figure 5-8).

3. Remove the nut and washer from J100 on the RF Mother board.

4. Remove four screws from the four corners of the RF Mother board.

5. Remove the RF Mother board assembly.

Replace the assembly by reversing the removal procedure.

Replacing the Power Supply Assembly

1. Remove the instrument from its cabinet.

2. Remove the plug-in circuit board retainer.

3. Remove all the plug-in circuit boards.

4. Remove the Variable Resolution module.

5. Remove the connector from J480 on the Sweep board.

6. Disconnect P400 from the RF Mother board (Figure 5-8).

7. Remove the CRT (see Replacing the CRT).

8. Remove the connector from J6 on the Power Supply board.

9. Remove four screws at the corners of the rear sub-panel.

10. Remove two screws as shown in Figure 5-10.

11. Remove two nuts that fasten the rear plug-in circuit board guide to the RF Deck (Figure 5-11).

12. Remove two nuts that fasten the front plug-in circuit board guide to the rear plug-in circuit board guide.

13. Undo the cables threaded through the rear plug-in circuit board guide.

14. Remove the Power Supply assembly.

Replace the Power Supply assembly by reversing the removal procedure.

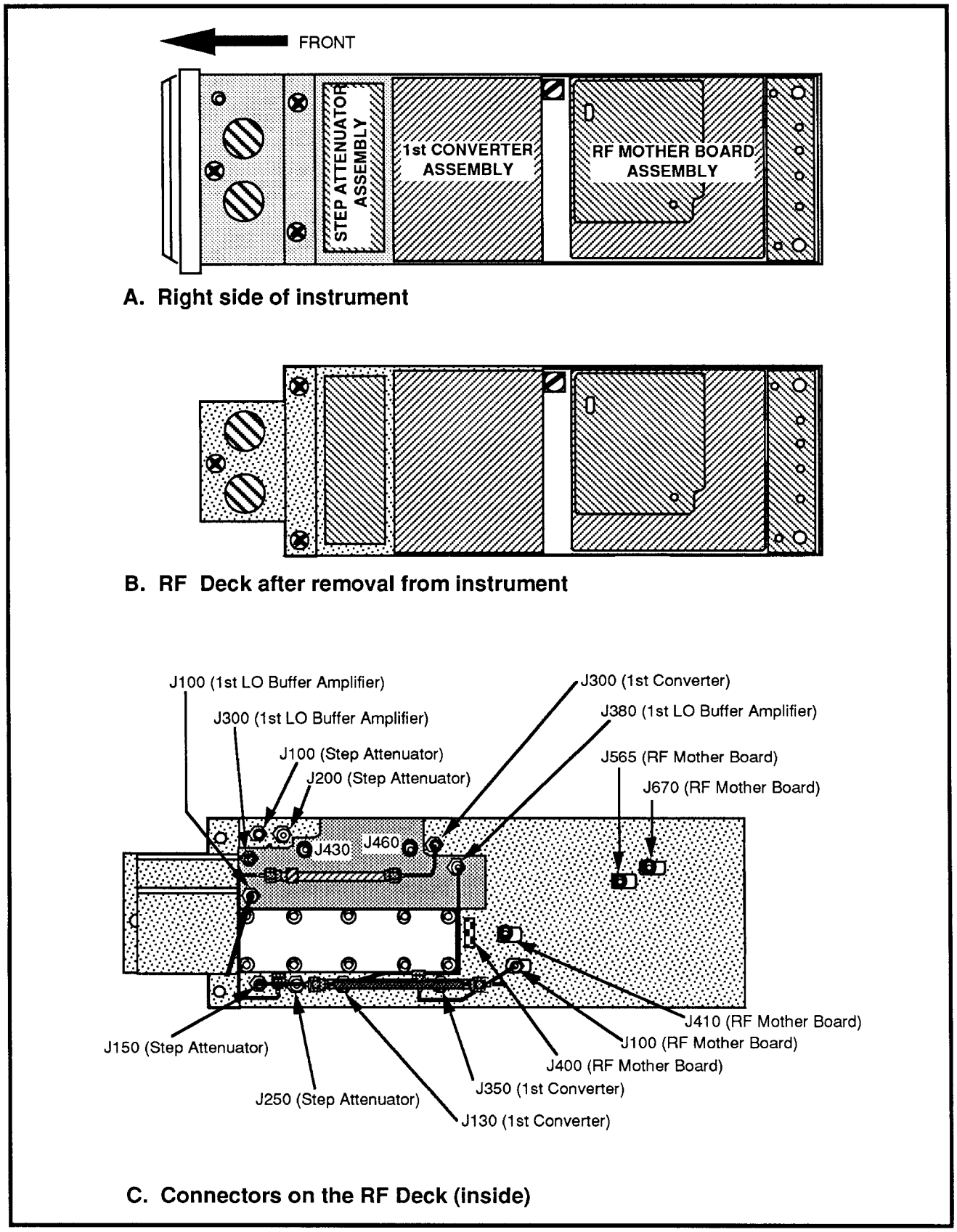

Figure 5-8. Connector locations on the RF Deck.

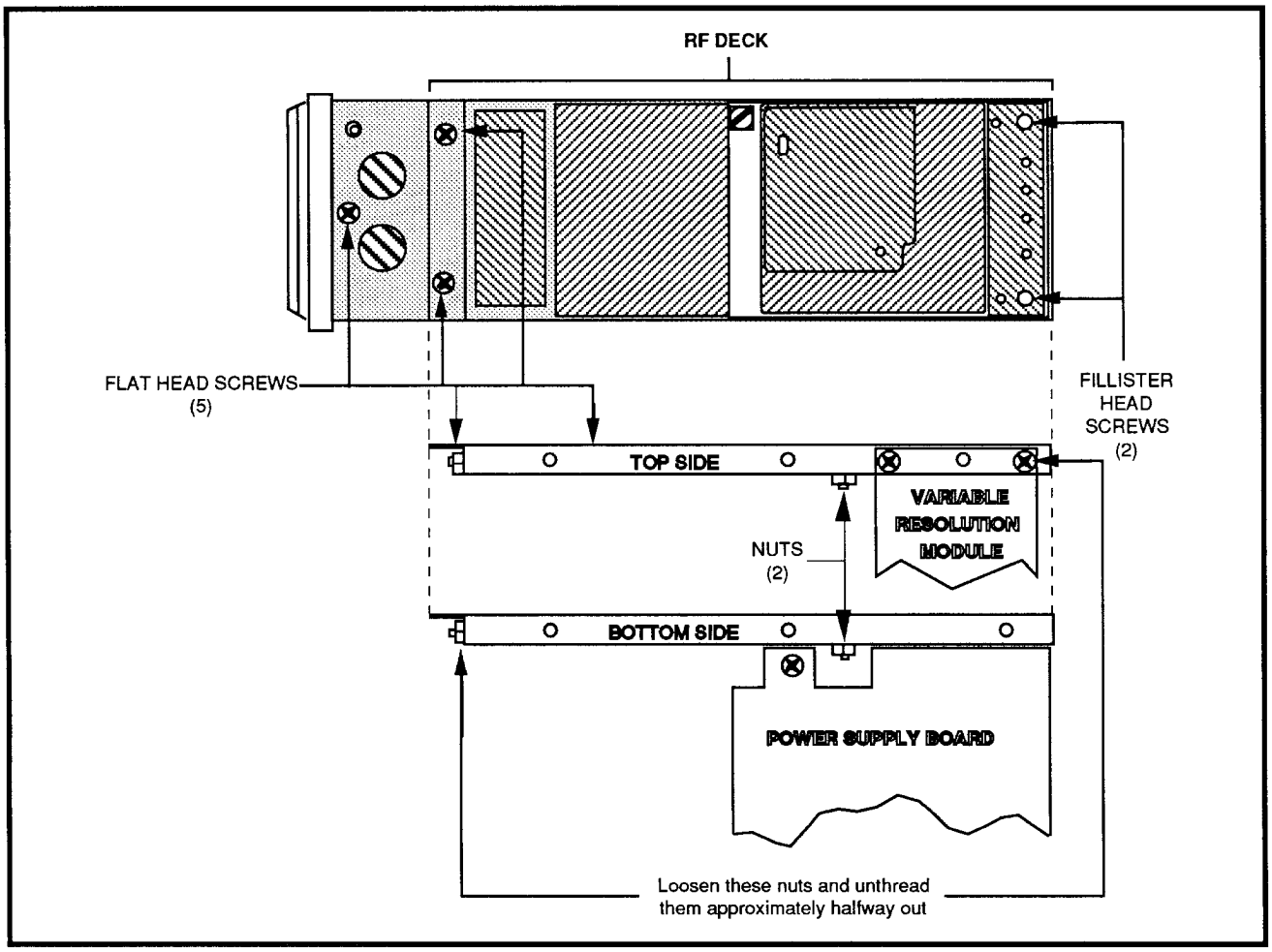

Figure 5-9. RF Deck screws and nuts.

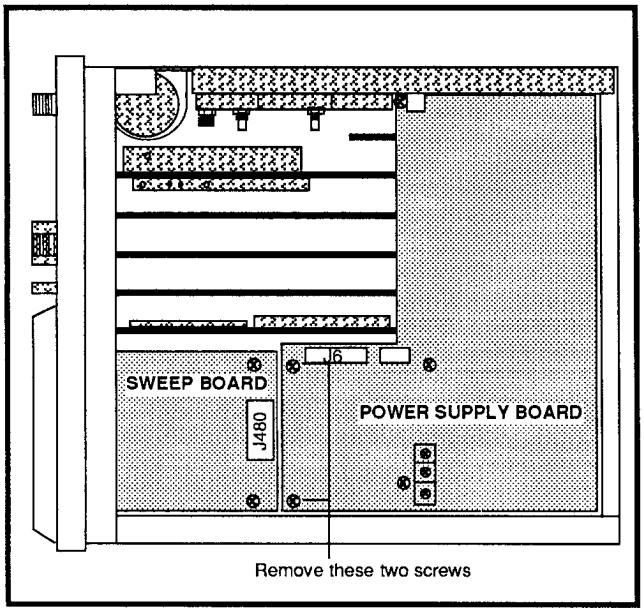

Figure 5-10. Power Supply assembly removal (bottom view).

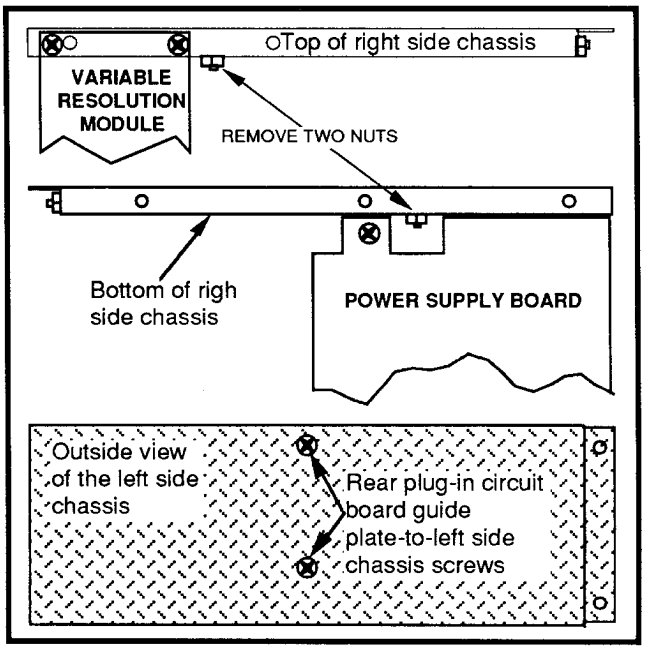

Figure 5-11. Removing Power Supply attaching nuts.

Replacing the Batteries (Display Storage and GPIB or RS-232 Boards)

Battery Disposal – The spectrum analyzer uses two lithium batteries for non-volatile memory. One battery is located on the Display Storage board, the other on the GPIB or RS-232 board (if installed).

WARNING

To avoid personal injury, observe proper procedures for handling of lithium batteries. Improper handling may cause fire, explosion, or severe burns. Do not recharge, crush, disassemble, heat the battery above 100 °C, incinerate, or expose the contents to water.

Large quantities of spent batteries may need to be sent by surface carrier to a hazardous waste disposal facility. Check with your local, state and Federal regulations.

MAINTENANCE ADJUSTMENTS

Adjusting the Four Cavity Filter (FL17)

The characteristics of the filter are checked with a network analyzer. Frequency of the filter is 2110 MHz, bandpass is approximately 20 MHz, 6 dB down, and insertion loss is approximately 1.5 dB.

Beat Note Level Adjustment

(Select R602 on the Phase Lock CFC board)

a. Remove the small shield over part of the Phase Lock CFC board.

b. Disable frequency corrections by pressing UTIL 4 3 5. Press any menu button to exit the menu, then enable continuous strobes by pressing UTIL 5 1 6 6.

c. Monitor J240 on the LFVCO assembly (Phase Lock module) with the test oscilloscope. Set the test oscilloscope deflection factor to 1 V/div and sweep rate to 20 µs/div.

d. Set the FREQ SPAN/DIV to 200 kHz. There should be a square wave present. Tune the FREQ/MARKERS control to get the lowest frequency possible. Reset the test oscilloscope time/div as needed.

e. Measure the beat note amplitude at the bottom of R602 (figure 5-12) on the Phase Lock CFC board.

NOTE

If the beat note frequency is above 50 kHz it will not be visible.

f. If the amplitude is greater than 60 mV, pick a lower value for R602. If the amplitude is lower than 40 mV, pick a higher value. See Figure 5-12 for the location of R602. The following formula helps in picking a resistor value:

$$R602 = 5620 \frac{60\ \text{mV}}{\text{Vp-p}}\ \Omega$$

g. Replace the shield on the Phase Lock CFC board.

h. Enable frequency normalizations by pressing UTIL 3 1.

i. After frequency normalizations are complete, set the FREQUENCY to 100 MHz and enable the calibrator signal (INPUT 9). There should be a 100 MHz signal at center screen.

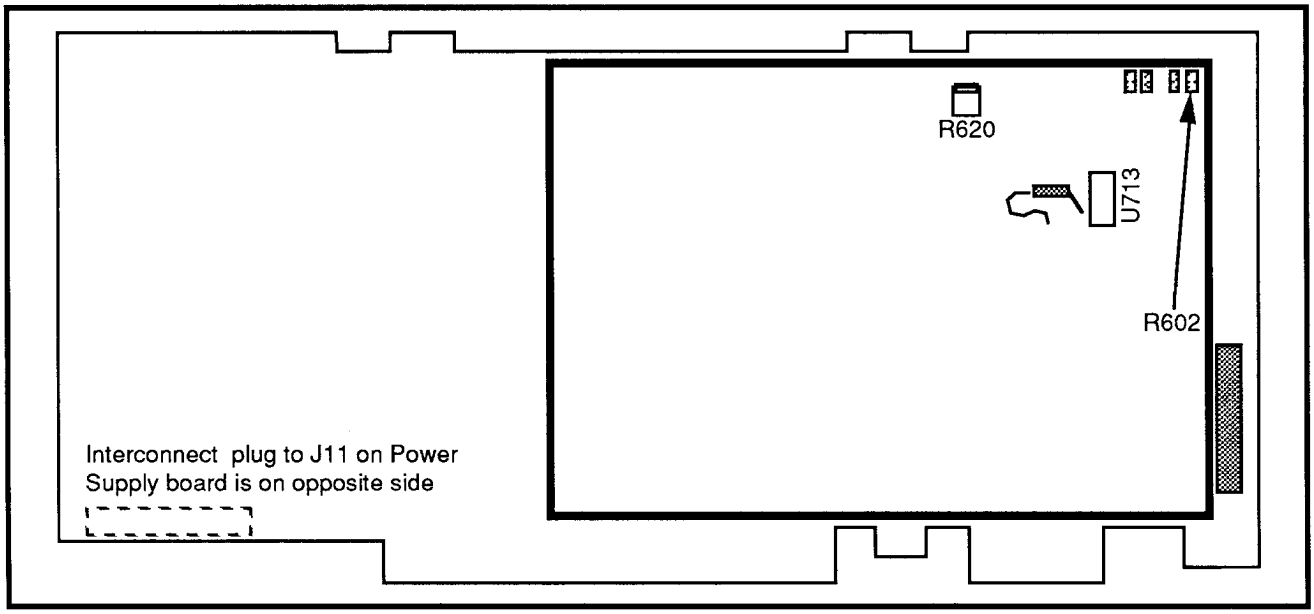

Figure 5–12. Location of R602 on the Phase Lock CFC board.

OPTIONS

INTRODUCTION

This section describes the options available for the spectrum analyzer. All options are installed at the factory.

OPTIONS A1 THROUGH A5
(Power Cord Options)

There are five international power cord options offered for the Spectrum Analyzer. The physical descriptions of the cord plugs are listed in Table 6-1. For replacement purposes, refer to the Replaceable Mechanical Parts list.

Table 6-1
POWER CORD OPTIONS

Option A1	Universal Euro, 220 V/50 Hz at 16 A
Option A2	United Kingdom, 240 V/50 Hz at 13 A
Option A3	Australian, 240 V/50 Hz at 10 A
Option A4	North American, 240 V/60 Hz at 12 A
Option A5	Swiss, 220 V/50 Hz at 6 A

OPTIONS B1 AND B2

Option B1 adds a Service manual for the spectrum analyzer.

Option B2 adds a Pocket Reference, a User manual, a Programmer manual, and a Service manual for the spectrum analyzer.

OPTIONS M1 THROUGH M3
(Extended Service and Warranty Options)

There are three extended service and warranty options offered for the spectrum analyzer that go beyond the basic one-year coverage (see Table 6-2). Contact your local Tektronix Field Office or representative for additional information about your specific requirements.

Table 6-2
EXTENDED SERVICE AND WARRANTY OPTIONS

Option	Description
M1	Two routine calibrations to published specifications; one each in years two and three of warranty coverage, plus two years remedial service.
M2	Four years remedial service
M3	Four routine calibrations to published specifications; one each in years two, three, four, and five of product ownership, plus four years of remedial service.

OPTION 02

Option 02 adds a frequency counter with readout resolution selectible between 1 Hz and 1 kHz. A provision for turning off the counter has been provided when tracking is invoked. (Option 02 is standard on the 2712.)

OPTION 03

Option 03 adds the IEEE Standard 488 General Purpose Interface Bus (GPIB). (Option 03 is standard on the 2712.) The pertinent circuits are located on the Digital Option board. The GPIB port consists of mainly three components. They are the general purpose interface bus controller, an octal bus transceiver, and an eight-channel transceiver. In addition, there is circuitry included to drive two LEDs to display the status of the Not Ready For Data (NRFD) and Not Data Accepted (NDAC) handshake lines.

The general purpose interface bus controller, octal bus transceiver, and eight-channel transceiver meet the IEEE-488 1975/78 standards along with the IEEE-488A 1980 supplement.

For programming, see the 2711 and 2712 Programmer Manual.

The rear-panel connection provides full GPIB printer compatibility.

OPTION 04

Option 04 adds a Tracking Generator that generates a swept frequency that tracks the frequency window of the spectrum analyzer. The Tracking Generator has the following features:

- A microprocessor-controlled frequency adjustment for correlating the generator frequency with the Spectrum Analyzer's window.
- Optimum flatness
- Microprocessor-controlled output levels
- Excellent harmonic and spur performance
- 50 Ω nominal output impedance

Accessories

- Adapter 50 Ω N Male to BNC Female
- 75 Ω-to-50 Ω Minimum Loss Attenuator, N Male to BNC Female

OPTION 07

Option 07 comprises the Tektronix 2704 DC Inverter and 2705 Battery Pack. The Inverter and Battery Pack are designed to allow operation of the spectrum analyzer in locations where AC power is not available.

The Inverter and Battery Pack combination is capable of operating the spectrum analyzer for a minimum of one hour. Moreover, the Inverter contains a charger and an 18 VDC output to power external devices such as Low Noise Block (LNB) Down Converters used in satellite downlink applications. The Inverter also includes an additional 12 V input to allow use of external batteries without power interruption to the spectrum analyzer. The Inverter and Battery Pack form a matching unit and attach together to the spectrum analyzer. At least one Battery Pack is needed with each Inverter for normal operation and to add stability when mounting to the spectrum analyzer.

Refer to the 2704 DC-TO-AC INVERTER AND 2705 BATTERY PACK manual for specifications, installation instructions, and other pertinent information.

OPTION 08

Option 08 adds the RS-232 Interface port. The pertinent circuits are located on the RS-232 board. The RS-232 board replaces the GPIB board in the 2712 spectrum analyzer.

OPTION 10

Option 10 adds Video Monitor capabilities. The pertinent circuits are located on the Sweep board.

OPTION 12
(2712 only)

Option 12 adds a quasi-peak detector and EMC filters used in EMI prequalification tests. The board consists of a high-performance amplifier and five selectable bandpass filters. The filters are 1 MHz, 120 kHz, 9 kHz, 1 kHz, and 200 Hz. The 200 Hz filter replaces the 300 Hz filter when Option 12 is installed. Refer to Option 12 Characteristics in Table 2-7 in Section 2 of this manual for bandwidth values.

OPTION 14
(2712 ONLY)

Option 14 provides the resolution bandwidths used as "fill in" resolution bandwidth filters to enhance the measurement capability of the overall instrument. The board consists of a high-performance amplifier and four selectable bandpass filters. The filters are 1 MHz, 100 kHz, 10 kHz, and 1 kHz.

OPTION 15

Option 15 provides an interface for a 1405 TV Sideband Analyzer. The 1st LO is routed from J300 on the 1st LO Buffer Amplifier assembly to J101 at the rear panel and terminated in 50 Ω. See Figure 6-1.

If Option 04 is installed, the 1st LO is routed from J110 on the TG Isolation Amps board in the Tracking Generator rather than from the 1st LO Buffer Amplifier assembly.

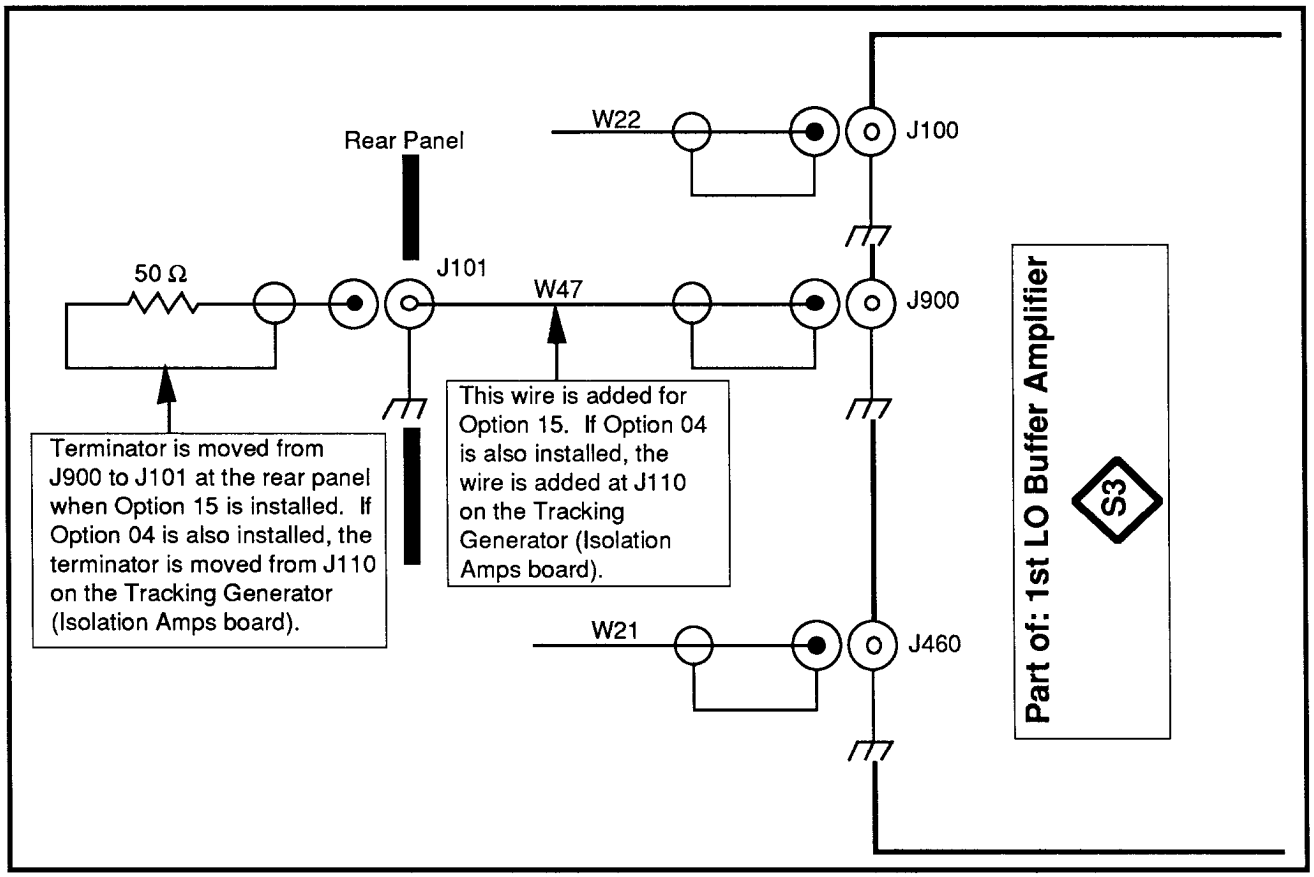

Figure 6-1. Option 15 installation.

OPTION 20
(2712 only)

Option 20 provides a set of antennas for making EMC tests to 1 GHz. The antenna set includes the following:

- Biconical antenna that covers the 20 MHz-to-300 MHz frequency range
- Log Periodic antenna that covers the 200 MHz-to-1 GHz frequency range
- Non-metallic tripod
- One RG-214 cable with male-N connectors

OPTION 30

Option 30 enables mounting of the spectrum analyzer in a standard 19-inch (48.3 cm) rack. The spectrum analyzer is guaranteed to meet all electrical and environmental characteristics, published in both the User and Service manuals, when it is mounted according to the procedures given in the instruction sheet.

OPTION 33

Option 33 provides a Travel Line package including a rain cover, accessory pouch, gray CRT filter, and carrying strap.

OPTION 34

Option 34 provides a rackmount adapter that enables mounting of the spectrum analyzer in a standard 19-inch (48.3 cm) rack. The adapter consists of a 19"-by-6.970" cradle (shelf) with slide-out assemblies and a mask to fit over the regular instrument panel.

THEORY OF OPERATION

BLOCK DIAGRAM DESCRIPTION

The spectrum analyzer block diagram can be broken into the following major blocks:

- Attenuator and Low-Pass Filter
- 1st Converter
- 2nd Converter
- RF Mother Board (3rd Converter)
- VR (Variable Resolution Module)
- Log Amplifier
- Display Storage Board
- Center Frequency Control
- 1st LO Buffer
- Microprocessor
- Sweep
- Power Supply (Deflection)

This is a block diagram description of the spectrum analyzer. While reading this description, refer to Figure 7–1.

NOTE

The power levels noted in the block diagram between the input and the Log Amplifier assume a –30 dBm input level.

The Block Diagram shows how the major sections in the instrument relate and the paths of most major signals. Not explicitly shown are the interconnections between the Power Supply and the circuit blocks, interconnections between the Sweep board and other major circuit blocks, and interconnections between the Deflection System and other circuit blocks. (The Deflection System is located on the Power Supply board.)

RF-type signal connections between modules are made using double-shielded coaxial cables, while DC-type signal connections are made using either multi-pin jacks on the Power Supply board (Power Supply, Log Amplifier, Display Storage, Microprocessor, and Center Frequency Control boards) or small ribbon cables.

The main Interconnect Diagram at the front of the Diagrams section provides a chart of the interconnect system in addition to what is shown in Figure 7–1. Block diagrams showing more detail of these main sections appear before the appropriate schematics together with another description. Circuit schematic diagrams follow the main interconnect diagram.

What It Does

The spectrum analyzer accepts an electrical signal as its input and displays the signal's frequency components on a CRT. Signals are applied directly to the RF INPUT.

The display of the input signal appears on the CRT as a graph where the horizontal axis is frequency and the vertical axis is amplitude.

How It Works

The spectrum analyzer operates as a variable bandwidth receiver. The CRT beam moves horizontally as a range of frequencies is spanned. When a frequency component of an input signal is detected, the beam is deflected vertically as a function of input power at that frequency.

ATTENUATOR AND LOW-PASS FILTER

There are two selections for inputs to the spectrum analyzer: the RF INPUT at the front panel and the internal calibrator signal.

The Attenuator adds attenuation to the input signal such that the level at the input of the 1st mixer (1st Converter) is limited to no more than –30 dBm. This would represent a full-screen signal. Also, an amplifier can be inserted in the signal path to improve sensitivity when small signals are applied to the RF INPUT by invoking the PREAMP mode. The Microprocessor sets the amount of attenuation, depending on the user-selected reference level, to maintain the proper signal level.

The signal is then routed to the 1st Converter through a Low-Pass Filter. The Low-Pass Filter attenuates out-of-band signals and helps minimize 1st Local Oscillator (LO) emission at the RF INPUT. When the PREAMP mode is invoked, the Microprocessor sets the appropriate amount of attenuation, or it sets the gain of an internal amplifier (Variable Resolution) to maintain a calibrated display.

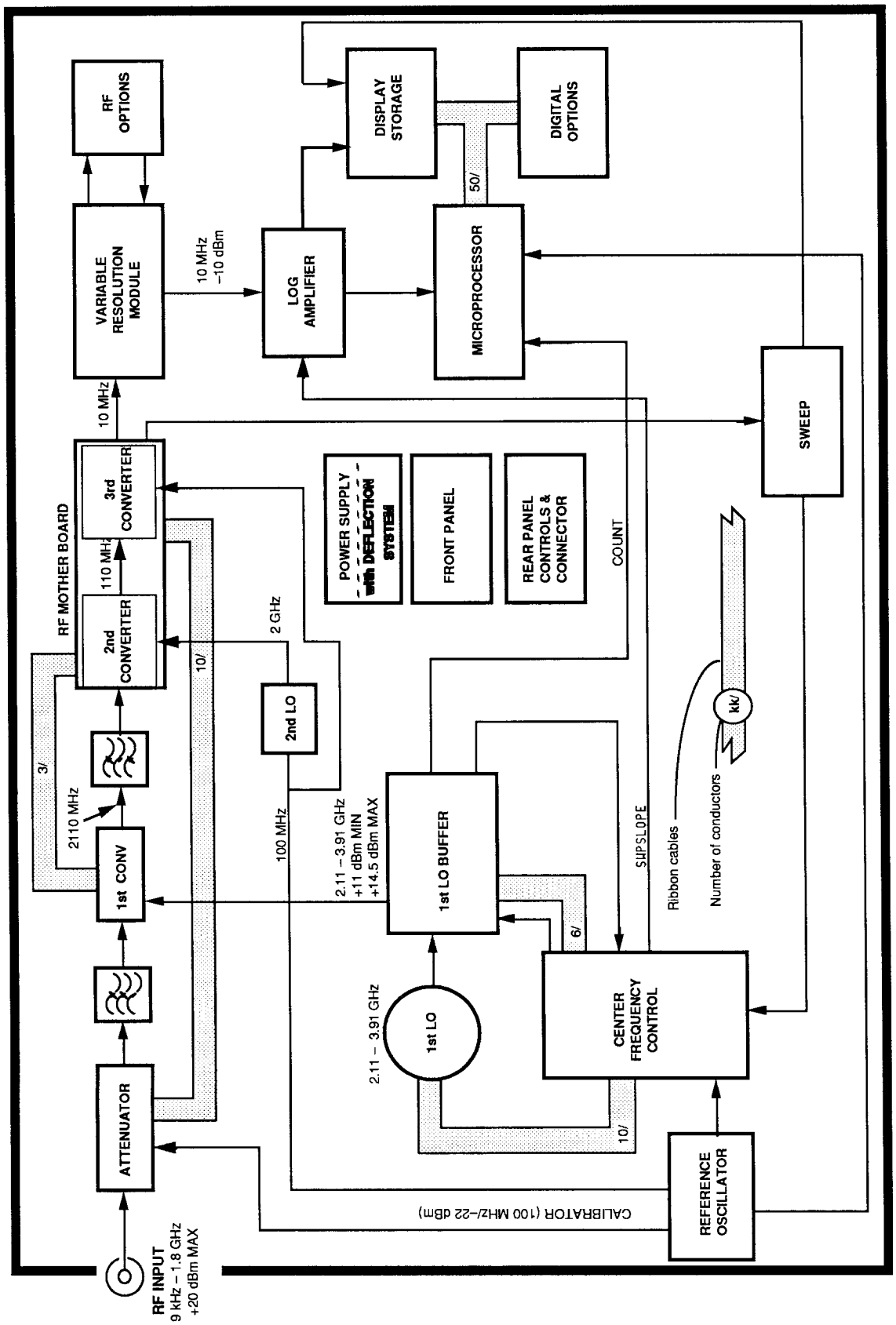

Figure 7–1. Main block diagram.

1ST CONVERTER AND BANDPASS-FILTER

The input signal is converted to an intermediate frequency (IF) signal of 2110 MHz. This is accomplished by mixing the input signal with a LO signal that varies over a range of 2.11 GHz to 3.91 GHz. The LO range corresponds to a range of 0 Hz to 1.8 GHz at the RF INPUT. The output of the mixer is then amplified to compensate for the conversion loss, and it is filtered to allow only the difference frequency to pass. All other mixer products are attenuated.

2ND CONVERTER

The 2nd Converter down-converts the 2110 MHz IF signal to 110 MHz, then routes this 2nd IF to the RF Mother board.

RF MOTHER BOARD ASSEMBLY

The RF Mother board assembly contains a 2 GHz 2nd LO, a 2nd Converter, several gain stages, a 5 MHz resolution bandwidth filter, and a 3rd Converter. The 2nd Converter down-converts the 2110 MHz 1st IF to 110 MHz, and the 3rd Converter down-converts the 110 MHz 2nd IF to 10 MHz 3rd IF and routes this 3rd IF to the Variable Resolution module.

VARIABLE RESOLUTION MODULE

The Variable Resolution contains several selectable gain stages prior to the filters and a compensation amplifier. One of the four filters or an external filter may be selected. Each filter has a pad associated with it that compensates for losses in the filter. The system selects the appropriate amplifier for each filter selected.

The 10 MHz IF signal is processed through one of several band-pass filters, amplified once more, and then routed to the Log Amplifier board.

LOG AMPLIFIER

The Log Amplifier performs the logarithmic conversion, linear detection and logarithmic detection of the incoming signal, and amplitude calibration. The log display has scale factors of 10 dB/div, 5 dB/div, and 1 dB/div. The module also contains an FM detector, an audio amplifier, an amplitude-limited output for the period counter, and an out-of-band signal clamp.

The FM detector produces a voltage that corresponds to the input signal strength in decibels. The detector output is then vertically scaled and sent to the Display Storage and Sweep boards.

The control of the log by the control processor is through three 8-bit shift registers.

DISPLAY STORAGE

The Display Storage board contains the circuitry for putting text and waveforms onto the CRT display.

This board contains the following programmable functions:

- Waveform Storage— four 512 point waveforms
- Dot Markers — up to two intensified markers
- Text Storage — four 32 character by 16 lines of text
- Accumulator data — direct access to the output of the A-to-D converter.
- Non-Volatile memory — 32 k total; 2 k is used for waveforms; 2 k used for text; the rest is available for general use.

When enabling the analog display, the waveforms A, B, C, and D are turned on, but not displayed. This results in a chopped-blanking effect between the readout and the analog display. The scanning alternates between the readout and the analog display.

The Display Storage board is capable of storing four waveforms of 512 bytes each, four pages of text of 512 bytes each, and up to two markers. Any combination of waveforms and text may be displayed on the CRT. If any waveforms are being displayed, the text portion of the display is limited to approximately 100 characters in order to avoid flicker.

Only one page of text may be displayed at any one time. The readout page is limited to approximately 100 characters.

The waveforms and text displays are accessed through memory reads and writes. When (DISPLAY) A, B, C, or D is selected, the stored waveforms in those registers are displayed. When A, B, C, and D are deselected, the display reverts to the real time (non-digitized) video waveform, and the readout is updated during the readout cycle.

CENTER FREQUENCY CONTROL

The Center Frequency Control system provides 1st Local Oscillator (1st LO) signal to the 1st Converter at the center frequency and span demanded by the user. In general, this

is accomplished by a combination of setting, counting, and resetting (as required) of the frequencies of various oscillators.

The system is expected to control the frequency within a few Hz out of a total operating range of approximately 2 GHz.

The principal elements of the frequency control system are:

1st LO

This is a YIG-tuned oscillator that covers the range of 2.11 through 3.91 GHz. (YIG = Yttrium Iron Garnet.) Ideally, its operating frequency is exactly proportional to the strength of an internal DC magnetic field (combined field of two coils, one large (Main) coil, and a small (FM) coil. In practice, the frequency is uncertain by up to a few MHz due to problems such as temperature drift, slight nonlinearity, and magnetic hysteresis. Also, the oscillator has some residual FM and phase noise sidebands due both to internal causes and to external noise and drift from the driver circuit. The remainder of the frequency control system maintains the oscillator (abbreviated YIG) at the right frequency. Usually, it is sufficient to set the YIG, then periodically check its frequency and make small adjustments as required. However, in very narrow spans the YIG must be phase locked to a stable source in order to maintain sufficient stability.

The 1st LO Interface provides drive signals for the main coil and FM coil, a control signal for the main coil, and power for the gain stage.

100 MHz Reference Oscillator

This is a precision, temperature-controlled, quartz crystal oscillator that provides the reference around which all instrument frequency-related performance revolves. It is designed for maximal frequency stability over temperature and time, with absolute frequency accuracy being secondary. The instrument firmware accounts for any frequency inaccuracy, producing virtually a perfect reference.

Phase Gate

The phase gate is a high-speed sampling switch that takes a very brief sample of the 1st LO waveform once during each cycle of the strobe frequency. (The strobe is a control signal supplied to the phase gate from an external source.) These samples are later averaged by a low-pass filter to eliminate ripple at the strobe frequency and also to eliminate some other undesirable components.

When the 1st LO is phase locked to any integer multiple of the strobe frequency, the resulting output is a phase-dependent DC voltage that is used as the error voltage in a feedback loop to maintain phase lock.

When the 1st LO is not phase-locked, the resulting output is a beat note occurring at the difference frequency between the 1st LO frequency and the nearest integer multiple of the strobe frequency. (Actually, many beat frequencies are present at once, but the low-pass filter eliminates all but the one of lowest frequency.)

Phase Lock Center Frequency Control (PLCFC) Module

This element is the focal point of the frequency control system hardware. It accepts commands from the instrument microprocessor and then puts out appropriate drive signals to the 1st LO as well as a suitable strobe signal to the Phase Gate. The PLCFC module also uses the Phase Gate output. It also provides counter signals and status information to the microprocessor. It requires the 100 MHz reference signal in order to function.

Firmware

Because of the variety of tasks that the spectrum analyzer is called upon to do, it is essential to have an intelligent controller. This is especially true in the frequency control context, because the required degree of control could not be economically obtained with unassisted analog hardware.

Instrument firmware has the task (among many others) of commanding the frequency control hardware, taking feedback from it, and making readjustments as required to obtain the desired result.

The interface between the microprocessor system and the PLCFC module is through a pair of serial data lines, some latch lines, and some clock signals.

1st LO BUFFER

The 1st LO Buffer consists of a Leveled Amplifier and a Phase Gate Detector.

The Leveled Amplifier provides the LO input drive for the 1st Mixer.

The Phase Gate Detector logs 1st LO drift. That information is then used for frequency corrections.

SWEEP

The Sweep board contains a microprocessor interface, horizontal sweep generator, trigger circuitry, vertical sweep (raster scan) circuitry, video processing, video line triggering, and graticule illumination.

This board receives messages from the microprocessor regarding its operation, but cannot send messages directly to the microprocessor.

Various combinations of resistors and capacitors yield the sweep speed selections.

The available trigger modes are Free Run, Internal, Line, External, TV Field, and TV Line. When the video monitor mode is selected (Option 10 installed), the readout, display storage, and video filter are turned off; the resolution bandwidth is set to 5 MHz; the Vertical display mode defaults to Lin; the span setting defaults to Zero Span; and the sweep rate defaults to 5 µs. The video monitor mode can be aborted by using the trigger menu or by selecting another trigger mode.

When Option 10 is intalled, the TV Line Trigger mode causes the spectrum analyzer to trigger on the selected video line and display that line and part of the next line.

DISPLAY SYSTEM

The Display System consists of the Vertical Display circuit, Horizontal Display circuit, and Z-Axis circuit. See Figure 7–2.

The Display System has three possible display modes: active spectrum display mode, where the spectrum of the incoming signal is displayed; static spectrum display mode, where the stored signals are displayed; and video monitor mode, where live video signals are displayed.

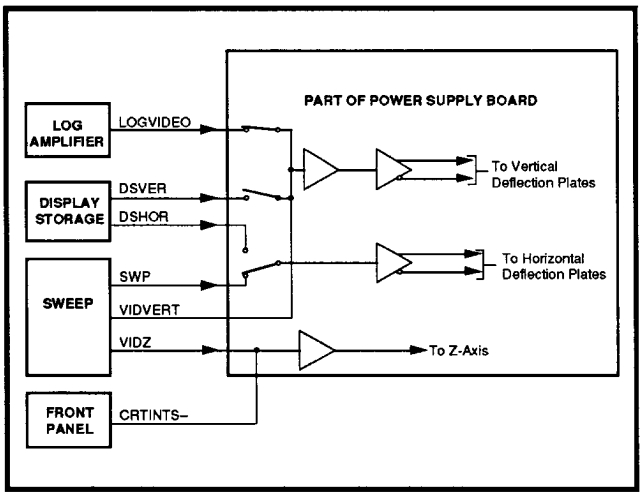

Figure 7-2. Display system.

CIRCUIT DESCRIPTION

ATTENUATOR AND 1ST CONVERTER S1

The Attenuator and 1st Converter signal path consists of:

- Step Attenuator
- Low-Pass Filter
- Mixer
- Low-Pass Filter
- Band-Pass Filter

Step Attenuator

The spectrum analyzer input frequency range is 9 kHz to 1.8 GHz. The low end of the frequency range is determined by a capacitor on the Attenuator board, the narrowest resolution filter in the Variable Resolution assembly, and FM characteristics of the 1st LO (YIG Oscillator).

The signal comes in at the front-panel RF INPUT connector. The RF INPUT connector is connected to a 0-to-50 dB step attenuator, capable of stepping from 0 to 50 dB in 2 dB steps. The Attenuator consists of relay-controlled pads of 2, 4, 8, 16, and 20 dB. The relays are controlled by the instrument firmware to provide the necessary attenuation to maintain a calibrated reference level.

A relay switch at the input of the Step Attenuator selects the RF input signal or the internal calibrator signal. See Figure 7-3. Since the calibrator signal comes into the Step Attenuator assembly ahead of the attenuators, it can be used to verify the accuracy of the Step Attenuator and other parameters. Selection is made through the INPUT MENU.

Also, an amplifier with 18 to 20 dB of gain may be inserted in the signal path at the output of the Step Attenuator. This is the PREAMP mode, selectable through the INPUT MENU. It is

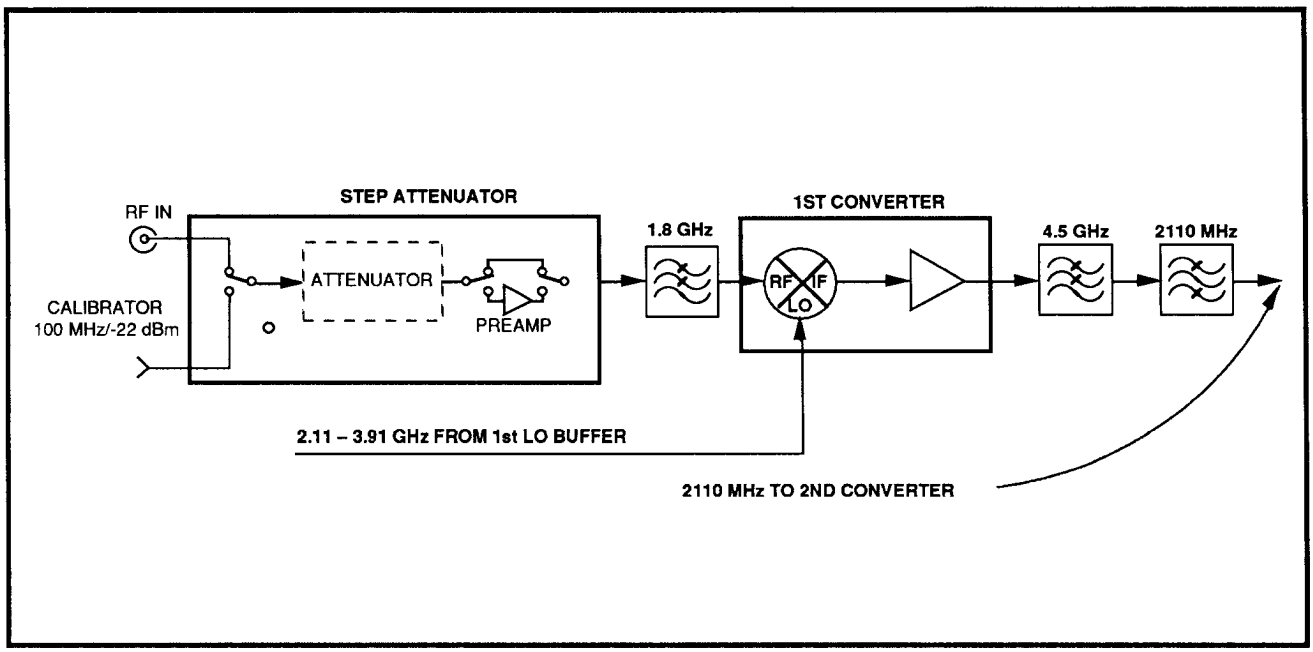

Figure 7-3 Attenuator and 1st Converter

used to enhance sensitivity, when small signals are applied to the input, by maintaining the same signal-to-noise ratio from the input to the 2nd Converter. When a small signal is applied to the RF INPUT, and the PREAMP mode is activated, both the signal and the noise level are amplified an equal amount. Any attenuation less than the gain of the preamp will then attenuate both the signal and the noise. Thus, signal-to-noise ratio remains nearly constant. In the meantime, the instrument makes corrections in the IF to maintain a calibrated reference level.

Low-Pass Filter

The Low-Pass Filter attenuates all out-of-band frequencies; also, it tends to reject all frequencies above 1.8 GHz, preventing them from reaching the mixer input and creating unwanted images. It reduces emissions from internally-generated frequencies above 1.8 GHz.

1st Converter

The 1st Converter converts the incoming RF signals to the 1st IF. Input signals are applied through the Step Attenuator and Low-Pass Filter and through the 1st LO Buffer Amplifier.

The 1st Converter receives the RF signal through the Low-Pass Filter and a 1st LO signal from the 1st LO Buffer Amplifier. These signals combine to produce mixing products that are filtered to yield the 2110 MHz IF signal.

The mixer output is coupled to the input of a balanced amplifier where the signal is split into two paths. The signals in the two paths are 90 degrees out of phase. The signals are recombined at the output, yielding a gain of approximately 10 dB. Any reflections to the input are dissipated in a 50 Ω termination. The output is also terminated in 50 Ω to assure a match at the output port.

Band-Pass Filter

The Band-Pass Filter (a four-cavity filter) is a low-loss narrow-band filter that only passes the 2110 MHz IF signal to the 2nd Converter. Any other frequencies are reflected back to the 1st Converter and dissipated in the termination. In addition, the filter prevents the 2nd Converter LO and mixer products from feeding back into the 1st Converter.

Each end resonator is capacitively coupled to external circuits through a coupling hat plugged into a 3 mm connector. Inter-cavity coupling is provided by coupling loops that protrude from the machined filter top. The resonant frequency of each cavity is determined primarily by the depth of a gap in the underside of the filter top and is fine-tuned with a tuning screw on the side of each cavity. When properly tuned, the filter return loss is >25 dB from either end (in a 50 Ω system). Figure 7-4 shows the equivalent electrical circuit, and Figure 7-5 shows a cross sectional view of the filter.

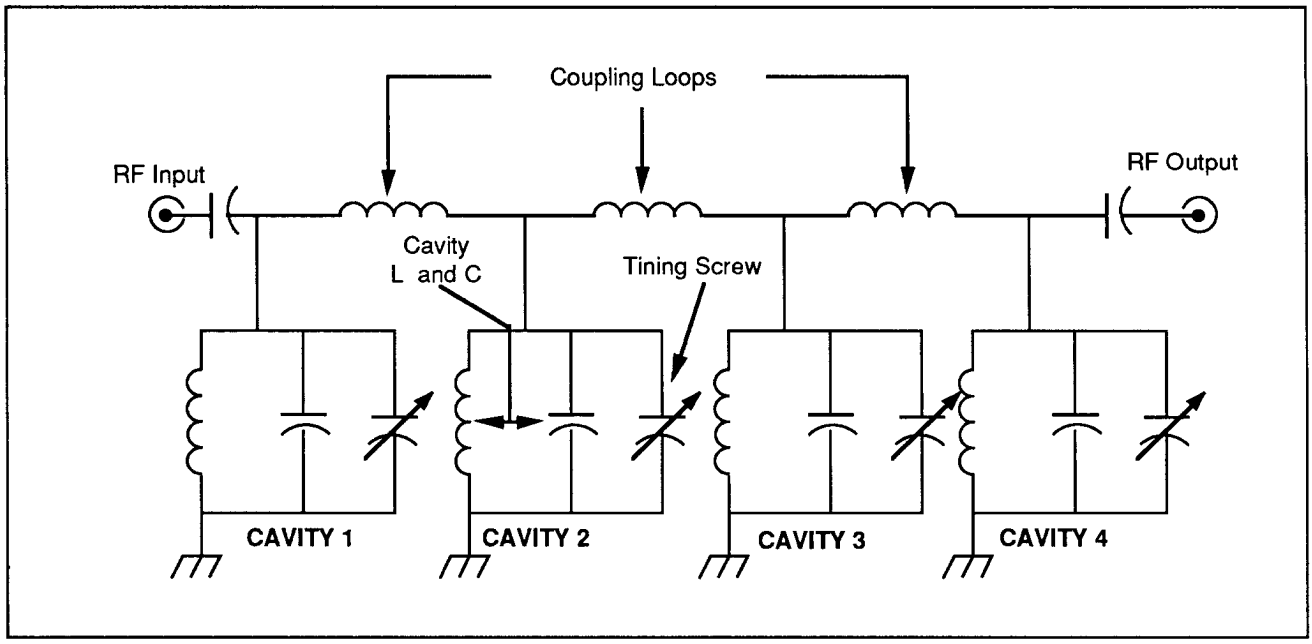

Figure 7-4 Equivalent circuit for the Band-Pass (4-cavity) Filter.

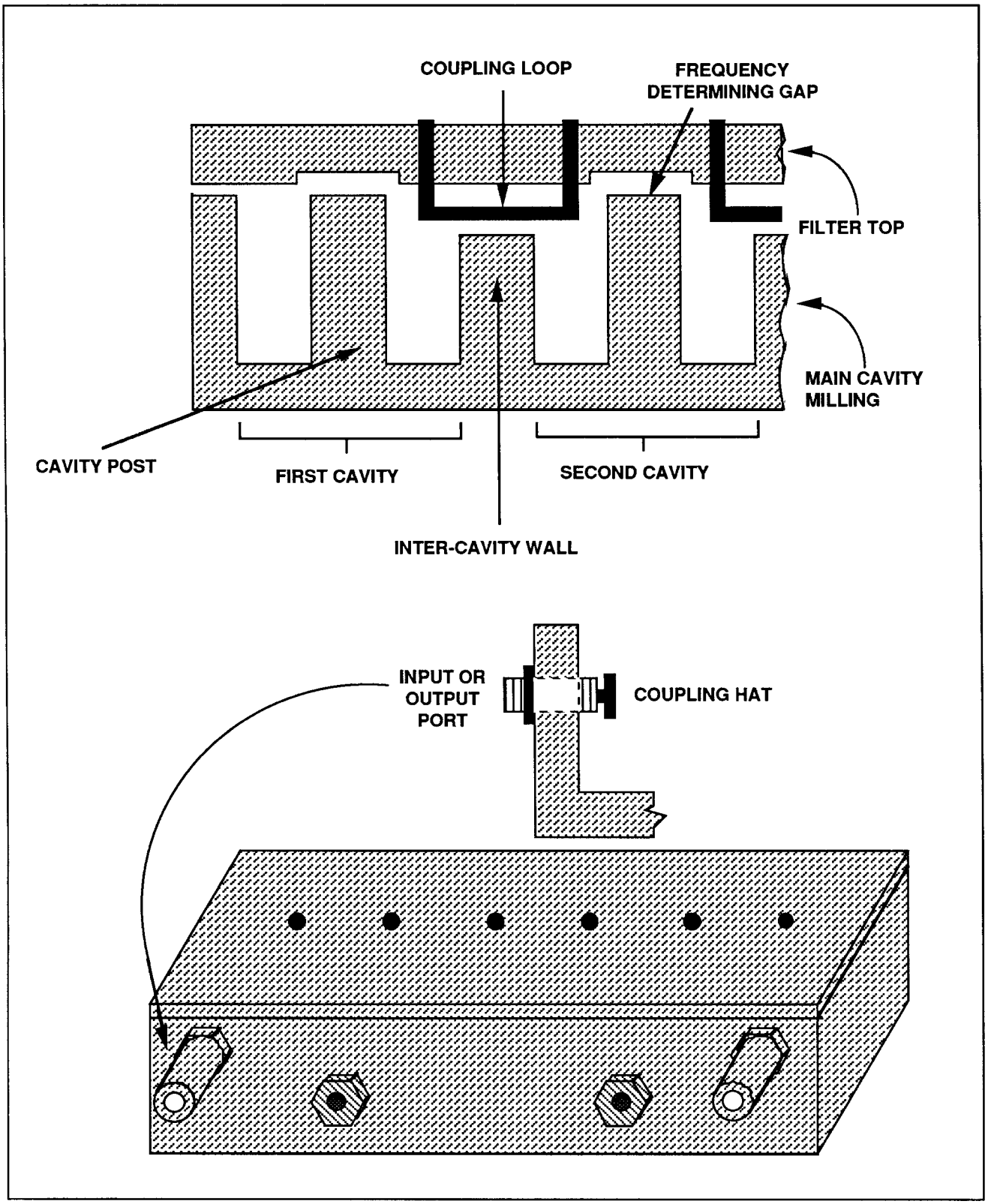

Figure 7–5. Cross-section of Bandpass (4-cavity) Filter.

RF MOTHER BOARD AND PHASE-LOCKED 2nd LO S2

Overview

The RF Mother board assembly consists of two circuit boards; the RF Mother board and the Phase-Locked 2nd LO board. Refer to Figure 7-6 for a functional block diagram of the assembly and, if more detail is needed, refer to schematic diagrams S2a and S2b. The primary function of the RF Mother board assembly is to convert the 2110 MHz signal (1st IF) down to 10 MHz (3rd IF). The RF Mother board performs a two-step conversion of the 1st IF. The 1st IF is converted to the 2nd IF (110 MHz), then the 2nd IF is converted down to the 3rd IF. A band-pass filter between the conversion stages limits the maximum instrument bandwidth to 5 MHz. The resultant 3rd IF is then routed to the VR module. The RF Mother board also serves a secondary function of filtering supplies and control signals before passing them to the Attenuator assembly.

Phase-Locked 2nd LO

A 2 GHz VCO (2nd LO), locked to the 100 MHz reference frequency, provides the LO frequency needed for driving the 2nd converter. The 2nd LO board houses the oscillator and a frequency control loop consisting of a 12 dB coupler, a ÷4 IC, a mixer and search oscillator, and an error amplifier.

2 GHz Voltage-Controlled Oscillator (VCO)

With appropriate feedback, Q112, an NPN transistor configured as a common-base amplifier, is biased such that it exhibits negative resistance characteristics at the collector. A fixed length of semi-rigid coaxial cable is connected to the collector of the transistor. At power-up, this coaxial cable together with the feedback capacitors causes the transistor to go into oscillation; the length of the cable establishes an oscillation frequency. As the oscillation frequency increases, the negative resistance starts to go positive. A steady state is reached when the absolute value of the negative resistance equals the external impedance at the collector. The frequency is then tuned by trimming a printed capacitor at the emitter with a fixed voltage at the collector. When locked, a control loop alters the oscillation frequency by varying the collector voltage, changing the amount of internal feedback (internal capacitance) in the transistor.

Control Loop

A 12 dB coupler couples the 2 GHz signal (at –12 dBm) from the oscillator to U424, a ÷4 IC that generates a 500 MHz signal. U511 mixes the 500 MHz signal with the 5th harmonic of the 100 MHz reference, producing a DC error voltage proportional to the phase error between the 100 MHz reference frequency and the VCO frequency. An error amplifier integrates the error voltage and produces a tune voltage that controls the collector voltage of the oscillator. The controlling tune voltage keeps the VCO frequency phase locked to the 20th harmonic of the 100 MHz reference.

Main RF Mother Board

On the RF Mother board, 2110 MHz from the 1st Converter is mixed in two stages down to the 3rd IF. A 5 MHz-wide bandpass filter between the two conversion stages determines the maximum available bandwidth for the spectrum analyzer. Additional circuitry on the board distributes a 100 MHz reference signal, while another section passes signals and supplies to the attenuator.

Down Conversion

The 2nd converter mixes the 2110 MHz signal (–31.5 dBm) from the 1st Converter with the 2000 MHz LO (+12 dBm) from the VCO on the Phase-Locked 2nd LO board. A +13 dB gain amplifier is inserted between the 2nd LO board and the 2nd converter input. The +13 dB amplifier also matches the amplifier output to the input impedance of the 2nd converter LO port, approximately 10 Ω. Because the 2nd converter has a conversion loss of 7 dB, the 110 MHz 2nd IF output is at –38.5 dBm.

The 2nd IF passes through a low-pass filter, four amplifiers, one variable attenuator, two fixed attenuators, and a band-pass filter. The low-pass filter, having a 200 MHz low-pass response and 1 dB insertion loss, transforms the 2nd converter's low output impedance up to 50 Ω and filters any undesired conversion products. Two 8.5 dB amplifiers, with a 2 dB attenuator between them, amplify the 2nd IF by 15 dB and route the –25 dBm signal to a variable attenuator. The variable attenuator, set by an IF gain adjustment, applies 3 dB to 6 dB of attenuation to the IF signal. Assuming the variable attenuator applies 3 dB of attenuation, the –28 dBm signal passes through two more 8.5 dB gain amplifiers and a 2 dB

attenuator for another 15 dB gain. Now at a level of –13 dBm, the signal is filtered by the 5 MHz band-pass filter that has 5 dB of insertion loss. The filter establishes the maximum instrument bandwidth. The 2nd IF, having a power level of –18 dBm, is then routed to the 3rd converter.

The 3rd converter, which has a conversion loss of approximately 10 dB, mixes the 2nd IF (110 MHz) with 100 MHz and produces the 3rd IF, 10 MHz. A low-pass filter with approximately 1 dB of insertion loss removes unwanted high-order conversion products before routing the signal to a final amplifier and attenuator. The final amplifier has a gain of 11.0 dB, and, together with the 2 dB attenuator, yields a total gain of 9.0 dB. The –20 dBm, 10 MHz, 3rd IF output is routed to the VR module.

100 MHz Distribution

A –4 dBm, 100 MHz signal from the Reference Oscillator board is routed to the RF Mother board through J410. The 100 MHz signal first passes through a low-pass filter before it is routed to two amplifiers, U610B and U610C. The output of U610C is routed to an amplifier (Q740 and Q741) whose output provides the LO for the 3rd converter. The output of U610B is routed to the Phase-Locked 2nd LO board.

Attenuator Supplies and Signals

Passive circuits filter supply voltages and digital control signals before routing them to the Attenuator board. The filtering is used to prevent stray signals from reaching the instrument's front end and producing spurs.

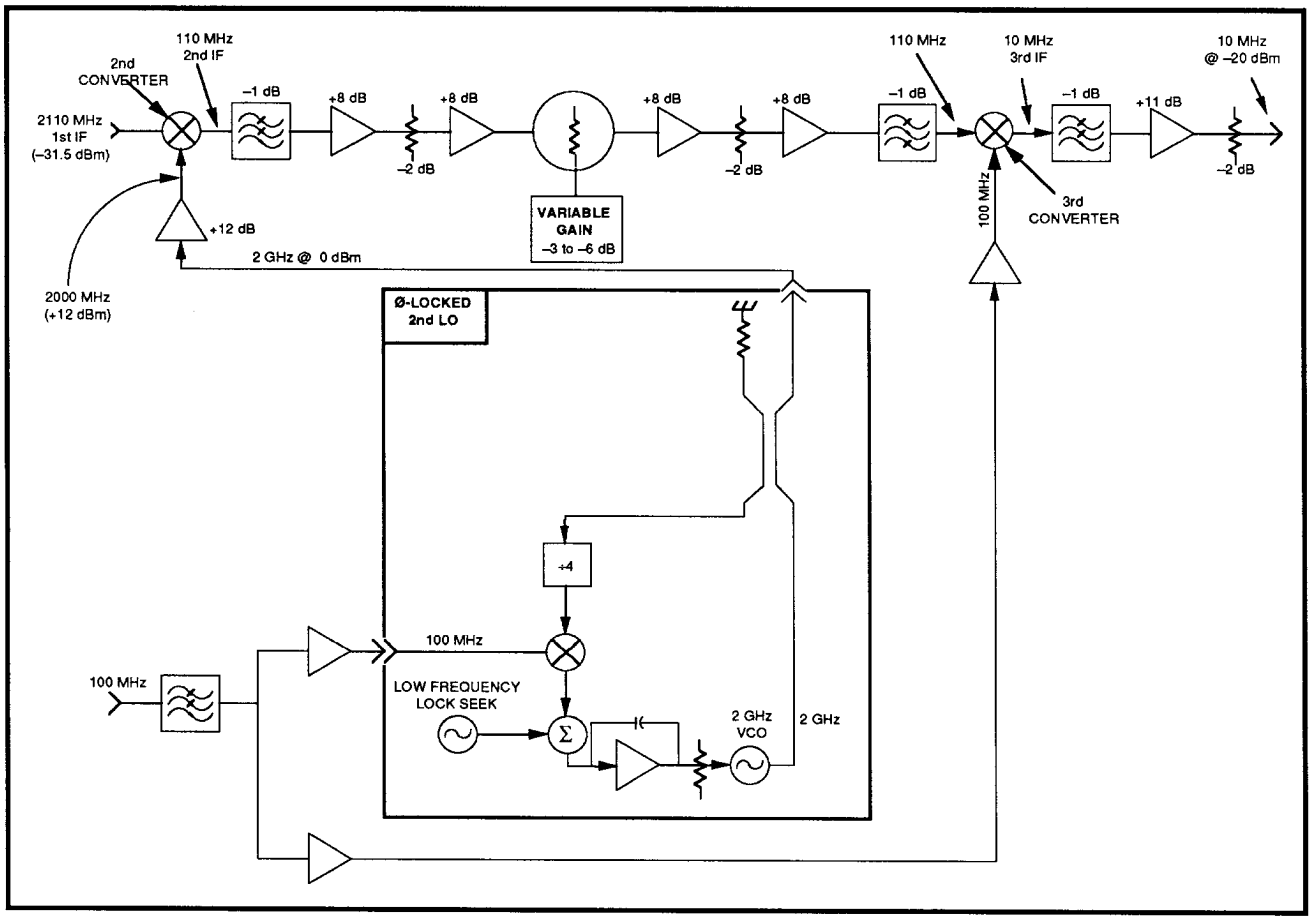

Figure 7–6. RF Mother board assembly block diagram.

1st LO INTERFACE, 1st LO, AND 1st LO BUFFER AMPLIFIER S3

1st LO INTERFACE AND 1st LO

The 1st LO has a tuning range of 2.11 to 3.91 GHz. The oscillator assembly includes the interface circuit board that couples operating and tuning voltages from the Center Frequency Control board.

Two Zener diodes on the Interface board clamp transient voltages from the main coil. See Figure 7-7.

When the FM coil is used to sweep the oscillator, the relay on the Interface board closes and couples a large capacitor (two capacitors in parallel) across the main coil. The capacitors lower the noise bandwidth of the main coil driving circuit while the FM coil is in operation. The heater provides temperature stability.

The rest of the circuitry on the Interface board provides operating voltages for the two amplifiers in the 1st LO assembly.

The output of the 1st LO drives the 1st LO Buffer Amplifier.

1st LO BUFFER AMPLIFIER

The 1st LO Buffer Amplifier consists of the following:

- An automatic level-controlled (ALC) amplifier
- Strobe Driver
- Sampling Gate

ALC Amplifier

The ALC Amplifier is composed of a wide-band amplifier with impedance matching transmission lines at the input and output, a directional coupler, a detector, a level comparator, and active bias. See Figure 7-8.

The directional coupler couples approximately –15 dBm of the amplified LO signal to the detector. The coupled signal is then amplitude detected, and the resultant DC level fed to the non-inverting input of a comparator, where it is compared to a reference DC level. (The reference DC level is connected to the inverting input). The output of the comparator then controls the active bias tending to hold the amplifier's output at a constant level.

Strobe Driver

A Strobe signal from the Center Frequency Control assembly is coupled to the Strobe Driver. The Strobe Driver is a transformer-coupled gain stage. The Strobe Driver's output is coupled to the Sampling Gate.

Sampling Gate

A power divider at the input of the amplifier routes 50% of the 1st LO's output to another power divider. One port of the second divider is reserved for Option 15 and is terminated in 50 Ω. The other port is coupled to the Sampling Gate.

If the output frequency of the 1st LO were stable, LO sampling would occur at the same level since the rate at which the LO output is sampled is constant. However, the LO output has a tendency to drift slightly under certain conditions, such as unstable ambient temperature. Consequently, sampling occurs at different levels, resulting in a beat note. Thus, the Beat Note signal is a measure of the 1st LO's drift.

The output of the Sampling Gate is routed to the Phase Lock Center Frequency Control (PLCFC) module.

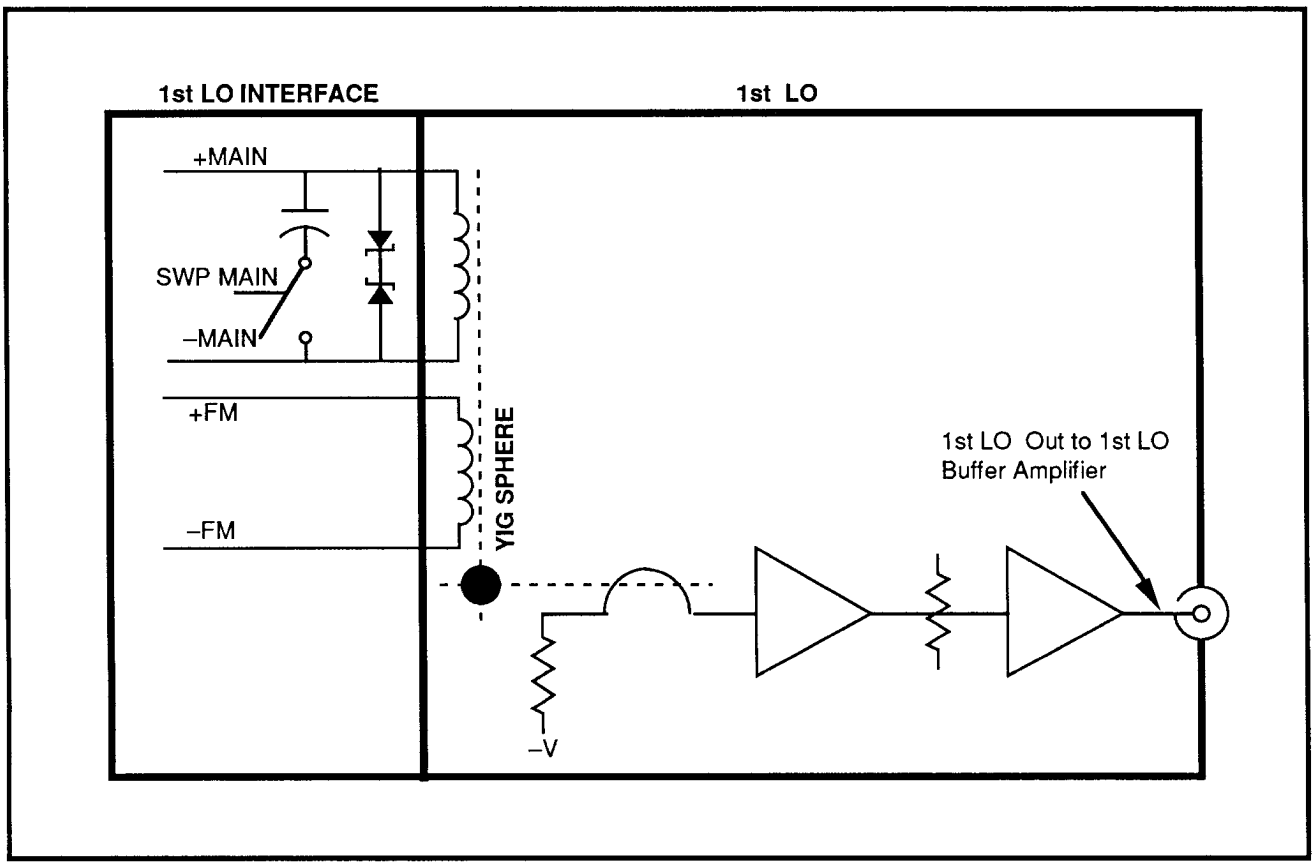

Figure 7-7. 1st LO Interface and 1st LO.

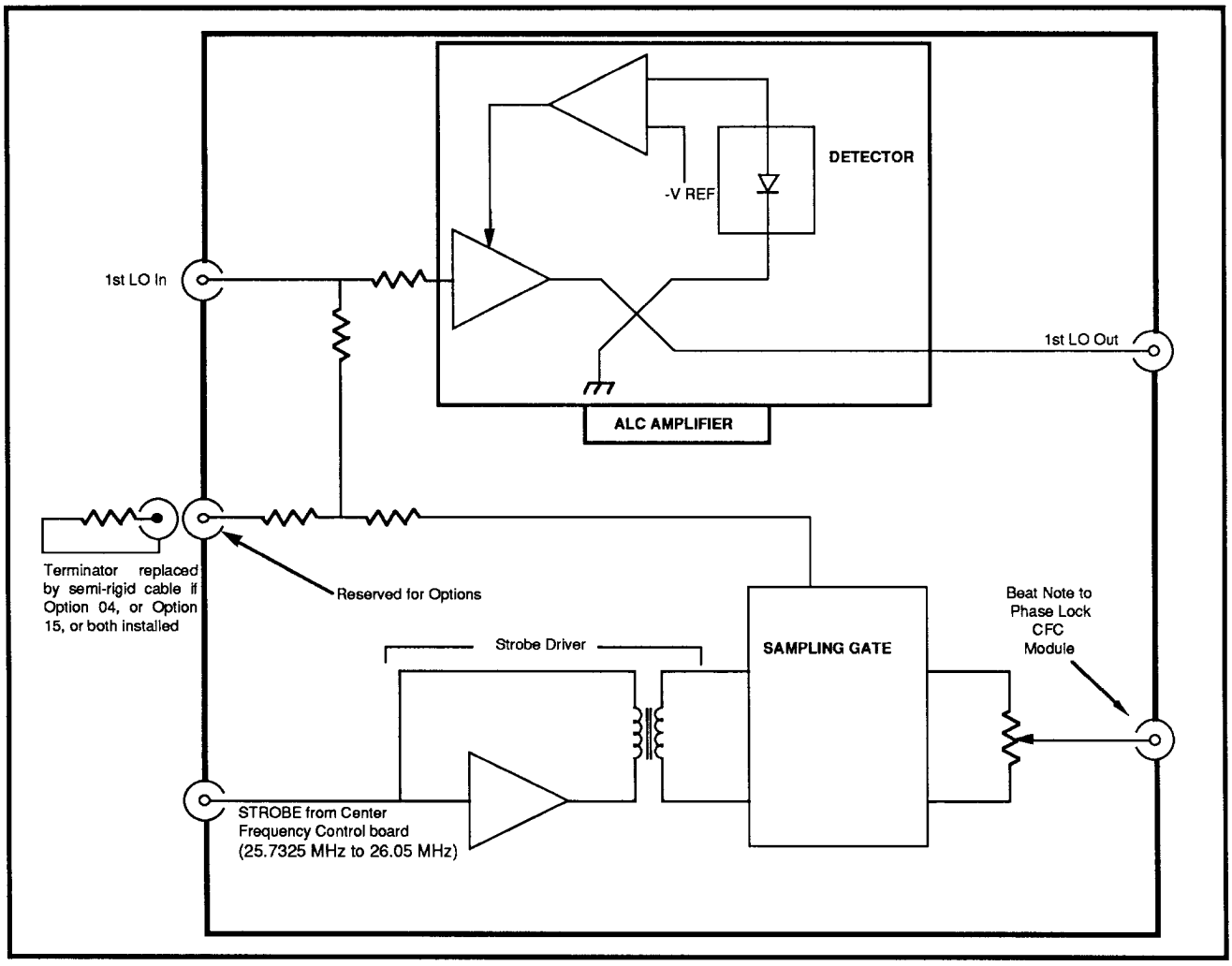

Figure 7–8. 1st LO Buffer Amplifier.

REFERENCE OSCILLATOR S4

The Reference Oscillator board provides a 100 MHz frequency reference and amplitude reference for the spectrum analyzer. The frequency reference enables the high counter accuracy.

Firmware-based routines use the Amplitude Calibrator output as a reference for calibrating internal gain settings.

The Reference Oscillator consists of the following blocks of circuitry:

- Power Supply Regulation
- Heater
- Oscillator
- Distribution
- Amplitude Calibrator
- Microprocessor Interface

See Figure 7-9.

Power-Supply Regulation

The Oscillator and the Amplitude Calibrator are furnished with stringent, on-board, power-supply regulation to minimize power-supply ripple. Otherwise, both the Oscillator and the Amplitude Calibrator would produce FM sidebands proportional to power-supply ripple amplitude and frequency.

Crystal Heater

The Crystal Heater maintains the oscillator crystal's case temperature within a 3° window of the crystal's operating temperature (near 70° C) over the instrument's operating temperature range. The crystal leads sink heat such that the crystal inside the case operates at temperatures below the case temperature.

The heater circuit maintains a constant 15 V across the heater element regardless of power-supply ripple. The circuit is shown in Figure 7-10.

Oscillator

The oscillator generates the 100 MHz reference frequency that is used by the instrument firmware to enhance frequency accuracy. Figure 7-11 shows the AC equivalent for the oscillator. At resonance, the tank inductor and capacitor Lt and Ct exhibit an open-circuit condition, and the LC equivalent of the crystal (Lm and Cm) exhibit a short-circuit condition. Thus, at resonance, the open-loop gain is calculated as:

$$A = \frac{R_t}{(r_{e1} + r_{e2} + r_s)}$$

This gain must be greater than unity to ensure oscillation.

At oscillation, the loop gain is unity and the phase 0°. If the phase delay of Q1, Q2, or the tank changes, the operating frequency must also change to maintain a 0° loop phase-shift. Because of this phase/frequency shift dependency, the Q of the parallel tank circuit is made as low as possible to minimize the tank phase change as the values of Lt and Ct drift.

The component values of the tank circuit are determined by the voltage swing at the collector of Q2 (Figure 7-12). The collector of Q2 drives an ECL line receiver. Therefore, the collector voltage should swing 1 V peak-to-peak about 3.8 VDC (3.8 V being the ECL Vbb bias voltage). The gain of Q2 is calculated as:

$$A = \frac{R_{c2}}{(r_{e1} + r_{e2} + r_s)} = 3.$$

The voltage swing required across the tank circuit must be at least equal to the ratio of 1 V to the calculated gain, which is 0.3 V. If the bias current available in Q1 is 3.6 mA, then the tank resistance required is calculated to be:

$$\frac{0.3\ \text{V}}{3.6\ \text{mA}} = 83\ \Omega$$

Distribution

The Fan Out circuit represents an ECL line receiver. This circuit receives the 100 MHz signal from the Oscillator and steers it to the following circuits at –4 dBm.

- RF Mother Board
- Microprocessor (Counter Section)
- CFC Board
- Port reserved for future option
- Amplitude Calibrator on the Reference Oscillator board.

Amplitude Calibrator

The Amplitude Calibrator receives a 100 MHz signal from the Fan Out circuit. The level of the 100 MHz signal is adjusted, and the resultant calibrator signal is then routed to a switch on the Step Attenuator board.

When enabled by the Microprocessor, a differential pair of transistors switch a carefully controlled current on and off across a 56.2 Ω resistor. The resulting signal, with a –22 dBm level, is routed to the calibrator port through a pad.

Microprocessor Interface

The Microprocessor Interface is used by the Microprocessor board to communicate with the Reference Oscillator board. An 8-bit input shift register controls the operation of the board, and an 8-bit output shift register contains frequency correction bits for indicating the Oscillator frequency. The microprocessor clocks (CLKO) eight bits of serial data (DATAO) into the input serial register, and it then latches the serial contents (RFLATCH–) to the parallel outputs. The microprocessor clocks data out of the output register by setting bit 7 of the input register low to enable the Buffer (see Figure 7-9) and using CLKI– to clock serial DATAI out. Refer to Table 7-1 for the bit mapping of the registers.

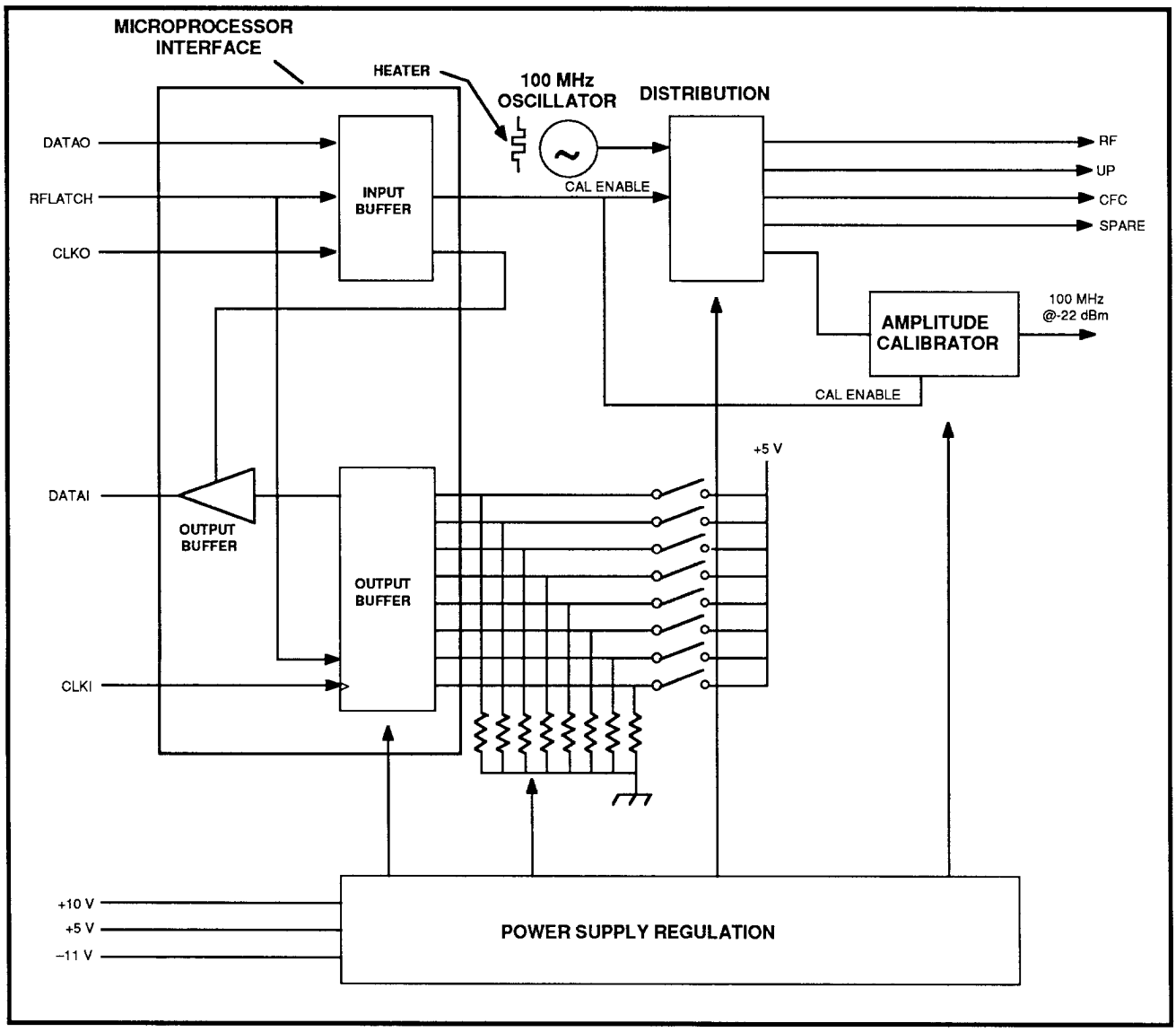

Figure 7-9. Reference Oscillator Block Diagram.

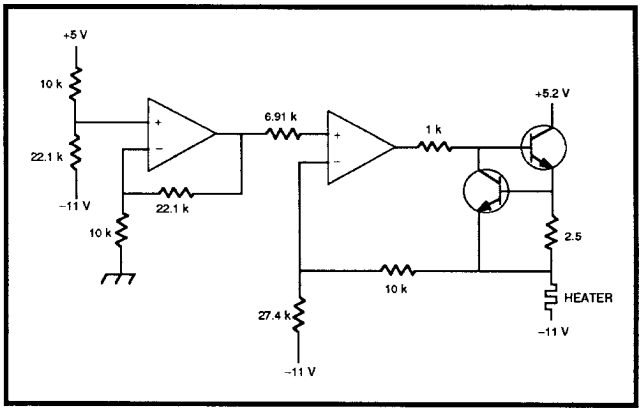

Figure 7-10. Crystal heater and 15 V regulation circuit.

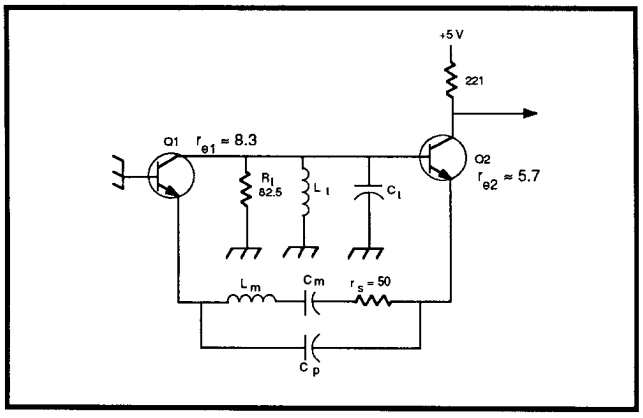

Figure 7-11. Oscillator AC equivalent.

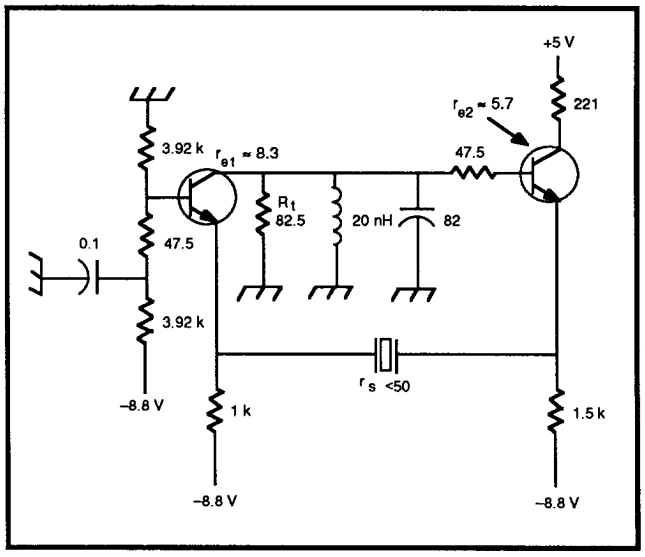

Figure 7-12. Oscillator DC equivalent.

Table 7-1
INPUT AND OUTPUT BIT DEFINITION

Input Register		Output Register		
Bit	Function	Bit	Function	
0	Cal Enable	0	CB 0	1
1	None	1	CB 1	2
2	None	2	CB 2	4
3	None	3	CB 3	8
4	None	4	CB 4	16
5	None	5	CB 5	32
6	None	6	CB 6	64
7	Output Enable	7	CB 7	128

CB = Correction Bit

Bit 0 of the input register is the last bit to leave the microprocessor, and bit 0 of the output register is the last bit to reach the microprocessor.

Bit 0 of the input register enables the calibrator signal when high and disables it when low. Bit 7 of the input register allows the microprocessor to read the contents of the output register when set low, and it tri-states the output buffer when set high.

The output register has 8 bits available to represent the Oscillator frequency. The microprocessor can then read the Oscillator frequency through these bits to within 10 Hz. The possible values are 1 through 254. The microprocessor interprets a value of 128 as a frequency of 100 MHz, 127 as 99,999,990 Hz, 129 as 100,000,010 Hz, etc.

Values 0 (all bits low) and 255 (all bits high) are used to send a hardware failure message to the Microprocessor.

PHASE LOCK ASSEMBLY S5a, S5b, & S5c (CENTER FREQUENCY CONTROL SYSTEM)

Overview

There are three major operating areas of the frequency control system.

In wide spans (10 MHz/div or greater), the center frequency is set coarsely by setting a suitable bias current in the main coil. Fine increments of the center frequency are set by appropriate currents to the FM coil. In this mode, sweeping over the span is accomplished by summing a suitably scaled analog sweep signal with the drive to the main coil. The strobe signal is not even turned on except briefly when needed to assist in verifying the exact 1st LO frequency by counting the beat frequency.

In moderate spans (50 kHz/div through 5 MHz/div for 2712, 10 kHz/div through 5 MHz/div for 2711), sweeping is done by summing the scaled sweep signal with the drive to the FM coil. Additionally, a noise-suppressing low-pass filter is inserted into the main coil circuit to reduce residual FM and phase noise due to noise from the main coil driver. Otherwise, the setup is the same as for wide spans, including not using the strobe most of the time.

When the 2712 operates in narrow spans (20 kHz/div and less), the 1st LO is phase locked to a harmonic of the strobe frequency. Coarse control of the center frequency is effected by choosing which harmonic of the strobe frequency is used (by setting an appropriate main coil current before commanding the hardware to lock). Sweeping and fine control of center frequency are done by controlling the strobe frequency. When phase locked, the FM coil is used solely by the loop to adjust the 1st LO to zero phase error.

PLCFC Module Functional Blocks

The module circuitry can be grouped into the following functional areas.

- Power Supply Regulation
- 1st LO Coil Drivers for the Current Source
- Strobe Frequency Generator (VCO Module)
- 1st Phase Lock Loop and Beat Note Processor
- Digital-to-Analog Conversion
- Digital Interface

POWER SUPPLY REGULATION

There are six regulated supplies on the PLCFC circuit board itself and two additional regulators in the VCO module.

–5 V Reference Supply (–5 VREF)

This is a precision reference supply for those circuit applications where a critical frequency is directly dependent on a voltage or current.

This supply consists of VR160, U166, U174, Q170, Q674, and associated components. VR160 is a temperature compensated reference diode that defines the output voltage. U166 and Q170 constitute a buffered scaling amplifier to provide the desired –5 V output at sufficient current. C660 makes the closed-loop bandwidth very low to minimize noise from the reference diode on the output. U174 and Q674 convert –5 V to +10 V to provide stable low- noise current to the reference diode through R171. The +8.5 V path through CR175 is used to guarantee start-up of the supply. CR175 disconnects the potentially noisy start-up source once the emitter of Q674 goes sufficiently positive.

–5 V Supply

This supply is not to be confused with the –5 V Reference Supply.

This supply is regulated by U470 and serves solely as a reference for the remaining four supplies on the board. U470 is a programmable shunt regulator whose output voltage is defined by an internal reference and by R472 and R473.

+8.5 V Supply

U282A and Q781 constitute a buffered operational amplifier used in the inverting configuration to provide +8.5 V from an input of –5 V. (Note that Q781 provides a phase inversion, so the polarities of the operational amplifier IC input pins have to be reversed from the usual practice.)

+15 V Supply

U380B and Q880 operate in the same fashion as the corresponding parts in the +8.5 V regulator.

–8.5 V Supply

U282B and Q780 serve as a buffered operational amplifier in the non-inverting configuration to provide –8.5 V.

+5 V Supply

U380A and Q881 serve as a buffered operational amplifier used in an inverting configuration to provide +5 V. (Note that Q881 is used in non-inverting fashion, so that the normal polarities of the operational amplifier IC terminals apply here for a change.)

The regulators in the VCO module will be discussed later in this section.

1ST LO COIL DRIVERS CURRENT SOURCE

It is desirable to drive the 1st LO coils from high impedance sources so that temperature dependent changes in winding resistance have negligible effect on stability.

Main Coil Driver

U921 and Q521 constitute a buffered operational amplifier used in an inverting configuration. Inputs to the summing junction are from a number of sources and all pass through Q920. R900 (a current sense resistor in the return lead of the main coil) develops a voltage proportional to main coil current. This voltage across R926 defines the feedback current to the summing junction of the operational amplifier. This circuit forces 1st LO main coil current to be proportional to the sum of the currents from the various control sources, which is described later. The normal operating current range of the main coil is from approximately 135 mA to 255 mA.

Q920 is a switch that is normally conducting and consequently has no significant impact on circuit operation as described. However, it is sometimes necessary to momentarily set the main coil current to zero in order to standardize frequency errors due to hysteresis in the 1st LO magnetic structure. When this is desired, the microprocessor asserts the DEGAUSS line HIGH (by way of the digital interface circuits), which causes Q931 and Q930 to pull the gate of Q920 to –8.5 V. This opens the switch, disconnecting the normal input and feedback paths of the circuit. R929 provides a slight negative feedback in this situation, ensuring that the main coil current goes to zero instead of to some undefined value.

The main coil current is the sum of at least two items. First, there is a large fixed bias current stemming from the reference supply and R923 (trimmed by R931 and U920) to set the 1st LO at 3.01 GHz in the absence of other inputs. Second, there is a current induced by DAC U950A (and subsequent circuits) which is used to steer the 1st LO over the range from 2.11 to 3.91 GHz. This current is normally a steady state value selected by the microprocessor to coarsely set the center frequency. Third, if the instrument is set to a span greater than 5 MHz/div, there is a sawtooth sweep waveform summed into the main coil current through switch U830A. This corresponds to the wide span operating mode discussed earlier in the Block Diagram description).

FM Coil Driver

U811 and U810 together form a buffered operational amplifier used in the inverting configuration. Input currents to the summing junction come from a variety of sources, to be described later. R905 is the current sense resistor for the FM coil. The voltage developed across it results in the current fed back to the summing junction through R815. Thus, this circuit forces a current through the FM coil proportional to the sum of the various control currents put into the summing junction. The normal current range for the FM coil is from approximately –120 mA to +120 mA.

Q910 and Q911 serve as a low resistance switch. When closed (gates held several volts positive) the FM coil driver operates as described above. When open (gates held several volts negative) the driver is disconnected and the FM coil gets its current out of R714, which is the situation when the instrument is phase locked. Control of the switch state is through Q703 and Q800 from the signal PLLCON–. This signal is LOW when the instrument is phase locked. Several other switches are also controlled by the same command. R812 keeps U811 out of saturation when the switch is open.

When the FM coil driver is in use (instrument not phase locked) there are two potential signal sources summed into the driver circuit. One that is always present is induced by DAC U850A and subsequent circuits, is steered into U821 by switch U757A, and serves to finely set the center frequency. The other is selected only in moderate spans. It is the sawtooth sweep waveform used to sweep the 1st LO over spans ranging from 10 kHz/div through 5 MHz/div for the 2711 and 50 kHz/div through 5 MHz/div for the 2712.

STROBE FREQUENCY GENERATOR (VCO MODULE)

Functionally, this module is a voltage-controlled frequency source that has an output frequency ranging from 25.73 MHz through 26.05 MHz in response to a tuning voltage ranging from approximately 4 V to 12.5 V. There is also a switch to select which of two signals is counted by the microprocessor, and there are means to turn off the output.

The strobe frequency comes from a VCO that ranges from 102.9 MHz through 104.2 MHz and whose output frequency is divided by four to yield the desired strobe frequency. Its frequency is controlled by phase locking it (with a 100 MHz offset) to 1/4 the frequency of a free-running VCO (the LFVCO) that operates over a frequency range of 11.68 MHz through 16.84 MHz. It is this LFVCO that is actually tuned by the incoming tuning voltage referred to earlier, and this phase-locked loop within the VCO module is called the inner loop The strobe signal is generated in this manner in order to control close-in phase noise and to provide a countable signal (the LFVCO output) whose frequency is not condensed into a very narrow range that would require long times to count to adequate resolution.

The LFVCO consists of Q426, T430, the varactors CR532 and CR540, and associated components. Output (from the collector of Q422) is made available for external counting through selector switch U240. LFVCO output frequency is also divided by four through U410, and the result is the reference frequency for the inner loop. U512 and U510 serve as a phase/frequency detector for the inner loop. The differential output of the phase detector is passed through error amplifier U435 and becomes the tuning voltage for the HFVCO.

The HFVCO consists of Q522, L610, varactor CR511, trim capacitor C611, and associated parts. Output is taken from a tap on L610, then split through a pair of isolation amplifiers (Q400 and Q410 plus Q316). Output from Q400 is divided by four in U300, providing the useful strobe frequency output of the module. HFVCO output from Q316 is applied to one input of a mixer (U320), whose other input is supplied with 100 MHz

energy from the Reference Oscillator. The useful output of the mixer is the difference frequency between the HFVCO (say, 103 MHz) and the 100 MHz reference, namely 3 MHz. This signal is amplified (by Q310, Q312, etc.) and applied to the remaining input of the phase/frequency detector, thus closing the inner loop.

U240 serves two functions; both controlled by the logic signals CNTSELA and CNTSELB. First, it allows turning the HFVCO on or off by means of Q425. When the oscillator is turned off, Q101 is turned on at the same time to shut down the strobe driver amplifier in the 1st LO BUFFER module. Also, U240 serves as a count selector switch. It selects either the LFVCO signal or the 1st LO beat signal (from the PLCFC board) for counting by the microprocessor. R241 is part of a TTL to ECL level shifter, the remainder of which is located on the microprocessor board.

U510B provides a lock status indicator for the inner loop so that a lock failure can interrupt the microprocessor through circuitry on the PLCFC board.

The HFVCO receives supplementary power-supply regulation by means of U122.

The LFVCO receives supplementary power-supply regulation by means of U123, Q223, and associated parts.

1ST LO PHASE-LOCK LOOP (Outer Loop) and BEAT NOTE PROCESSOR

The output of the phase gate in the 1st LO Buffer module may either be a beat note (when loop is unlocked) or a phase error voltage for maintenance of lock. Thus, the output of the phase gate is split into two paths.

Beat signals in the range of approximately 3 kHz through 11 MHz are passed through a chain including U614, a low-pass filter, U723, and U720, to a Schmitt trigger circuit (Q630 through Q633), which produces a clean rectangular wave at TTL levels. The desired beat note, noise, and one or more weak, extraneous beat notes arising from 1st LO harmonics mixing with other harmonics of the strobe frequency, will normally be within the pass band of the low-pass filter . The level control, R620, sets the overall signal level so that only the desired beat note is strong enough to overcome the hysteresis designed into the Schmitt trigger. The Schmitt trigger output may be routed to the microprocessor through a selector switch on the VCO module.

Phase error information from DC through a few hundred kHz is passed through U606 and switch U700D (when phase lock is invoked) to error amplifier U713. The output of U713 is applied to the FM coil through R714. When phase lock is invoked by setting PLLCON to high, U700D is closed and U700C is opened, closing the outer loop. Nominally, the loop bandwidth is set to 20 kHz, but may vary considerably from this value due to frequency-dependent variations in the output level and slope of the phase gate. R709 provides for a known drift direction of the 1st LO tuning when the loop is first closed, but the initial frequency is away from lock. The instrument firmware purposely sets up a significant frequency offset in the direction that allows the loop to drift into lock, as a way of dealing with uncertainties in starting conditions.

The outer loop has a holding range of approximately ±2.5 MHz before U713 saturates. U650A and U650B form a window comparator that generates logic signals (either INCR MAIN or DCR MAIN) when the loop approaches a range limit so that the microprocessor can take corrective action (for example, changing the main coil current in the appropriate direction to re-center the loop). This allows for 1st LO drift or user changes to the center-frequency setting without having to drop and re-acquire lock for every little change.

If Q652 is turned on by the signal UNLKIND (signifying that the inner loop is unlocked), both INCR MAIN and DCR MAIN are turned on simultaneously, which is a unique condition that the microprocessor interprets as a hardware failure in the VCO module.

Summary Of Outer Loop Lock Acquisition

When the instrument is placed into a situation calling for phase-lock operation, several things are done by the firmware to arrange for a lock at the correct frequency.

The N number (that is, the harmonic order of the strobe to which the 1st LO will lock) is calculated, and the strobe and corresponding VCO frequencies needed are calculated. The sweep is disconnected, the FM coil DAC is set to mid-range (FM coil current to nominal zero), and the main coil DAC is set to the value that will place the 1st LO as close as possible to the desired 1st LO frequency (it can be several hundred kHz off because of the coarseness of the main coil DAC steps). Now the VCO is tuned by trial and error so that the strobe line, at a frequency of ($N \times F_{strobe}$), is approximately 100 kHz above the actual 1st LO frequency (that is, the measured beat frequency is 100 kHz on the correct side of zero beat). Then, lock is invoked by setting PLLCON high. Due to the intentional offset provided by R709, the 1st LO drifts rapidly into lock. After a suitable delay, acquisition of lock is verified by checking the states of both lock limit comparators and by checking that the beat frequency is zero.

At this point the loop is locked, but in the wrong spot. Now the microprocessor proceeds to tune the VCO (and consequently, the strobe and 1st LO) to the correct frequency by repeatedly tuning and counting the VCO. The sweep is then switched into the VCO tuning voltage, and the instrument is now scanning the desired spectrum range.

Signal Path and Switching Summary

Wide Span Operation (10 MHz/div and Higher Spans) – The Main coil is driven by a fixed bias summed with DAC U950A output and a sweep signal (routed through U830A).

The FM coil is driven with VCFC FM arising from DAC U850A only (routed through U757A). Current is routed through Q910 and Q911 to the FM coil. See Figure 7-13.

The VCO is not used except intermittently for frequency corrections, and it is tuned by a fixed bias summed with VCFCU arising from DAC U950B.

Moderate Span Operation (10 kHz/div through 5 MHz/div Spans for 2711, 50 kHz/div through 5 MHz/div Spans for 2712) – The Main coil is driven by a fixed bias plus a DAC output (U950A).

The FM coil is driven with VCFC FM arising from DAC U850A (routed through U757A) summed with the sweep signal (routed through U830B). Total current is routed through Q910 and Q911 to FM coil. See Figure 7-14.

The VCO is not used except intermittently for frequency corrections and is tuned by a fixed bias summed with VCFCU arising from DAC U950B.

Narrow Span Operation (20 kHz/div and Smaller Spans, 2712 Only) – The instrument is phase locked.

The Main coil is driven with a fixed bias summed with DAC U950A output. See Figure 7-15.

The FM coil is driven with the output of the phase-lock error amplifier, U713, only.

The VCO is active continuously and is tuned by a fixed bias summed with VCFCU from DAC U950B, VCFC L from DAC U850A (routed through U757D), and sweep voltage VSWP PLL (routed through U757B).

DIGITAL-TO-ANALOG CONVERSION

The PLCFC board has four 12 bit DACs in two IC packages, U850 and U950.

On the digital side, each package has four data lines, three address lines, and two control lines. The DACs contain internal registers for the 12-bit words associated with each analog output and, therefore, the microprocessor must write multiple 4-bit words to a package in order to set up a new output.

These are multiplying DACs. Each delivers an output current that is the product of an analog voltage (called the reference) and the 12-bit digital word. These units can correctly deal with either polarity of reference voltage. Three of them (U850A, U950A, and U950B) are supplied fixed reference voltages and serve simply as computer-controlled DC sources.

DAC U850A is called the FM DAC but serves two roles. In non-phase-locked spans, its output ultimately ends up fine-tuning the 1st LO center frequency through the FM coil. In phase-locked spans, its output is used to fine-tune the VCO frequency. In either case its output passes through U852, which has an output range of 0 to +5 V. U845 sums that with an offset and provides gain so that the output of U845 ranges from –5 V to +5 V. This signal is called VCFC (L/FM) and is routed to the appropriate destination by U757A and U757D.

Main Coil DAC U950A output passes through U952 and U940. U940 provides gain such that the output of U845 ranges from –5 V to +5 V, and the result is summed with the other components of the main coil current. Its function is coarse tuning of the 1st LO center frequency, in steps of approximately 400 kHz.

U950B is the PLL DAC. Its function is coarse tuning of the VCO frequency. Its output is converted to the –5 V to +5 V range by U954 and U941 before being summed with the other components of the VCO tune voltage.

Unlike the other DACs, U850B's reference input is supplied with the analog sweep waveform SWP (from the Sweep board through U565) and serves as a microprocessor controlled gain control to determine span/div. Its output passes through U854 to a decade attenuator composed of U831 and associated components. The output of the decade attenuator is then routed to the desired destination by switches U830A, U830B, and U757B. In wide spans, this signal sweeps the 1st LO main coil. In moderate spans, it sweeps the 1st LO FM coil. In phase locked spans, it is used to sweep the VCO frequency.

DIGITAL INTERFACE

This circuitry links the phase-lock hardware with the microprocessor. The link is bi-directional. Commands and DAC setting data are sent to the PLCFC module, and lock status information is sent back to the microprocessor. In addition, there is provision to loop input data back to the microprocessor to verify integrity of the interface circuitry.

The path into the PLCFC module is through a 24-bit shift register composed of U361, U460, and U560. Serial data on the DATAO line is shifted into the register by the clock signal CLKO. When all 24 bits have been shifted in, CFLATCH– is used to latch data simultaneously from all shift register stages to parallel output registers. The resulting 24-bit parallel word is used to control switches, set DACs, and do a number of other things on the module. A listing of the 24 lines and their functions appears later in this section.

CFCLATCH– also triggers U372 causing a delayed pulse on the WR– line, latching data into internal registers of the DACs.

U370 is an 8-bit shift register used for transferring data from the module back to the microprocessor. Serial data is shifted out on the DATAI line by the clock CLKI–, which is gated into the clock input of the register by U270C as controlled by CFCACK–. Data may be serially loaded into this register through the EXAM line coming from the tail end of the 24-bit input register. In this situation the data is clocked into the register by a derivative of CLKO, which is gated by LOADEXM through U270D. This is the loop-back path referred to earlier for checking the interface. This register may also be loaded with up to eight bits of parallel data for subsequent serial transfer to the microprocessor. Only three bits are used. Bits 7 and 8 are the signals (INCR MAIN and DCR MAIN) from the lock limits comparator, and bit 5 is wired to logic 1 as a board identity.

The gating of CLKI– and CLKO into the output shift register (by CFCACK– and LOADEXM, respectively) is partly a matter of source selection and is also necessitated because both clock signals are used by other boards in the system at some times.

Any transition on either INCR MAIN or DCR MAIN (or both) will load the new states of those lines into the output shift register. (The various sections of U360 serve as edge detectors to generate the load command to the shift register). Further, if LKINTEN is high at the time, U471B will end up SET, interrupting the microprocessor by way of CFCREQ–. The line READEXM provides a direct method of setting the interrupt, if desired. Any transition on LKINTEN will also cause the shift register to be loaded, providing a forced means for checking the status of the lock lines at any time. The microprocessor uses CFCACK– to clear U471 of the interrupt (in addition to the gating function mentioned above).

Summary of Digital Control Lines on PLCFC Module

READEXM – Low to high transition forces CFC interrupt.

LOADEXM – High level gates CLKO into output shift register clock input.

DEGAUSS – High level forces 1st LO main coil current to zero.

CNTSELA – A & B are decoded to set state of selector switch in VCO module. Both high is strobe OFF. A high and B low CNTSELB: is count VCO. A low and B high is count beat frequency. Both low is strobe ON but no count selected.

PLLCON – High-level commands phase lock configuration.

LKINTEN – High level enables interrupt on transition of either lock limit comparator line.

CAPCON – High level connects noise reduction capacitor across 1st LO main coil.

SWDECA – A & B are decoded to select setting of sweep decade attenuator. Both low is straight through. A high and B low is divide-by-10. A low and B high is divide-by-100. Both high is disconnect sweep.

SWSELA – A & B are decoded in U274 to operate switches that direct sweep waveform to proper destination.

SWSELB – Both low is sweep main coil. A high and B low is sweep FM coil. A low and B high is sweep VCO. Both high is sweep nothing.

A0, A1, & A2 – Address lines for DAC internal register selection and control.

UPD- – Used for simultaneous transfer to DAC output registers.

DB0', DB1', DB2', & DB3' – Data lines for DAC U950 (A&B).

DB0, DB1, DB2, & DB3 – Data lines for DAC U850 (A&B).

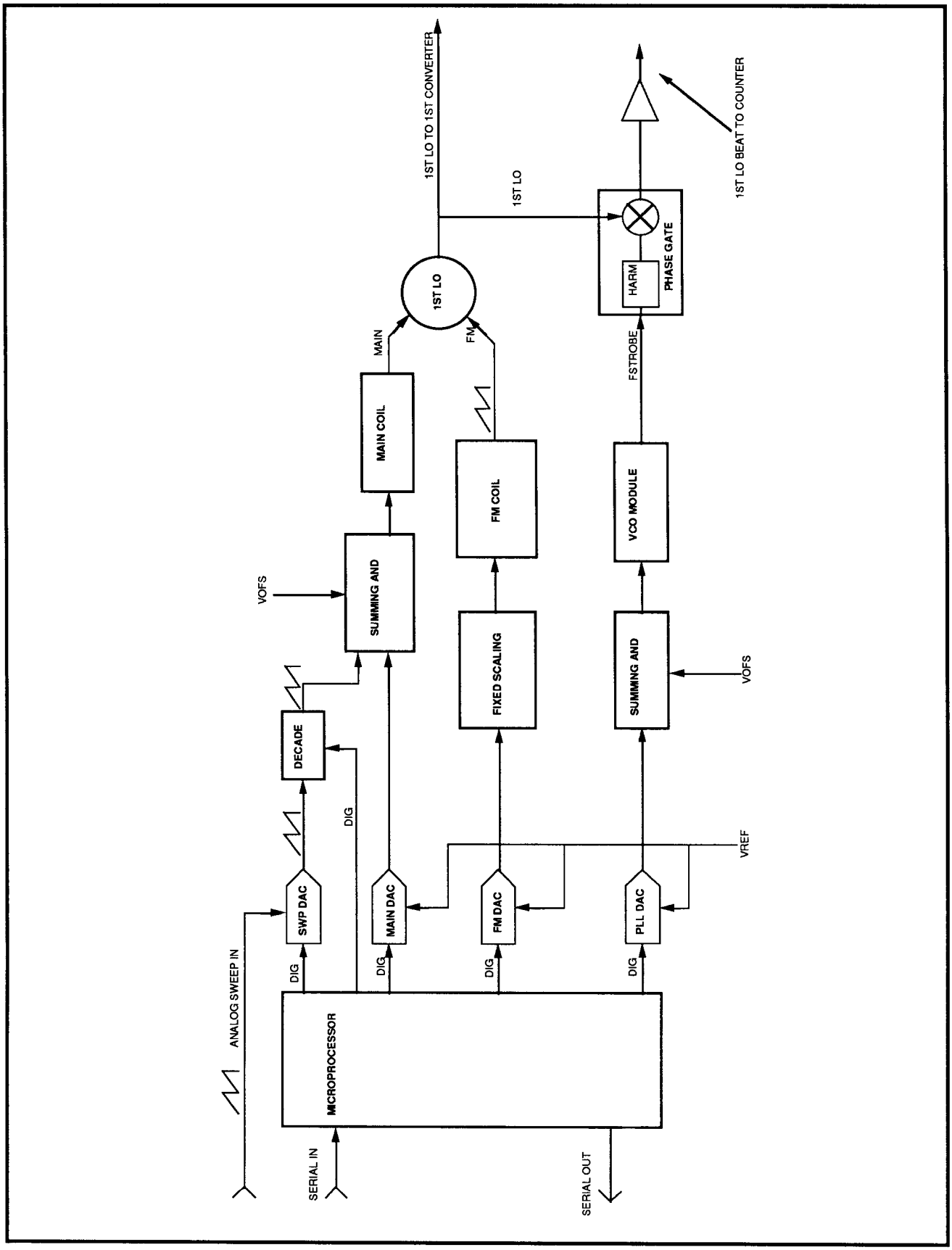

Figure 7-13. PLCFC configuration for wide spans (Unlocked, Sweep Main Coil).

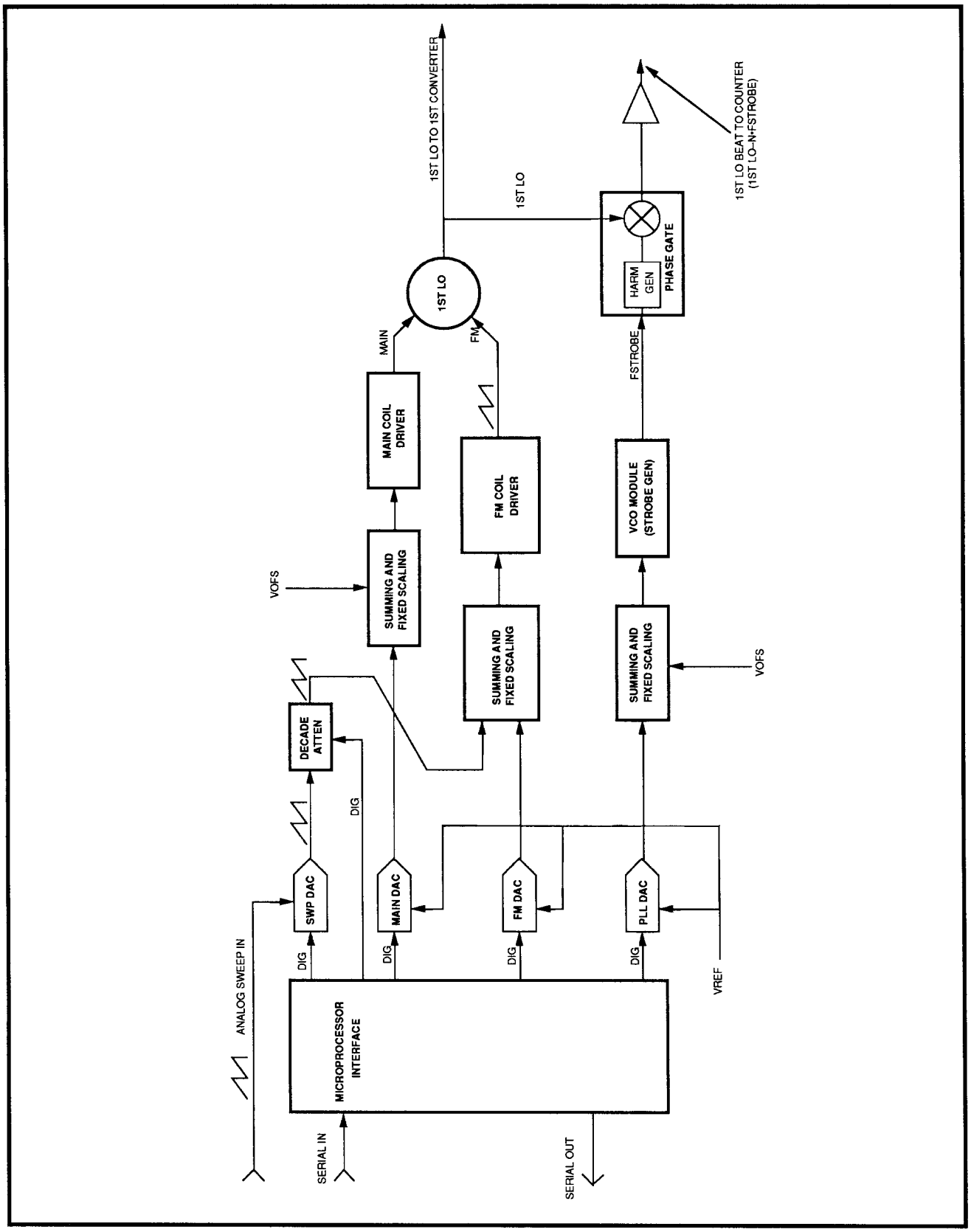

Figure 7-14. PLCFC configuration for moderate spans (Unlocked, Sweep FM Coil).

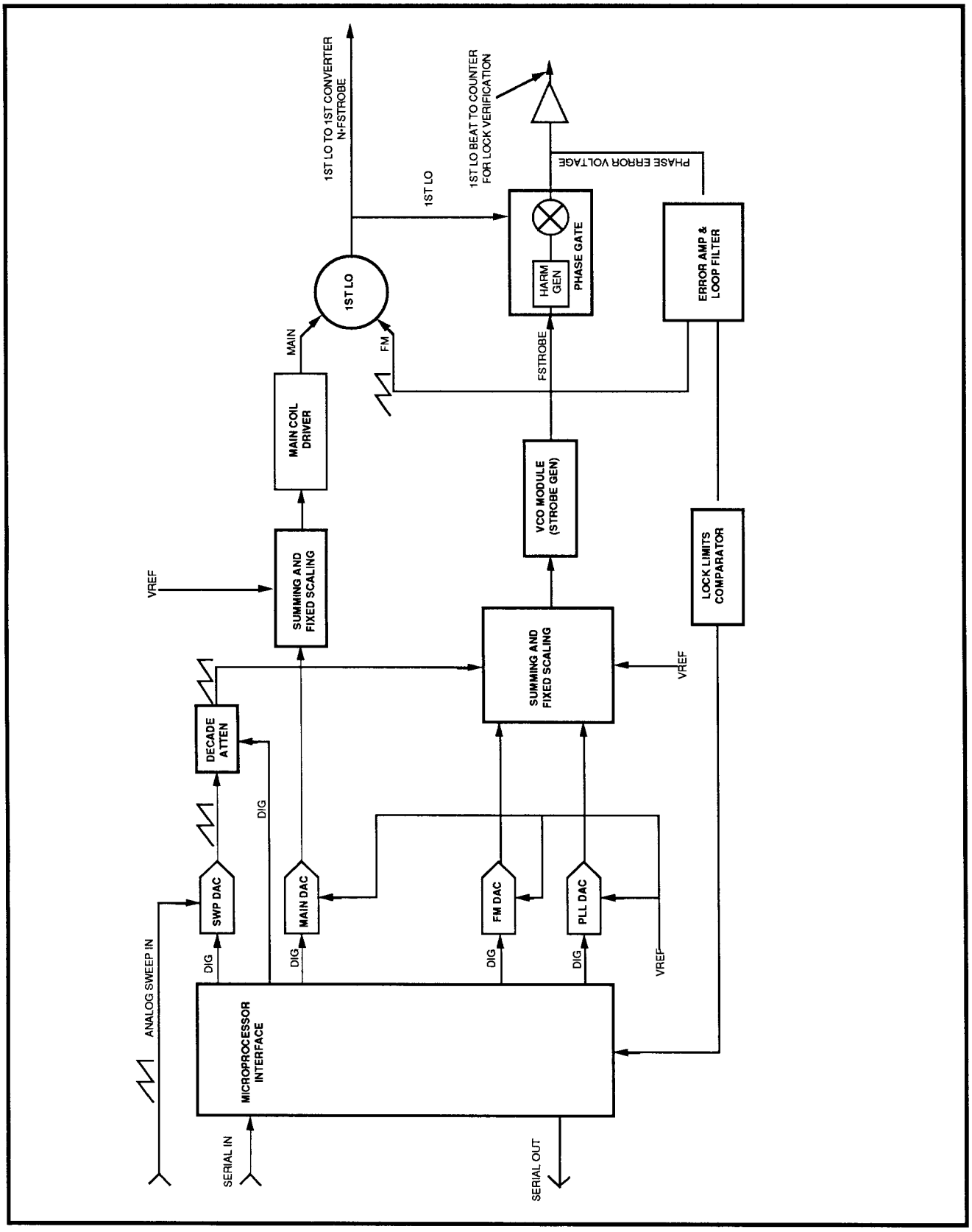

Figure 7-15. PLCFC configuration for narrow spans (Locked, Sweep VCO).

VARIABLE RESOLUTION MODULE S6 a & S6 b

Input Amplifier

The input amplifier used is a transformer feedback stage that provides approximately 12 dB of gain with 10 dB of reverse isolation. See Figure 7-16. The match at each port with the other terminated is better than 15 dB at 10 MHz. The noise figure is less than 3 dB and, with 12 mA flowing in the device, the output intercept is approximately +30 dBm. The match at each port is highly sensitive to a proper termination being presented to the other port.

PIN Attenuator

The PIN attenuator design is based upon a pair of reasonably well matched pin diodes used in a tee configuration. A characteristic of this configuration is that the impedance match at each end can be maintained, providing the product of the PIN diode resistances is equal to the square of the end terminations. This can be approximated if the sum of the currents in the PIN diodes is equal to a constant. The DAC has complementary current outputs whose total is set by an adjustment. The attenuation range is approximately 12 dB with a 1 dB minimum loss. The worst case return loss at the end points is 15 dB. The step-size for an 8-bit DAC is 0.04 dB steps in the center of its range.

10 dB Gain Step Amplifier

The 10 dB gain step stages also incorporate a transformer feed back amplifier. The stage has approximately 0.5 dB of loss or 9.5 dB of gain for a net difference of 10 dB. When the step gain is selected, the signal is routed through the amplifier for a gain of approximately 11.5 dB. A pad of approximately 1.5 dB is added to trim the gain down to 10 dB. The signal is then routed through a switch that has approximately 0.5 dB of loss. When the amplifier is deselected, the signal is routed around the amplifier altogether, thus preserving noise figure and intercept point. A total of four of these step gain stages are used.

1 dB Gain Step Amplifier

The 1 dB gain step amplifier is the last amplifier before the filter switching tree. The amplifier is composed of a class AB, three-stage, feed-back amplifier. The gain is adjusted in 2 dB steps for a total of 10 dB. The 1 dB steps are done by shunting part of the signal to ground appearing at the input of this amplifier. This configuration allows the entire 10 dB gain sequence to be contained within one step-gain stage.

Routing Switches

The routing switches are used to route RF signals to various areas. They are composed of a transistor in heavy saturation that has the characteristics of relatively large charge storage characteristics. The topology used is a shunt series configuration. These switches are used on both the input and output of each filter including the external filter connection.

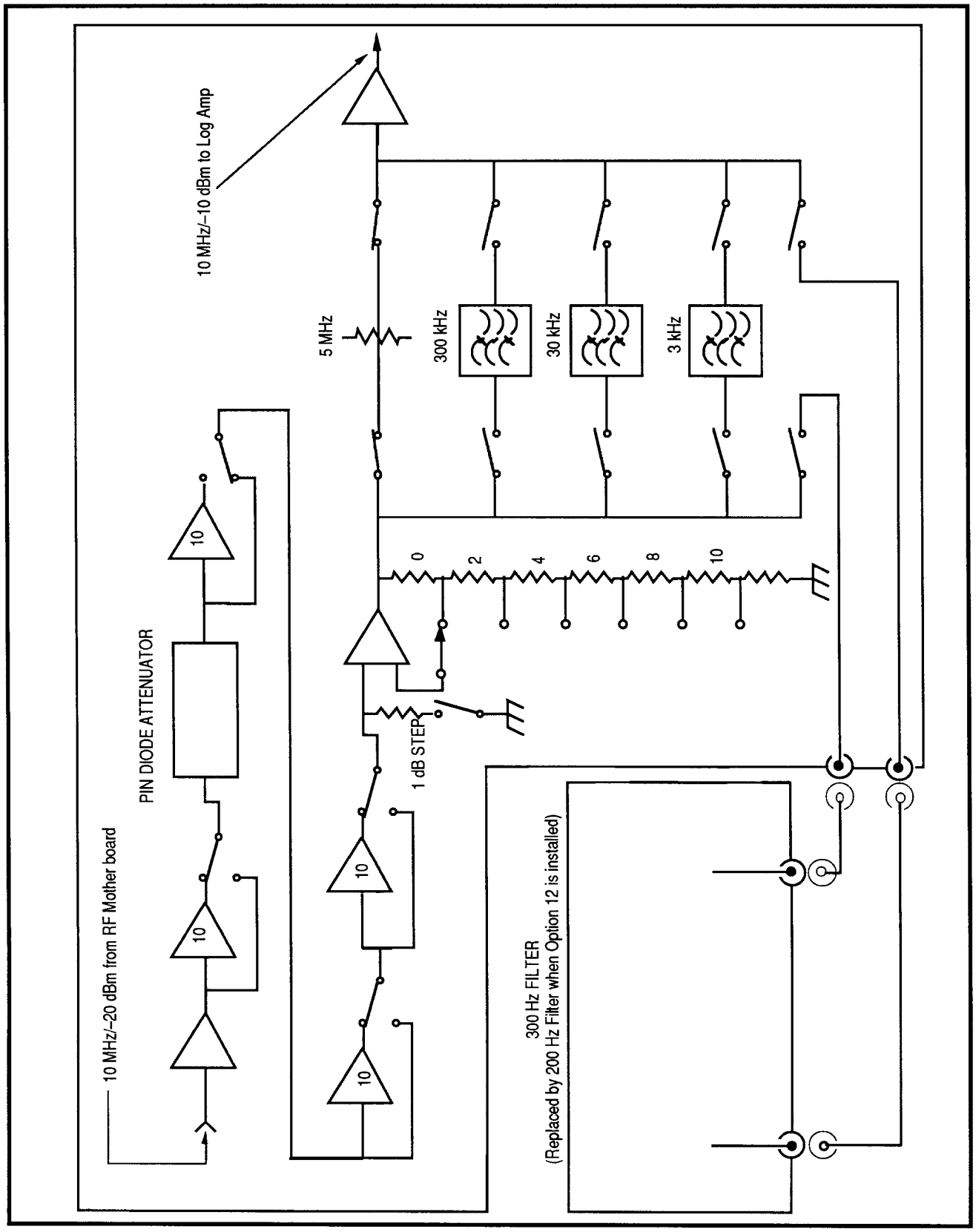

Figure 7-16. Variable Resolution Module block diagram.

300 Hz BANDPASS FILTER S6 C

(2712 ONLY)

The 300 Hz Resolution Filter may be installed in all non-Option 14 instruments. The board is configurable as a single 300 Hz filter. See Figure 7-17.

The board consists of an amplifier and band-pass filter combination.

In Option 14 instruments, the 300 Hz Resolution Filter board is not installed, because the Option 14 board also contains a 300 Hz filter.

The control of the board by the microprocessor is through one 8-bit shift register. Data is shifted in a one 8-bit word.

A resistor is installed between pin 7 of shift register U641 and the base of Q443 to complete a path for an identification bit for the Microprocessor.

The gain stage used is a transformer feedback stage that provides approximately 11.5 dB of gain. The impedance match at one port of the gain stage is highly sensitive to a proper termination being presented to the other port.

The bandwidth filter is composed of a double-tuned circuit (a two-pole Butterworth filter section), an amplifier to provide gain correction and isolation, and another double tuned circuit. Having a filter ahead of the gain stage minimizes the impact of the amplifier's intermodulation performance. Also, placing a filter of equal bandwidth after the gain stage reduces the noise power generated by the stage.

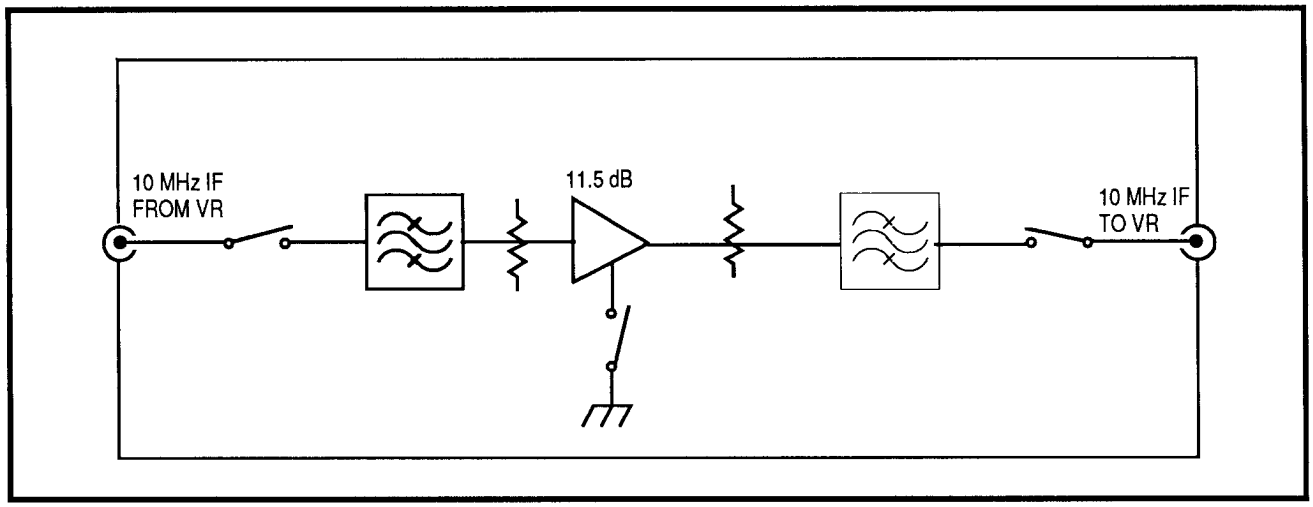

Figure 7-17. 300 Hz Band-pass Filter module. (2712 only)

RF OPTIONS S6 d

(2712 Only)

The RF Options is a system of filters and detectors that enhance the measurement capability of the overall instrument. The board is configurable as a set of additional filters (Option 14) and a 300 Hz filter. See Figure 7-18.

The board provides the resolution bandwidths used to "fill in" resolution bandwidth filters. The board consists of an amplifier and band-pass filter combination whose bandwidth is variable over four decades in discrete steps. The bandwidth range is 1 MHz to 1 kHz. These resolution bandwidths compliment the bandwidths already in place giving the user enhanced measurement capability.

Control System Interface

The control of the RF Options by the microprocessor is through a one 8 bit shift register. Data is shifted in one 8 bit word.

Bandwidth Control

The variable bandwidth section consists of a switching tree to select one of five filters. Available bandwidth filters, in addition to those already in place in the Variable Resolution module, are:

- Option 14: 1 MHz, 100 kHz, 10 kHz, 1 kHz
- Option 14 & Option 01: 1 MHz, 100 kHz, 10 kHz, 1 kHz, 300 Hz.

Identification Bit

A resistor is installed between either pin 12 (d6) or pin 13 (d5) of shift register U390 and the base of Q396 to complete a path for an identification bit for the Microprocessor. This allows the Microprocessor to determine which option is installed on the RF Options board.

Gain Stage – The gain stage used is a transformer feedback stage that provides approximately 11.5 dB of gain. In the case of the 100 kHz filter, two gain stages are used. The impedance match at one port of the Gain Stage is highly sensitive to a proper termination being presented to the other port.

Routing Switches – The routing switches are used to route RF signals to the selected bandwidth filter. They are composed of a transistor in heavy saturation that has the characteristic of relatively large charge storage. The topology used is a shunt series configuration. These switches are used on both the input and output of each filter. That is, the filters are switched in and out at both the input and the output so that when a filter is not being used it is effectively out of the circuit.

All of the bandwidth filters are composed of a double-tuned circuit (a two-pole Butterworth filter section), an amplifier to provide gain correction and isolation, and another double-tuned circuit. By having the filter in front of the gain stage, the intermodulation performance of the amplifier is less important than it would be had the amplifier been placed in front of the filter. Also, by placing a filter of equal bandwidth after the gain stage, the noise power generated by the stage is reduced.

Diagnostics

The identification bit can provide useful information on the proper configuration of the instrument.

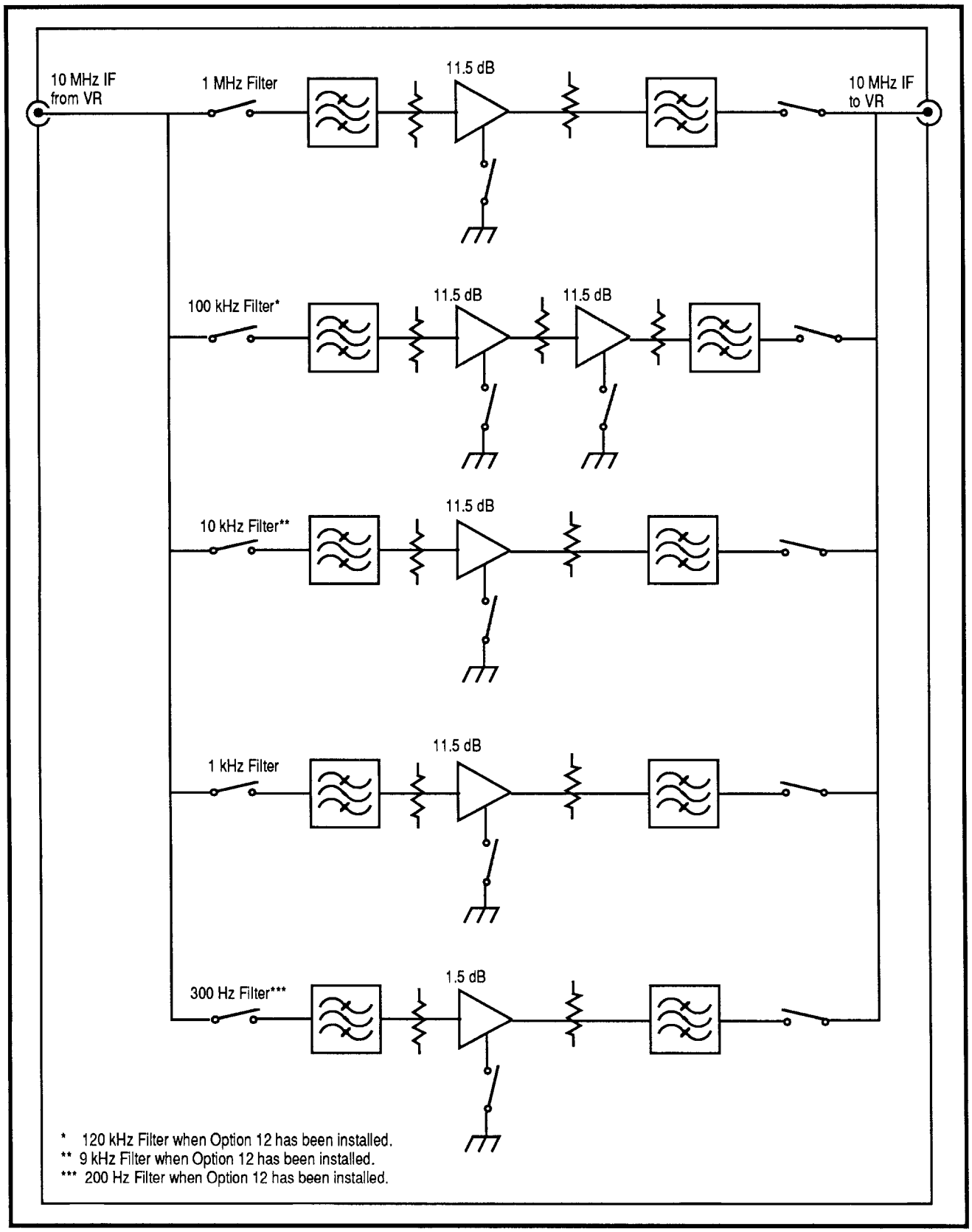

Figure 7–18. RF Options block diagram.
(2712 only)

LOG AMPLIFIER S8 a & S8 b

INTRODUCTION

The Log Amplifier system is a high-performance intermediate amplifier system that provides display laws of linear detection and logarithmic detection of the incoming signal. The log display has scale factors of 10 dB/div, 5 dB/div, and 1 dB/div. The linear mode has the ability to magnify the top portion of the waveform to enhance the measurement capability. The module also contains an FM detector, which, when used with the built-in audio amplifier, can be used to monitor the modulated input signal for enhanced signal identification. The audio amplifier can also be used to monitor the output of the displayed waveform regardless of the video source. There is an alternate audio input for the push button clicks generated by the system controller. This audio signal is also used for the vertical amplitude reference, to check the sweep speed, and for internal triggers. An amplitude-limited output is available for the period counter for determining the actual frequency of the signal present in the IF system. External video inputs are provided for the use of external detectors and the rear panel. A provision is made for clamping the display when the 1st LO is tuned out of band. Frequency dependent amplitude (flatness) correction is also performed on this board.

HARDWARE

The Log Amplifier system is configured by using a 4.5"-by-8.75" circuit board mounted in the card cage. The Microprocessor interface is through three 8-bit shift registers.

FLATNESS ERROR CORRECTION

The signal level at the Log Amplifier board (J190) for full-screen deflection is –10 dBm. The first stage of the Log Amplifier is an amplifier that provides gain between 18 dB and 24 dB, depending on the frequency of the 1st LO. The amplifier is adjusted such that the gain is 18 dB at low frequencies and is up to 24 dB at the high end of the frequency range, because the frequency-dependent amplitude error is always greater at the higher frequencies. The feedback is adjusted by changing the amount of current flowing through PIN diodes CR290 or CR291. The correction voltage, SWSLOPE, reflects the frequency of the 1st LO. Provision for a second correction voltage from a future Digital Signal Processing module is included. This second correction voltage, which provides an interpolated voltage, will be derived from a flatness table. At present, only SWPSLOPE is used.

NOISE FILTER

The output of the first stage, a gain slope amplifier, is then fed to a two-pole noise filter to limit the noise to 5 MHz and to provide two more poles of 5 MHz bandwidth resolution filtering. The output of this filter is then sent to the log stages through a set of jumpers so the signal can be broken for calibration purposes and buffer amplifier Q170 (in a common base configuration) to form an auxiliary IF output.

LOGARITHMIC AMPLIFIER STAGES

The core of the logging stage is a pair of AD640s. The AD640 uses five cascaded limiting amplifiers to approximate a logarithmic response to an input signal of wide dynamic range and wide bandwidth. It is a complete, robust subsystem, based on fundamental design principles employing precision analog circuit techniques to ensure scaling accuracy over wide variations in supply voltage and temperature. The two AD640s are used in a parallel/summing operation. The input signal to one AD640 is amplified by 25 dB with the CLC501. This is a current feedback operational amplifier that has a clamping circuit used to limit the output to a value set by an external voltage divider. The other AD640 is fed through a 25 dB attenuator. The difference in input amplitude for small signals is then 50 dB. There is not enough gain in the 75 dB path to cause the AD640 to limit on the input noise of the CLC501. Thus, the full dynamic range of both parts is realized. This topology eliminates the need for a narrow-bandwidth noise filter.

SYNCHRONOUS DETECTOR

In Lin mode, the signal envelope is extracted from the RF carrier by the use of a synchronous detector. This detector is basically a multiplier. Detection is accomplished by feeding a limited signal into one input and a sample of the RF signal into the other. Since the limited input is always considered equal to plus or minus one unit, only the polarity is important. The sample RF is then multiplied by plus or minus one. Since the RF is always in phase with the limited input, the product is always positive. Thus, demodulation is achieved.

RIPPLE FILTER

The ripple filter is a six-pole elliptic filter with a finite transmission zero at the 10 MHz IF frequency and another at approximately 19 MHz. The purpose is to remove any of the

remaining 10 MHz component that may still exist. Because of the full-wave rectification provided by the synchronous detector and the log cells, the 10 MHz component is attenuated by approximately 30 dB. This greatly reduces the requirements of the ripple filter. However, the signal is not always at 10 MHz. The widest bandwidth is 5 MHz, so there is still a significant requirement for ripple reduction as low as 5 MHz.

QUASI-PEAK DETECTOR CIRCUITS

Introduction

Quasi-Peak is the level of a measured signal with pulse weighting in accordance with CISPR Publication 3 or 1. This level is neither a peak nor an average value of the measured signal, but rather a value between peak and average. See Figure 7-19. The intent is to simulate a receiver and taut band meter indicator system.

A characteristic of the receiver and meter system is that it reacts quickly to stimulus and rather sluggishly when the stimulus is removed. Consequently, the quasi-peak detector in the spectrum analyzer must have a very short rise time compared to the fall time.

The time constant of a mechanical meter has influenced the design of pulse weighting (in accordance with CISPR). The meter is simulated by a network with a comparable time constant. As a result, the analog response of the detected pulse approximately corresponds to that of a mechanical meter. That is, if you were to place a receiver and meter system side-by-side with a quasi-peak detecting spectrum analyzer, the analog responses would be identical.

Because of this meter-related charging and discharging time constants of the weighting circuit, settling time must be allowed for every new frequency and level setting before a valid test result can be obtained.

Description

The quasi-peak detector circuit consists of the precision rectifier formed by U300B and CR300. Capacitor C200 is charged and discharged through a network of resistors that are switched in and out according to the required time constants. The operation of the Quasi-Peak Detector is described in CISPR Publication 16. Operation of the quasi-peak detector is used in three specific frequency ranges (Bands A, B, and C & D) that require a correspondingly different charge and discharge times. A conventional quasi-peak detector operates directly on the IF signal. This quasi-peak detector operates on the envelope of the detected input signal and, if left uncorrected, produces an appreciable error with respect to the conventional quasi-peak detector. The corrections are in the form of a simulated inductor in series with the charge capacitor (C200). This inductor is formed by U300A, R400, R401, the analog switches U400A and U400B, and capacitors C400 through C404. The final topology of this circuit uses floating-charge capacitor C200. The voltage across the floating capacitor is amplified by the amplifier consisting of U300A, U100A, and U201A. The signal is then fed through a low-pass filter that simulates the ballistics of a meter movement of the type first used on commercial EMI receivers. The bandwidth and, therefore, rise time of the meter simulator filter is changed depending on the frequency being observed.

Since the quasi-peak detector operates on the output of the linear detector, a DC logarithmic amplifier is provided so that the measured results can be converted back to LOG. This is desirable since most EMI measurements are made with dBμV as the display unit. The DC logarithmic amplifier is designed around the MAT-04 die with Q220A and Q220B used as the logging device. The temperature-dependent gain error term is reduced by the die temperature stabilization circuit consisting of Q220B as a thermometer and Q220D as a heater. Lastly, any remaining temperature gain error term will be 0 at the top of screen as the reference current is adjusted to that of a full-screen signal.

VIDEO FILTER/SCALE FACTOR

After the Ripple Filter, the signal is offset before being amplified to bring the equivalent of a full-screen signal in log mode or linear mode to correspond to 0 V output. The out-of-band clamp is also done at this time to deflect the CRT beam into the bottom of the screen when the display is outside the frequency limits of the spectrum analyzer. Next, the video filter selector is chosen. The bandwidth of the vertical chain is approximately 5 MHz. Therefore, when a video filter path is chosen, the maximum bandwidth drops to approximately 1 MHz. This switching tree also multiplexes in the external signals from the rear panel or the FM Detector. Immediately following the Video Filters is the Scale Factor amplifier. The gain of the Scale Factor amplifier can be set to 1.1, 2.2, 5.5, or 11 corresponding to 10 dB/div, 5 dB/div, 2 dB/div, or 1 dB/div. The linear function is done with the gain set to 1.1.

FM DETECTOR

The AD834 (U350) is a four-quadrant multiplier that is used as a quadrature detector for demodulation of FM signals. The audio output is sent to the audio amplifier selector and to the video input selector.

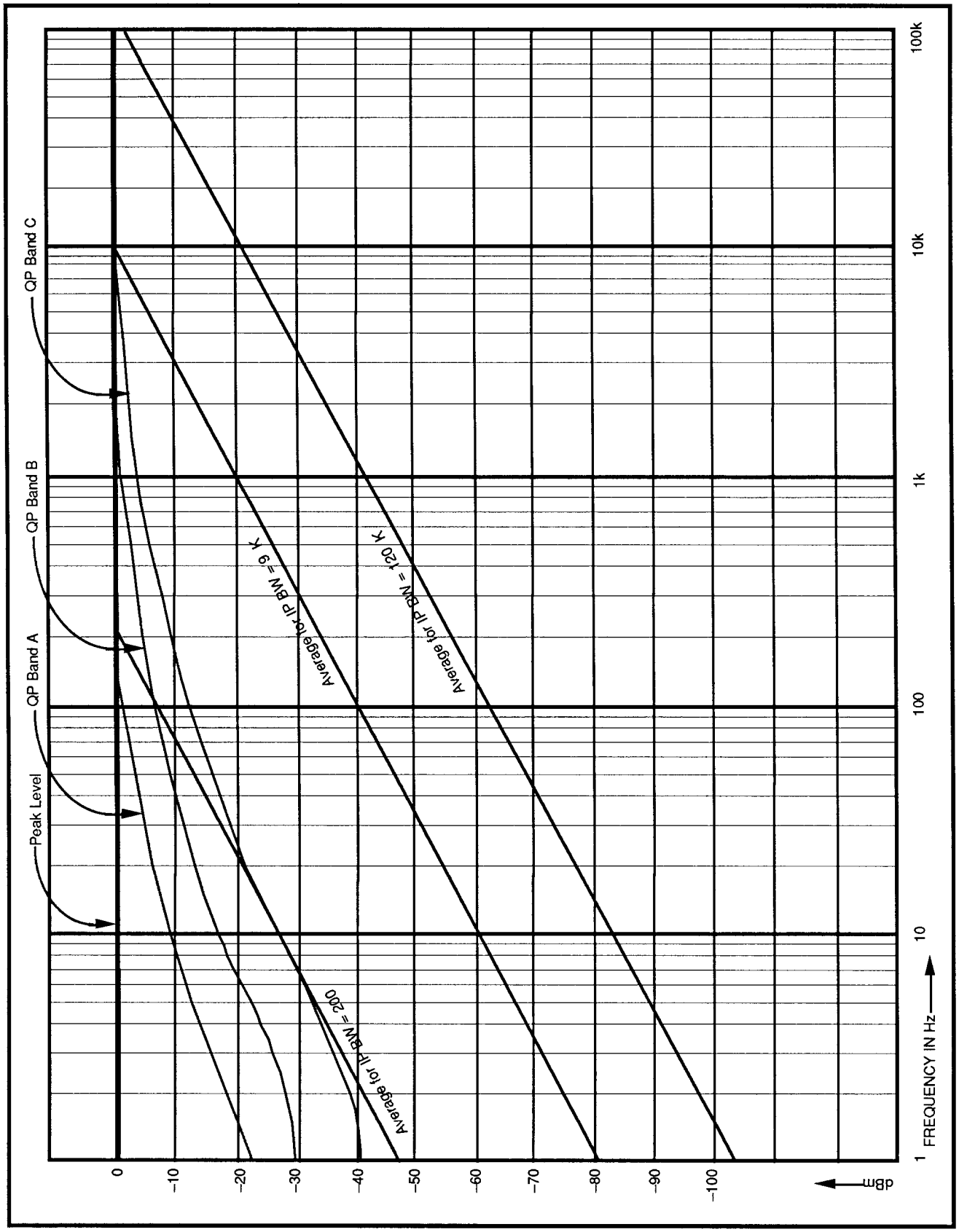

Figure 7-19. CISPR-type filter responses.

PERIOD COUNTER SIGNAL

The limited output of one of the log cells is used to drive an isolation buffer (U630A). This signal is used to drive the period counter on the Microprocessor board for frequency measurements.

AUDIO AMPLIFIER

The TDA1013A is used as the audio amplifier for monitoring purposes, and as a means of providing feedback to the user from the Microprocessor.

VIDEO AMPLITUDE CALIBRATOR

Microprocessor audio appearing at pin 22 of J7 is used to provide feedback to the operator for push button clicks and out-of-range or uncalibrated conditions. This signal is also used to provide a signal for calibrating the video amplifier and display storage. The sweep triggers are also tested by this signal.

SYSTEM RESET

At power-up, the system reset line SYSRST– on pin 4 of J7 goes low until the Microprocessor resets it. During this time, the control latche's output enable line is held false and the outputs are in a high-impedance state. This has no useful effect except to the mute bit. The pull-up resistor will force a mute condition during this time, thus disallowing any extraneous noise from the speaker.

DISPLAY STORAGE S9 a & S9 b

Only the vertical information is digitized, since the horizontal sweep is a linear function and thus can be predicted. The Horizontal Display is broken up into 512 discrete locations or "bins". The only data that need be recorded from the sweep is: 1) when a bin boundary is crossed and 2) which bin the sweep is currently in.

The Display Storage consists of four sections. These are the Vertical Acquisition, Horizontal Acquisition, Memory and I/O Arbiter, and the Display consisting of the Readout and the Vector Control.

Horizontal Acquisition

The horizontal acquisition system consists of a tracking analog-to-digital converter (ADC). The type of ADC converter used ensures that all values of the sweep are digitized and facilitates the detection of when a bin boundary is crossed. When a bin boundary is crossed, all of the vertical information that has been acquired since the previous bin boundary crossing is then stored in memory. The bin boundary signal is called STORE–.

The tracking converter is made up of operational amplifier U392; comparators U292A and U292B; state machine U464; up/down counters U246, U242, and U236; digital-to-analog converter (DAC) U574; and some random logic.

Operation of the tracking converter starts with the sweep. The sweep is negative-going +1.6 V to –1.6 V. The operational amplifier buffers and inverts the sweep. The voltage appearing on the output then determines the voltage at the window comparator. The digital value in the DAC is such that the voltage appearing in the window comparator is always within the window. When the voltage is outside of the window, the state machine will clock the up/down counters up or down, as appropriate, until the system reaches equilibrium.

The state machine controls the operation of the horizontal tracking ADC. When the UP– line is asserted (in the logic low condition), the next positive edge of the clock sets the output of a J-K flip-flop, which enables the Up-Clock to the up/down counters. These counters will count up until HA9 and HA10 reach a 0 state, except when the NOISE line is false (logic low), in which case the counter will count up until HA0, HA9, and HA10 are in a zero state. The DN line causes a similar sequence of events, except the counter is counted down. During the time that the counter is enabled, the STORE– line will go low if the STEN line is high and initiate a write cycle to the Memory. U488, U566A, and U324D prevent the up/down counters from overflowing and underflowing.

Horizontal Multiplexer

When the STORE– line is low, buffers U452 and U446 are enabled. The Horizontal Acquisition address is then placed on the address bus. At this time, the data in MAX accumulator

or MIN accumulator is loaded into memory. During a write cycle, all four display partitions are written sequentially. If one of the displays has been saved, the write cycle is completed but the actual write enable signal is inhibited for that display during this period. If the NOISE line was low, then both a MIN and a MAX is written (eight clock cycles) into two adjacent storage locations. If the NOISE line is high, then just a MAX is written into one memory location (four clock cycles).

The arbitration for the memory and the enabling of the display writes (Save A, B, C, D) is done by programmable logic sequencer (PLS) U360. This PLS is the RAM arbiter. Internal to the RAM arbiter are registers that control the display updates, when written to by the microprocessor.

Vertical Acquisition

The flash ADC U368 provides new data at VA0-VA7 soon after the rising edge of CLK (clock). This data is an accurate digital representation, within limits, of the analog video signal. Multiplexers U206 and U108 select the ADC data or, during the max hold cycle, the output of the memory. The outputs of the multiplexers are compared by U114 against the MAX accumulator, and the outputs of the ADC are compared by U304 against the MIN accumulator. State machine U318 determines the appropriate time to update (flush) the MIN and MAX accumulators with the present acquired data (VA0-VA7). The accumulators are flushed at the end of a write cycle, when the comparators determine that the data in the accumulator is either greater than (MAX) or less than (MIN) the present acquired data, or at the end of a read accumulator cycle. Another pair of multiplexers, U220 and U226, select the output of the MIN or MAX accumulator to be written into memory. Max hold and the read accumulator command will force these multiplexers to only select the contents of the MAX accumulator to be written into memory. The contents of the MIN accumulator are selected only when MIN MAX pairs are written into memory.

Display Control

The active display is controlled by a state machine composed of U260 and one half of a pair of ripple counters, U326A. Eight registers in the state machine retain the active displays when written to by the Microprocessor. Up to four vector display pages and four pages of text can be active at any one time, although having more than one page of text active at one time can be confusing. The current active display is depicted by PA0, PA1, and PA2 originating from the counter. When a page of information is completed, a trailing edge detector inside U260 asserts NEWP– (low) and toggles the counter, thus selecting the next page. If the next page is inactive, NEWP– will toggle again until an active page is selected.

Vertical Display Control

A state machine in U200 controls the display of vector waveforms, the readout, and the timing for the Display-A function. Each vector is eight clock periods or 3.25 μs long with a 2.46 MHz clock.

Readout

A state machine in U146, in conjunction with character generator chip U130 and some peripheral logic, controls the display of the readout characters. Counters U240 and U140 are used for both the display of vectors and the generation of a vertical positioning ramp for the readout. When in the vector mode, the counters are merely preset but not clocked; when in the character mode, the counters are counted but not preset. Exclusive-OR gates U154A, U154B, and U154C invert the ramp when the characters are displayed (because the readout IC displays the characters from top to bottom). The contents of scroll register U160 are added to the displayed row by 4-bit adder U270. U280 and U180 are display DACs. During a readout page, only one display DAC (U280) is used, and during a vector display, both display DACs are used.

Vector Display

Displayed data is loaded into display latch U170 for the MIN vectors, and into latches U240 and U140 for the MAX vectors. The vector is drawn by loading new data into one of the two DACs and then linearly turning on the reference voltage. As reference current in one DAC is increased, the other DAC current is decreased, thus drawing a linear vector between each display point.

Display –A

Vector controller U208 loads the "A" information into tri-stateable, inverting latch U120. If a Display-A is not to be completed, then the inverting latch is held cleared. The "D" inputs to the latch are inverted so that the data appearing at the output is the "ones" complement of the input data. The output of the latch is then added with the I/O data by adders U232 and U132. The result is the I/O data minus the "A" data, less the end-around carry. Since the output is ultimately visual, the end-around carry was not performed, thus providing a 1-bit error. Also, no overflow or underflow blanking is performed.

MICROPROCESSOR S10 a & S10 b

The Microprocessor board is the central processing section of the instrument. It is used to control all instrument functions including frequency control, implementation of the human interface, and external port communication through the GPIB or RS-232C board. The Microprocessor contains the following circuit blocks (Figure 7-20):

- Microprocessor (CPU)
- Clock Generator
- Interrupt Controller
- Input/Output (I/O) Subsystem Interface
- Memory (RAM & ROM)
- Software Option Jumpers
- Programmable Interval Timer
- Counter System (Figure 7-21)

MICROPROCESSOR (CPU)

The Microprocessor (CPU) is based on an 8 MHz NEC µPD70108 (V20).

The V20 is configured in the minimum mode (pin 36 connected to Vcc) using a demultiplexed bus. In the demultiplexed bus configuration, the address bits (AD0 through AD7 and A8 through A19) are presented to the address latches (U440, U450, U465), and the falling edge of ALE (pin 28 of U250) latches the address lines. Approximately one clock cycle later, the data lines (AD0 through AD7) become active for either a read or write operation. (Notice that the AD0 through AD7 lines provide both the low order eight bits of address and the eight bits of data.) The DIR signal (pin 30 of U250) determines the direction of data flow on the data lines. This signal is used to set the direction of the bi-directional data buffer (U460).

Once the address lines have been latched, they are decoded using the Programmable Logic Devices (PLDs) U515 and U530, and the 4-to-16 line decoder, U585. The outputs of these PLDs are used to enable the various peripheral sections of the board.

CLOCK GENERATOR

The Clock Generator chip (U360) is a NEC µPD71011. The purpose of this IC is to both generate the clock for the Microprocessor board and synchronize the insertion of wait states into the CPU.

The Clock Generator part of the IC uses a 14.7456 MHz crystal (parallel resonant) to generate the 7.3728 MHz CPU clock (14.7456 MHz ÷ 2). In addition to the CPU clock output, there is an oscillator clock output that is divided by six (÷6) using three flip-flops (U240). The output of this ÷6 (2.4576 MHz) is used to drive the Display Storage and GPIB or RS-232C board state machines.

The wait state synchronization part of U360 is not used but is replaced by a flip-flop (U260A). Timing errors between wait state generator on the GPIB or RS-232 board and the CPU are eliminated by synchronizing the RDY signal (pin 25 of U250). Since the CPU allows the RDY line to go low asynchronously, relative to the CLK88 signal, U260A is cleared as soon as the BWAIT– signal goes low. After the BWAIT– signal goes high, the RDY signal is synchronized, through U260A, using the CLK88 signal. This prevents any timing problems regarding the generation of wait states.

INTERRUPT CONTROLLER

The Interrupt Controller (U340) is based on the NEC µPD71059 (Intel 82C59). The purpose of the Interrupt Controller is to synchronize and set up priority for up to eight system interrupts. A high level on any of the IR0 through IR7 inputs of the Interrupt Controller causes the INT output (pin 17 of U340) to become high. After the CPU recognizes the interrupt on the INTR input (pin 20 of U250), it pulls the INTA output (pin 27 of U250) low, telling the Interrupt Controller that the CPU is ready to accept the interrupt data. The Interrupt Controller then disables the data buffer outputs (U460), through XDEN- on pin 20 of U530, and presents the interrupt data on the data bus during the second low pulse on the INTA signal from the CPU.

The interrupt inputs to the Interrupt Controller are configured as shown in Table 7-2. The priority is determined by both the settings of the internal registers of the Interrupt Controller and the interrupt input number (IR0 has highest priority by default).

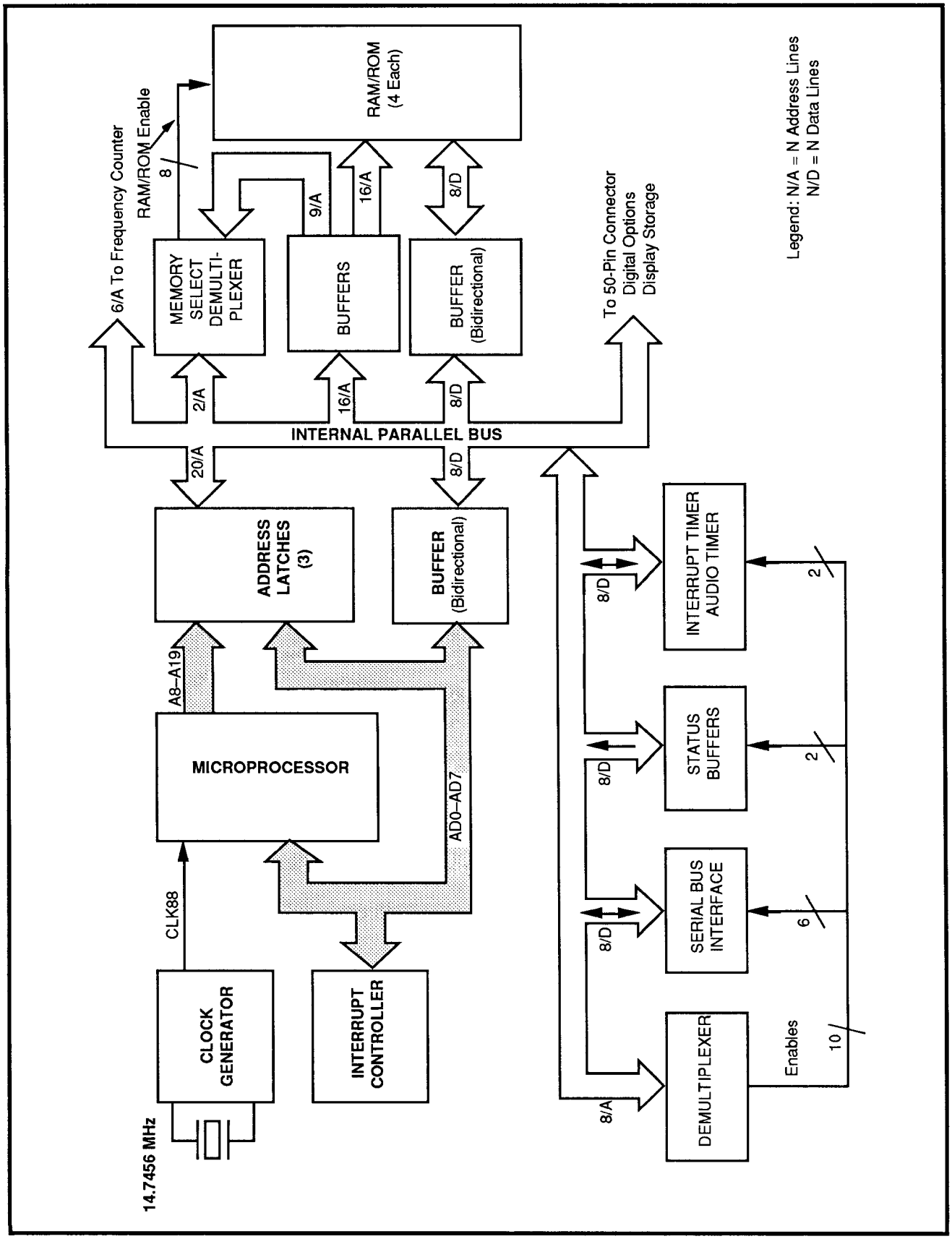

Figure 7–20. Microprocessor kernel.

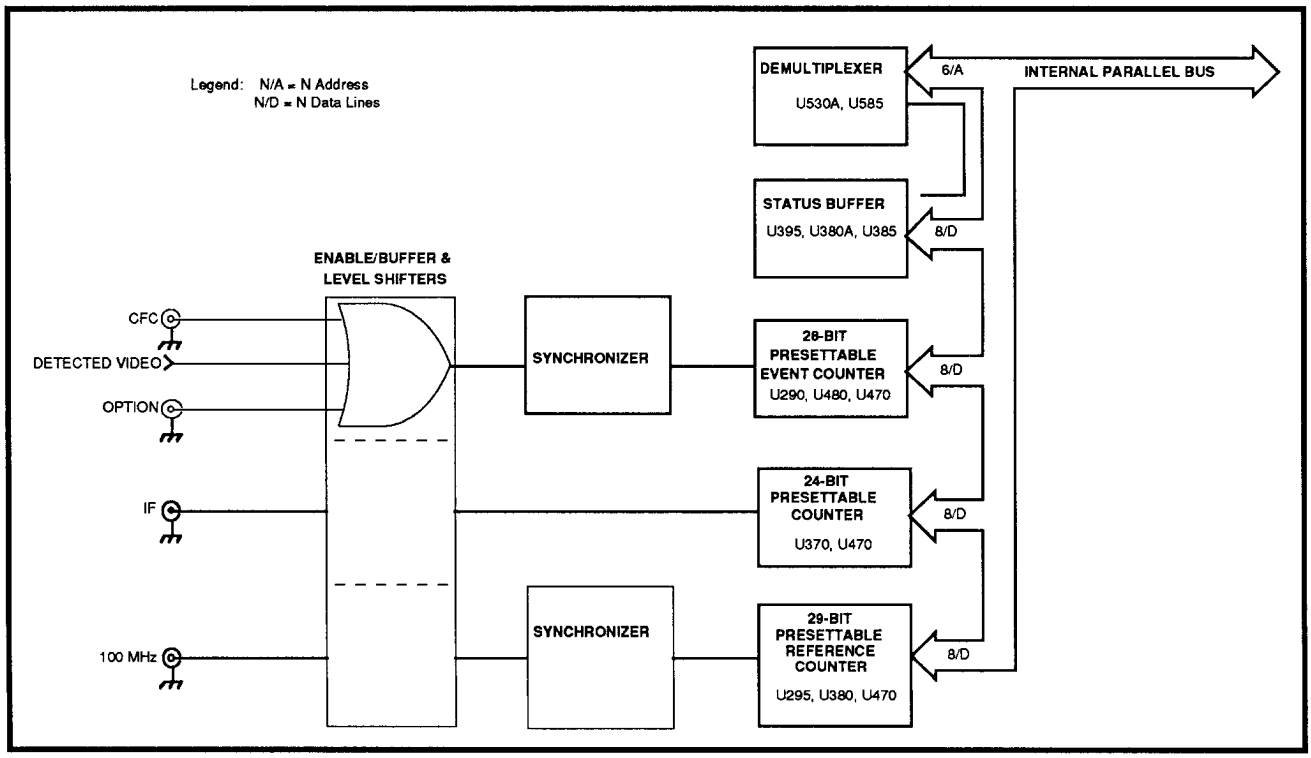

Figure 7–21. Microprocessor counter system.

Table 7-2
INTERRUPT CONTROLLER INPUT CONNECTIONS

Interrupt Number	System Connection
IR0	Programmable Interval Timer 0
IR1	I/O Subsystem Interrupt
IR2	End of Sweep Interrupt
IR3	Frequency Counter Done Interrupt
IR4	Digital Options Board
IR5	Digital Options Board
IR6	Digital Options Board
IR7	Programmable Interval Timer 1

See the NEC µPD71059 (or Intel 82C59) data sheets for more detailed information on the operation and programming of the Interrupt Controller.

I/O SUBSYSTEM INTERFACE

The I/O Subsystem performs the serial communication between the CPU and other modules in the instrument, controls the Interval Timers, and triggers single sweeps.

The signal SSTRIG (pin 5 of U495) is used to trigger the single sweep mode of the instrument. This signal is selected by writing a one to the second LSB of the I/O Subsystem Control Register.

The I/O Subsystem Control Register is also used to control some parts of the Interval Timer (U580). The signal, GATE_0 (pin 6 of U495), is used to enable Timer 0 of the Interval Timer depending on how the counter is set up.

The signal AUDEN is used to enable Timer 2 of the Interval Timer. This timer's output is a square wave, UPAUD, which is used by the Log board to generate the audio-feedback tones that are heard on the speaker.

The serial bus is used by the CPU to communicate with several of the modules in the instrument. The serial bus is based on either a three-wire or seven-wire system. The three-wire system is used for modules that only listen (are written to), while the seven-wire system is used for modules that must both talk and listen.

Writing to a module begins by latching one bit of data into the Q0 register of U495 and generating a strobe on the XCLKO– signal. The strobe is generated by writing the correct address to U585. The XCLKO– output (pin 16 of U585) then goes low

for two clock cycles of the CPU (the length of the WR– pulse). This strobe is used as a shifting clock to load a single bit into a shift register on all modules (connected to the DATAO signal).

After all of the data for the intended module has been sent, a 4-bit address, ADO0 through ADO3, is latched into U495 registers Q4 through Q7. This 4-bit address is decoded by U590 on the Power Supply Secondaries and becomes the latch pulse for the intended module latches. The latch pulse is generated by the LOAD– signal (pin 13 of U585) and is two CPU clock cycles long. All modules must have a pull-up resistor on the incoming latch signal in order to guarantee correct logic levels.

Reading from a module begins with the module requesting service through its active low request signal (FPREQ– for the front panel, ...). This signal goes into a priority encoder (U780) on the Power Supply Secondaries, then pulls the Microprocessor board Interrupt Handler, IRQ1, high. The outputs of the priority encoder are then used to acknowledge the request for service that activates the output buffers on the module requesting service. At the same time, the outputs of the priority encoder, ADI0 through ADI2, are fed into the I/O Subsystem status register, U595. This status register is then read, due to the interrupt, and the address of the module requesting service is determined from the ADI0 through ADI2 lines. Now the process of reading in the data from the module requesting service can begin.

The lowest bit of the I/O Subsystem status register contains the data from the module to be read. After each CLKO– signal, the status register is read and the data is linked together in a series until all data has been received. The CLKO– signal is generated the same way as the CLKI– signal described earlier.

MEMORY

The memory on the Microprocessor Board consists of two sections, 128 kilobytes (16 X 8 kilobytes) of Random Access Memory (RAM), and up to 524 kilobytes (64 X 8 kilobytes) of Read Only Memory (ROM). The RAM is used for CPU processing and data space, while the ROM contains all of the system firmware.

Access to the RAM, for either reading or writing, consists of sending out the address for the byte to be accessed. This address is decoded by U515, and the appropriate enable line pulled low to select the memory device that is to be accessed.

Access to the ROM (read only) is performed in the same way as the RAM.

Jumpers (and wires for a more permanent method) are provided on the Microprocessor board for selecting the size of EPROM and RAM memory chips used. Table 7-3 shows the configuration of jumpers/wires for various size memory ICs.

Table 7-3
CONFIGURATION OF JUMPERS/WIRES FOR VARIOUS MEMORY IC SIZES

MEMORY SIZE	JUMPERS/WIRES TO INSTALL		
27256	W525A	W518B	
27512	W525A	W518A	W522
27010	W525A	W518A	
27020	W525B	W518A	
43256	W526A		
4364	W526B		

Allowances have been made for on-board programming of the EPROM devices. On-board Programming is done by removing J528 (and/or W528) and then supplying the appropriate timing and voltage signals to program the EPROMs through connector J550.

SOFTWARE OPTION JUMPERS

There are two jumpers (1 K Ω resistors) on the I/O Subsystem Status Register which can be used by the CPU to set various software options. These jumpers select the options shown in Table 7-4.

Table 7-4
DEFINITIONS OF THE SOFTWARE JUMPERS

Jumper Status	Definition
SW0 = 0	Do Not print debug messages
SW0 = 1	Print debug messages
SW1 = 0	Old Counter Amplifier
SW1 = 1	New Counter Amplifier

When SW0 is set to 1 (+5 V), all the debug messages will be printed on the screen. This will greatly increase the amount of time the instrument takes to complete the power-up sequences.

PROGRAMMABLE INTERVAL TIMER

The programmable interval timer (U580) is a NEC μPD71054 (Intel 82C54). It contains three programmable timers that are used for various functions by the CPU. The signal GATE_0,

from the I/O Subsystem Control Register is used to enable (GATE_0 = 1) or disable (GATE_0 = 0) timers zero and one. The signal AUDEN is used to enable (AUDEN = 1) or disable (AUDEN = 0) timer two. The signal CLK88 (7.3728 MHz) is fed into timer one. The output of timer 1 is then fed into both timers zero and two. The output of timer zero is then fed into IR0 of the Interrupt Controller. The output of timer two goes to the Log Board to generate the audio tones.

For programming details, see the NEC µPD71054 or Intel 82C54 data sheets.

FREQUENCY COUNTER SYSTEM

The Frequency Counter System consists of buffer amplifiers and three counters. The three counters are an event counter (28 bits long), the reference/period counter (29 bits long), and the IF counter (24 bits long).

The event counter consists of devices U290, U480, and counter zero in U470. The event counter is fed from one of three ports: CFC, DETVID, or OPTION. These inputs range in frequency from 1 Hz to 40 MHz. The input is selected by writing the appropriate bits in the Frequency Control Register.

The reference/period counter consists of devices U295, U380, and counter one of U470. The reference counter is fed from the 100 MHz Reference Oscillator.

The IF counter consists of devices U370 and counter two of U470. The IF counter is fed from the IF input and ranges in frequency from 5 MHz to 15 MHz.

The Frequency Counter Control Register (U385) contains all of the signals necessary to run and control the Frequency Counters. The following are descriptions for each of the signals:

- The TMRGATE signal (bit zero) is used to enable all of the counters in U470. This signal is active (1) when ever counting is being performed.
- The CTR100MH signal is used to enable the 100 MHz buffer amplifier in the Frequency Counter Buffer Amplifier section.
- The CLOAD– signal is used to load the counters U370, U380, and U480, with the data present at the data inputs. This allows the counters to be set to any starting point.
- The RESET signal is used to set the counting flip-flops (U195) to a known value.
- The VID_EN, IF_EN, CFC_EN, and OPT_EN enable the detect video, IF, CFC, and optional input buffer amplifiers, respectively.

The Buffer Amplifier section consists of an ECL differential line receiver for each input. The non-inverting input of each receiver is connected to the signal input, while the inverting input is connected to a control signal. The control signals from the Frequency Counter Control Register are fed into PNP transistors that act as saturated switches. These switches are then used to enable or disable the associated receiver. Immediately following the first receiver is a second receiver to help buffer the signal. The output of the second receiver is fed into a level-shifting transistor that sets the output TTL levels.

On the 100 MHz input, prior to ECL-to-TTL translation, a ECL flip-flop (U195) is used to synchronize and divide the signal by two.

HARDWARE INTERFACE

The Microprocessor requires several signals. A brief description of these signals, by connector, is given in Tables 7-5 through 7-7.

Table 7-5
POWER SUPPLY AND SERIAL BUS CONNECTOR (J10) SIGNAL NAMES AND DEFINITIONS

Signal Name	Description	Source Module
DETVID	Detected Video: The demodulated AM or FM signal from the Log Board	Log Board
SWPGATE	Sweep Gate (TTL): Signal that is active during the sweep	Display Storage
POK	Power OK: Tells CPU that the +5 V supply is OK	Power Supply Secondaries
REQI–	Request Interrupt (TTL): I/O Subsystem request for service	Power Supply Secondaries
UPAUD	Microprocessor Audio: Square-wave output at frequency of the audio tone	Microprocessor
CLKI–	Clock In (TTL): Microprocessor Serial bus input clock	Microprocessor
CLKO	Clock Out (TTL): Serial bus output clock	Microprocessor
DATAI	Data In (TTL): Serial bus data in	Rear Connector, Tracking Generator, Front Panel, PLCFC, 300 Hz Filter
DATAO	Data Out (TTL): Microprocessor Serial bus data out.	Microprocessor
ACKI–	Acknowledge Interrupt (TTL): Enables priority encoder on Power Supply Secondaries	Microprocessor
LOAD–	Load (TTL): Latches data into receiving module on serial bus	Microprocessor
ADI0 through ADI2	Address In (TTL): Address of module on serial bus requesting service	Power Supply Secondaries
ADO0 through ADO2	Address Out (TTL): Address of receiving module on serial bus	Microprocessor
SSTRIG	Single Sweep Trigger (TTL): Triggers a single sweep on the Sweep board	Microprocessor
+5 V	+5 V: +5 V digital supply	Power Supply

Table 7-6
MICROPROCESSOR INTERFACE CONNECTOR (J550) SIGNAL NAMES AND DEFINITIONS

Signal Name	Description	Source Module
BUSDIS	Bus Disable (TTL): Disables microprocessor address bus and control signals	Display Storage Digital Options
ALE	Address Latch Enable (TTL): Signal used to latch the address lines into the address registers.	Microprocessor
BCLK	Buffered Clock (TTL): Microprocessor crystal oscillator divided by six, ≈2.4576 MHz	Microprocessor
BRD–	Buffered Read (TTL): Microprocessor signal signifying a read cycle	Microprocessor
BWR–	Buffered Write (TTL): Microprocessor signal signifying a write cycle	Microprocessor
BIO/M	Buffered I/O or Memory (TTL): Microprocessor signal used to determine if the read or write cycle is for an I/O device or memory.	Microprocessor
BRST–	Buffered Reset (TTL): Microprocessor reset line	Microprocessor
BWAIT–	Buffered Wait (TTL): Line to Microprocessor used to insert wait states	Display Storage Digital Options
BD0 through BD7	Buffered Data (TTL): Microprocessor bi-directional data lines	Microprocessor Display Storage Digital Options
BA0 through BA19	Buffered Address (TTL): Microprocessor address lines	Microprocessor
BMT–	Boot Memory Test (TTL): Maps an optional ROM on the GPIB or RS-232 board to high address space for diagnostics	Digital Options
IR4	Interrupt 4 (TTL): Interrupt line to the interrupt handler on the Microprocessor board	Digital Options
IR5	Interrupt 5 (TTL): Interrupt line to the interrupt handler on the Microprocessor board	Digital Options
VPROG	Voltage Program: Programming voltage for EPROMs on the Microprocessor board	External Programmer
ROMVCC	ROM Power Supply: Power Supply that is selectable for either programming voltage levels or operating voltage levels	Microprocessor External Programmer
+5 V	+5 V Supply: +5 V supply from Microprocessor (power supply module) to modules connected to J550	Power Supply

Table 7-7
MICROPROCESSOR COUNTER SECTION CONNECTOR SIGNAL NAMES AND DEFINITIONS

Signal Name	Description	Source Module
CFC	Center Frequency (J180): Signal from the CFC board to be counted	Center Frequency Control
OPTION	Optional Input (J185): Signal from an installed option to be counted	Installed Option
IF	IF Input (J190): IF Signal from the Log board to be counted	Log Board
100MHZ	100MHZ Calibrator (J195): Reference Signal from the Reference Oscillator to be counted	Reference Oscillator

CONNECTOR PIN OUTS

Tables 7-8 through 7-11 give the pin out for each connector on the Microprocessor board.

Frequency Counter Connectors

There are four SMB connectors that provide the required signals to the Frequency Counter section of the Microprocessor board. These four connectors are listed below along with the associated input name.

Table 7-8
CONNECTORS AND SIGNAL NAMES FOR THE FREQUENCY COUNTER SECTION

Connector	Signal Name
J180	CFC
J185	OPTION
J190	IF
J195	100MHZ

Power Supply Interface

The Microprocessor board requires only the +5 V supply.

A single 0.1 µF capacitor is placed near the power supply pins for each digital integrated circuit on the board to reduce the noise. In addition there are several 220 µF electrolytic capacitors placed near sections of the board that require a relatively quiet supply.

Table 7-9
PIN OUT FOR THE 24-PIN DIN CONNECTOR (J10) BETWEEN THE MICROPROCESSOR BOARD AND THE POWER SUPPLY INTERCONNECT AND SERIAL I/O

Pin No.	Pin Name
1	DETVID
2	—KEY—
3	SWPGATE
4	POK
5	REQI–
6	UPAUD
7	CLKI–
8	CLKO
9	DATAI
10	DATAO
11	ACKI–
12	LOAD–
13	+5 V
14	+5 V
15	GND
16	GND
17	ADI0
18	ADO0
19	ADI1
20	ADO1
21	ADI2
22	ADO2
23	SSTRIG
24	ADO3

Table 7-10
PIN OUT FOR THE MICROPROCESSOR BOARD TEST CONNECTOR (J150)

Pin No.	Pin Name
1	+5 V
2	A15
3	A16
4	A17
5	A18
6	A19
7	GND
8	GND
9	RD–
10	HOLD–
11	HOLDA
12	WR–
13	IO/M–
14	DIR
15	DEN–
16	GND
17	INTA–
18	GND
19	RDY
20	RST
1B	GND
2B	A14
3B	A13
4B	A12
5B	A11
6B	A10
7B	A9
8B	A8
9B	AD7
10B	AD6
11B	AD5
12B	AD4
13B	AD3
14B	AD2
15B	AD1
16B	AD0
17B	GND
18B	INT
19B	ALE
20B	GND

Table 7-11
PIN OUT FOR THE 50-PIN CONNECTOR (J550) BETWEEN THE MICROPROCESSOR, DISPLAY STORAGE, AND DIGITAL OPTIONS BOARDS

Pin No.	Pin Name
1	GND
2	BPCLK
3	GND
4	BRD–
5	+5 V
6	BWR–
7	+5 V
8	BIO/M–
9	BRST–
10	BWAIT–
11	BD7
12	BA19
13	BD6
14	BA18
15	BD5
16	BA17
17	BD4
18	BA16
19	BD3
20	BA15
21	BD2
22	BA14
23	BD1
24	BA13
25	BD0
26	BA12
27	BMT–
28	BA11
29	BUSDIS–
30	BA10
31	ALE
32	BA9
33	IR4
34	BA8
35	IR5
36	BA7
37	IR6
38	BA6
39	VPROG
40	BA5
41	ROMVCC
42	BA5
43	+5 V
44	BA3
45	+5 V
46	BA2
47	GND
48	BA1
49	GND
50	BA0

GPIB, RS-232, REAL TIME CLOCK, & NVRAM S11 a & S11 b

The Digital Options boards provide GPIB, RS-232 Serial Port (a no-cost option that replaces GPIB), a Real Time Clock, space for optional EPROMs, and Non-Volatile Random Access Memory (NVRAM). See Figure 7-22.

The Interface Hardware, Optional ROM, NVRAM, and Real Time Clock sections are the same on both boards.

The GPIB and RS-232 interfaces allow control of the instrument from an external controller (e.g. for automated testing).

The Real Time Clock, with battery backup, provides date and time stamping of stored information.

The additional NVRAM, 96 kbytes, provides dependable storage for setup parameters, waveforms, etc. Additional sockets are provided for EPROMs, allowing an additional 256 k of instrument software storage. This memory space is used for both current and future software drivers and options.

GPIB

The GPIB circuitry consists of three components. They are the Texas Instruments TMS9914A, General Purpose Interface Bus Controller (a 75160 GPIB octal bus transceiver) and a 75162 GPIB 8-channel transceiver. In addition, there is circuitry included to drive two LEDs. These two LEDs display the status of the Not Ready For Data (NRFD) and Not Data Accepted (NDAC) handshake lines.

The TMS9914A, as well as the 75160 and 75162, meet the IEEE-488 1975/78 standards along with the IEEE-488A 1980 supplement. Access to the TMS9914A is through the Microprocessor address and data buses, where the lower three bits of the address bus (A0 through A2) determine which of the 13 internal registers are to be accessed (six readable, and seven writable).

The TMS9914A is reset at power-up through the BRST– line. The TMS9914A uses the 2.5 MHz clock for internal clocking of functions.

For programming, see the 2712 GPIB Programmers Guide.

RS-232 SERIAL PORT

The RS-232 board, a no-cost option that replaces the GPIB board, provides a RS-232 serial bus, a Real Time Clock, Non-Volatile Random Access Memory (NVRAM), and space for optional EPROMs. Refer to the description prior to GPIB description for the Real Time Clock, NVRAM, and Optional ROM (space for optional EPROMs).

The RS-232 interface allows control of the instrument from an external controller (for example, for automated testing).

The Real Time Clock, with battery back-up, provides date and time stamping as well as alarm operations.

The additional NVRAM, 96 kbytes, provides dependable storage for setup parameters, waveforms, etc. Additional sockets are provided for EPROMs, allowing an additional 256 k of instrument software storage. This memory space will be used for both current and future software drivers and options.

The RS-232 option is composed of two components, an 85C30 (U380) Serial Communications Controller (SCC), and a MAX235 (U280) driver/receiver. In addition, a state machine located in a programmable logic device (U311) is required.

Since the SCC latches data on the falling edge of the write signal, a state machine is used to delay the write signal (the delayed write signal is TTYWR-) and put the Microprocessor into a wait state for a minimum of 400 ns (and a maximum of 800 ns). This wait state is inserted to guarantee that the data is valid at the falling edge of the write signal. See Figure 7-23 for a description of this state machine.

Interrupt capability is also provided through interrupt line IR4. The interrupt line is named TTYINT–.

Wait State Generator State Machine (U471)

The state machine in U311 is used to insert a 400 ns to 800 ns wait state (one to two cycles of the 2.5 MHz clock) into the Microprocessor. This wait state is inserted only when the RS-232 port is written by the Microprocessor, or when the Microprocessor reads or writes the Real Time Clock. Figure 7-22 shows the state diagram for the wait state generator.

In addition to the state machine, U311 contains the tri-state buffers for the four data lines of the Real Time Clock integrated circuit (U310).

Real Time Clock

The Real Time Clock consists of a Oki Semiconductor MSM62X42BRS clock/calendar and a PLS155 programmable logic device.

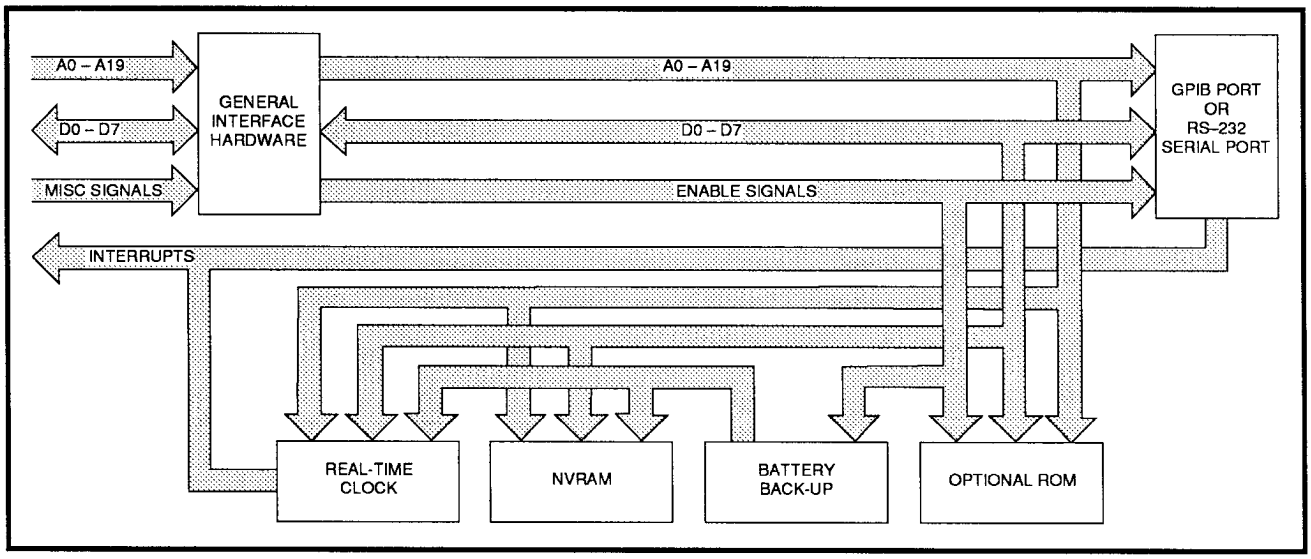

Figure 7-22. Block diagram for GPIB and RS-232 boards.

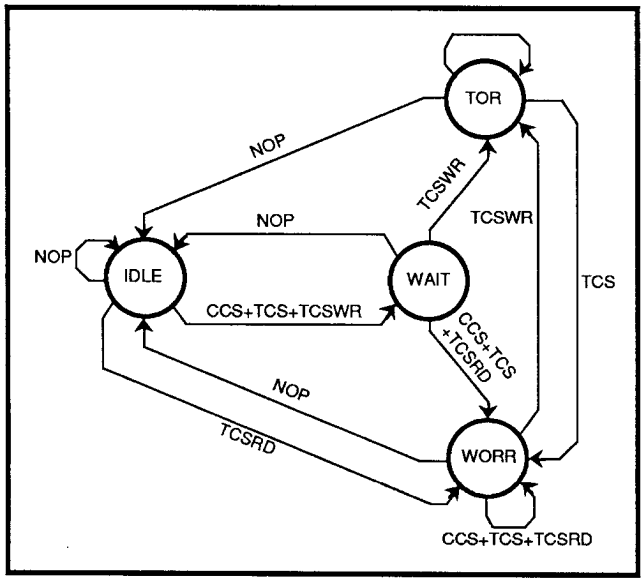

Figure 7-23. State diagram for the wait state generator in U311.

The clock/calendar device takes a 32,768 Hz clock and divides it down to 1 Hz. This 1 Hz clock is then used to drive the time registers. Each time register consists of some multiple of ten of the current time (that is, 1 second, 10 seconds, 1 minute, 10 minutes, ..., 10 years). By reading each register in the device, the time can be determined and displayed. In addition, writing each register allows easy setting of the time.

Due to the long time delay from address valid to data valid, a state machine that inserts wait states into the Microprocessor read and write cycles is used. This state machine, residing in U311, monitors the RTC– signal (real time clock enable). As soon as the RTC– signal goes low, the BWAIT– line is pulled low through transistor Q210. The state machine holds BWAIT– low for a minimum of one cycle of a 2.5 MHz clock (400 ns) and a maximum of two cycles of the 2.5 MHz clock (800 ns). This will guarantee that the data at the outputs of the Real Time Clock chip are valid.

See Figure 7-23 for a description of the state machine described above.

The Real Time Clock circuitry is backed up by a battery. See the Battery Back-Up Circuit description.

Optional ROM

The optional ROM consists of two sockets for different sizes of EPROMs. The different sizes are selected through jumpers located on the board.

The installation of jumpers J500, J501, and J510 are dependent on the size of the EPROMs installed for U410 and U312, as follows:

EPROM JUMPER INFORMATION

EPROM Size	Jumpers Installed
27C512	J500 J501
27C010	J500 J510
27C020	J500 J510

NVRAM

The non-volatile RAM consists of three 32,768 by 8 MixMOS RAM devices for a total of 96k bytes of storage space. In addition, there is circuitry to allow for battery back-up of the NVRAM. This will prevent random corruption of the stored data during power-down. See the Battery Back-up Circuit description.

Battery Back-Up Circuit

The battery back-up circuit consists of a 2.8 V lithium battery, four CMOS OR gates, and a DALLAS DS1210 power monitor.

The three NVRAM chips (U220, U320, U420), the Real Time Clock chip (U310), and the CMOS OR gates (U120 and U130) are powered by the battery back-up hardware.

The DS1210 (U110) performs two functions. The first is to pass its CE input to the CEO output while the power supply is above 4.75 V. When the power supply falls below 4.75 V, the CEO output is pulled to VCCO. The second function is to monitor the VCC input and pass it to the VCCO output while VCC is above 4.75 V. When VCC falls below 4.75 V, the VCCO output switches to the battery supply (VCC of the NVRAM and RTC becomes approximately 2.6 V).

To ensure that the NVRAM and RTC will not be written to while under battery operation, the chip selects are forced high through the use of the CMOS OR gates (U900). While running on the power supply, the CEO output of the DS1210 is low (the CE input of U110 is tied to ground). This output is fed into one input of a two input OR gate. The other input of the OR gate is tied to the CE of the device to be accessed (i.e. RAM0– for U227). The output of the OR gate then drives the CE of the device to be accessed. When VCC drops below 4.75 V, the CEO output of U110 goes high, pulling the CE input of the device switching to battery back-up power high and disabling that device until VCC rises above 4.75 V again.

Except for those connectors unique to each board, the description up to this point is common to both the GPIB and RS–232 boards.

Interface Hardware

The Interface Hardware contains all of the components necessary to access the different sections of the boards. Without this hardware, the Microprocessor cannot read or write any section of the hardware.

The Interface Hardware consists of three 8-bit buffers (U430, U440, and U460), which buffer the address and control signals from the Microprocessor board (through J550) and a single 8-bit bi-directional buffer (U450), which buffers the data lines to and from the Microprocessor board (through J550).

To decode the address lines from the Microprocessor, two programmable logic devices (PLD) are used (U330 and U340). The outputs of U330 are used to enable the different sections of the hardware for either a read or write operation.

An interrupt byte (block) is provided through an 8-bit buffer (U350) that can be read
by the Microprocessor. Each bit in this buffer gives the status of one of the sections of the hardware.

In addition to the interrupt block there is direct access to the Microprocessor interrupt handler through interrupts IR4 and IR5 (RS–232 and Real Time Clock/GPIB interrupts respectively).

The address decoding is done in two steps. First the upper nine bits of the address (A19 to A11) are fed into U340. These address lines and the IO/M– signal are used to generate the IOEN (I/O enable) and MEMRD (memory read) signals. These two signals are fed into U330 for further decoding. In addition to the IOEN and MEMRD lines, the RAM0–, RAM1, RAM2–, ROM0–, and ROM1– lines are generated. These four lines enable the NVRAM or optional ROM chips.

The second step is to take the IOEN and MEMRD lines from U340 with the RD– and WR– lines, and the rest of the address lines (A10 through A3) to generate the enables for the remaining sections of the hardware.

Hardware Interface

All connections to the Power Supply board are made through a 24-pin connector. The connections to the Microprocessor board are through a 50-pin connector. Connection to the rear-panel connector is made by means of two rows of square pins.

Brief descriptions of the internal instrument control for both GPIB and RS-232 are given in Table 7-12. External connector signal names are given in Tables 7-13 (GPIB) and 7-14 (RS-232).

Power Supply Requirements

Both the RS-232 and GPIB boards require only a +5 V supply and ground. The +5 V supply and ground are provided through connector J8 on the Power Supply board. The total power dissipation is <5 W (+5 V at 1 A).

Connector Pin Outs

Tables 7-15 through 7-19 give the pin out for each connector on the GPIB and RS-232 boards.

NOTE

Refer to the 75160 and 75162 (U130 and U131) data sheets for all input and output specifications for the external port.

Table 7-12
MICROPROCESSOR INTERFACE CONNECTOR SIGNAL NAMES AND DEFINITIONS (J550)

Signal Name	Description	Source Module
BCLK	Buffered Clock (TTL): Microprocessor crystal oscillator divided by six. Approximately 2.5 MHz.	Microprocessor
BRD–	Buffered Read (TTL): Buffered Microprocessor read signal.	Microprocessor
BWR–	Buffered Write (TTL): Buffered Microprocessor write signal.	Microprocessor
BIO/M–	Buffered I/O or Memory (TTL): Microprocessor signal used to determine if the read or write is for an I/O device or memory.	Microprocessor
BRST–	Buffered Reset (TTL): Microprocessor reset line.	Microprocessor
BWAIT–	Buffered Wait (TTL): Line to Microprocessor used to insert wait states.	Digital Options Display Storage
BD0 through BD7	Buffered Data (TTL): Microprocessor data lines.	Microprocessor
BA0 through BA19	Buffered Address (TTL): Microprocessor address lines.	Microprocessor
BMT–	Boot Memory Test (TTL): Maps an optional ROM on the module to high address space for diagnostics code.	Digital Options
IR4	Interrupt 4 (TTL): Interrupt line to interrupt handler on the Microprocessor board.	Digital Options
IR5	Interrupt 5 (TTL): Interrupt line to interrupt handler on the Microprocessor board.	Digital Options
VPROG	Voltage Program (TTL): Programming voltage for EPROMs on the Digital Options board.	External Programmer
ROMVCC	ROM Power Supply: Power supply that is selectable for either programming voltage levels or operating voltage levels.	Microprocessor

Table 7-13
GPIB CONNECTOR SIGNAL NAMES AND DEFINITIONS (J150).

Signal Name	Description	Source Module
GD1 through GD8	GPIB Data Bus (TTL): Data bus lines for GPIB.	Digital Options or Controller
EOI	End or Identify (TTL): Signifies end of message block or requests parallel poll depending on ATN line.	Digital Options or Controller
REN	Remote Enable (TTL): Selects control by way of GPIB.	Controller
DAV	Data Valid (TTL): Handshake line indicating data is valid.	Digital Options or Controller
NRFD	Not Ready For Data (TTL): Handshake line indicating readiness for data.	Digital Options or Controller
NDAC	Not Data Accepted (TTL): Handshake line indicating if data was accepted.	Digital Options or Controller
IFC	Interface Clear (TTL): Resets interface to a known state.	Controller
SRQ	Service Request (TTL): Set to indicate a need for service.	Digital Options
ATN	Attention (TTL): Used to decode commands or data being sent or received.	Controller

Table 7-14
RS-232 CONNECTOR SIGNAL NAMES AND DEFINITIONS (J140 AND J150)

Signal Name	Description	Source Module
CD/TIP	Carrier Detect: Enables the internal receivers	Rear Panel
DSR	Synchronization: Sets or resets the SYNCH/HUNT bit of read register zero of U380 (Z85C30).	Rear Panel
RXD & RXD-B	Receive Data: Serial data receive lines.	Rear Panel
RTS	Request To Send: Follows the RTS bit in write register five of U380.	Digital Options
TXD & TXD-B	Transmit Data: Serial data transmit lines.	Digital Options
CTS	Clear To Send: Enables the serial data transmitters.	Rear Panel
DTR & DTR-B	Data Terminal Ready/Request: Used to request DMA access Digital Options or show terminal ready.	Rear Panel Digital Options

Table 7-15
PIN OUT FOR CONNECTOR J8 ON THE POWER SUPPLY BOARD

Pin No.	Pin Name
1	No Connect
2	No Connect
3	No Connect
4	SYSRST–
5	No Connect
6	DOAUD
7	No Connect
8	CLKO
9	DATAI
10	DATAO
11	+10V
12	+10V
13	+5V
14	+5V
15	GND
16	GND
17	–11V
18	–11V
19	DOLATCH–
20	No Connect
21	No Connect
22	No Connect
23	No Connect
24	No Connect

TABLE 7-16
PIN OUT FOR GPIB CONNECTOR J150

Pin No.	Pin Name
1	GD1
2	GD5
3	GD2
4	GD6
5	GD3
6	GD7
7	GD4
8	GD8
9	EOI
10	REN
11	DAV
12	Ground
13	NRFD
14	Ground
15	NDAC
16	Ground
17	IFC
18	Ground
19	SRQ
20	Ground
21	ATN
22	Ground
23	SHIELD
24	Ground

Table 7-17
PIN OUT FOR RS-232 CONNECTOR J140

Pin No.	Pin Name
1	CD/TIP
2	DSR
3	RXD
4	RTS
5	TXD
6	CTS
7	DTR
8	Connector Key
9	Ground
10	No Connect

Table 7-18
PIN OUT FOR RS-232 CONNECTOR J150

Pin No.	Pin Name
1	No Connect
2	No Connect
3	RXD-B
4	Connect to pin 6
5	TXD-B
6	Connect to pin 4
7	DTR-B
8	No Connect
9	Ground
10	Connector Key

Table 7-19
PIN OUT FOR CONNECTOR J550

Pin No.	Pin Name
1	Ground
2	BCLK
3	Ground
4	BRD–
5	VCC
6	BWR–
7	VCC
8	BIO/M–
9	BRST–
10	BWAIT–
11	BD7
12	BA19
13	BD6
14	BA18
15	BD5
16	BA17
17	BD4
18	BA16
19	BD3
20	BA15
21	BD2
22	BA14
23	BD1
24	BA13
25	BD0
26	BA12
27	BMT–
28	BA11
29	No Connect
30	BA10
31	No Connect
32	BA9
33	IR4
34	BA8
35	IR5
36	BA7
37	No Connect
38	BA6
39	VPROG
40	BA5
41	ROMVCC
42	BA4
43	VCC
44	BA3
45	VCC
46	BA2
47	Ground
48	BA1
49	Ground
50	BA0

SWEEP S12

A Miller integrator, U270, is the core of the sweep generator. With a logic low at pin 16 of the analog switch U260B, the switch is closed. All of the timing current from pin 3 of U170 then flows through the switch, and the voltage across the switch is nearly 0 V. Thus, the sweep voltage is approximately the same as the voltage at pin 3 of U270, ≈+1.3 V. When the sweep logic circuit, U460, receives the proper signal, pin 19 goes to a high state and the switch (U260B) opens. All of the timing current is then steered to the timing capacitors, and they begin to charge. Operational amplifier U270 maintains a 0 V difference between its input pins 2 and 3 by changing its output voltage to provide the displacement current to the timing capacitors. Since the capacitor charges linearly, the resultant output at pin 6 of U270 appears to decrease linearly. Thus, the sweep is generated. The sweep continues to decrease until the voltage at pin 9 of U470B is less than the voltage at pin 10 (of U470B). At that time, the output of U470B goes to a low state and clears the sweep gate flip-flop inside U460, and a retrace cycle is initiated. The sweep logic circuit, U460, sets pin 16 of U260B low, closing the analog switch. The timing current is diverted from the timing capacitors, and the capacitors begin to discharge. The resultant sweep voltage starts to rise. When sweep voltage discharges to within 28 mV of its final value, the output of U540B goes to a high state. This releases the holdoff capacitors C253 and C252. One of these begins to charge. When this voltage reaches approximately 1 V, a RS flip-flop inside U460 resets and the holdoff cycle is finished. The sweep gate logic circuit is then enabled to accept another trigger and, if in the free run mode, another sweep is then started.

The transistor Q574 is used to abort the sweep and initiate another holdoff.

The transistor Q255 is used to choose a long or short holdoff time. A logic 1 at pin 13 of U312 turns on the transistor, diverting the available current to charge C252. This has the effect of making the holdoff capacitor look larger.

The multiplexer U170 is used to determine the timing current to be used while U160 chooses the timing capacitor.

The trigger signal is selected by the multiplexer U452. The output on pin 3 (TRIG) goes to the input of comparator U470A. This is wired as a Schmitt trigger with the threshold set by the voltage appearing at pin 4 of U470A. This threshold voltage is always positive regardless of the value of TLVL. The circuit composed of CR373 and U374B provides an absolute value generator. When the value of TLVL is negative, the operational amplifier U374B is in equilibrium and the output is positive. When the value of TLVL is positive, the output of U374B goes as far negative as possible, effectively turning off CR373 (the operational amplifier is open loop). With CR373 off, the value of TLVL appears at pin 4 of U470A. When U374B is open loop, Q351 is turned on and pin 3 of U460 goes to a logic 0. This is the slope input that is 'EXCLUSIVE OR-ED' with the trigger input at pin 2. Thus, the opposite slope is selected.

When TLVL is not being used to set the trigger level of the sweep, it can be used for the manual scan as these two functions are entirely mutually exclusive. During a manual scan, pin 7 of the sweep logic IC U460 is set low. This sets the sweep gate flip-flop in U460. Also the multiplexer U160 is set to select R162, the 100 kΩ resistor. Multiplexer U170 is set to select current input from R175 that ultimately originates at TLVL. The Miller integrator U270 is then used as an amplifier and the output voltage is then proportional to the value of TLVL.

The source for the continuous TV line trigger and TV field trigger is from the sync separator, U320. This chip provides a vertical interval and composite sync. The composite sync contains the elements of the equalization pulses that occur during the vertical interval. This composite sync is fed to the two monostable multivibrators that are used to strip off the double pulses that occur during the vertical interval. One of the timers, U225A, is set for a pulse width of 3/4 of a horizontal scan. This output is used to inhibit another trigger from occurring on either monostable multivibrator until it has timed out. The other timer, U225B, provides an approximate 10 µs pulse that is used as a general horizontal blanking pulse (HCLK).

Composite video source for the sync separator is from the output of the operational amplifiers U244 (for positive sync) or U343 (for negative sync). U244 also forms the source of the internal trigger.

The video monitor mode is generated by using the vertical sync outputs of the sync separator and HCLK to control an auxiliary sweep generator formed by U560B and its associated components. This ramp generator (U560B) provides the vertical sweep while the normal sweep circuit forms the horizontal sweep. When the video monitor mode is selected, Q522 is turned off, which lowers the sweep current, slowing the normal 5 µs per div sweep to approximately 6.3 µs per div. This has the effect of stretching out the TV picture over the entire length of the screen. When a vertical scan is nearly complete, the output of comparator U540A goes high and on the next HCLK, the signal at pin 14 of U670 goes high. At this time, Q664 turns on Q663 and the vertical sweep capacitors C564 and C563 are discharged, thereby resetting the vertical sweep to 0 V, the top of the screen. The signal VLVL is used to speed up or slow down the vertical sweep to allow the vertical interval to be observed in detail and to allow for various vertical scan rates. When the video monitor is enabled, the Z-axis signal is selected through analog switches U443A or U443D, depending on the desired polarity.

The video monitor mode has two input sources. First, in the AM mode, the input source is from the video amplifiers located on the Log board. Second, in the FM (satellite) mode, the video source is from the FM demodulator (U770 on the Sweep board). The input of the FM demodulator is from amplifier U760, which provides approximately 16 dB of gain. The input to the board (to U760) is picked off just prior to the 110 MHz bandpass filter, located on the RF Mother board. The output of the FM demodulator is then fed to operational amplifier U690, which inverts the signal and adds an offset. Analog switches U260A and U260C are used to select between broadcast (AM) video and satellite (FM) video.

The selective line trigger is selected by programming a line number in the counter made up of U510, U620, and U630. This counter is then decremented by HCLK. When the counter is at a minimum count (0), the signal at pin 15 of U630 goes to a low state. This signal is then delayed for one HCLK to remove any glitches that would produce a false trigger. The delayed terminal count appears at pin 17 (HTRIG) of U670. This signal is used to trigger the sweep. The line trigger counter is preset during field one by the signal at pin 7 of U670. This preset signal is generated in U670 by sensing whether the timer U225A has timed out at the beginning of the vertical interval. The vertical output of U320 always starts at the beginning of the major serration during the vertical interval. This serration starts just prior to an HCLK during one field. During the next field, the serration starts on an equalization pulse half way between HCLK. This difference is used to determine the odd/even field. When the odd/even field flip-flop inside U670 switches to the high state, a positive edge transition detector generates the preset enable signal for the line counter. The proper number to preset the counter with is determined by adding an offset of 6 for NTSC and 3 for PAL.

The graticule lights are controlled by switching Q707 on, which in turn turns on Q706.

All of the control information is shifted in through four shift registers U211, U312, U610, and U520.

FRONT PANEL S13

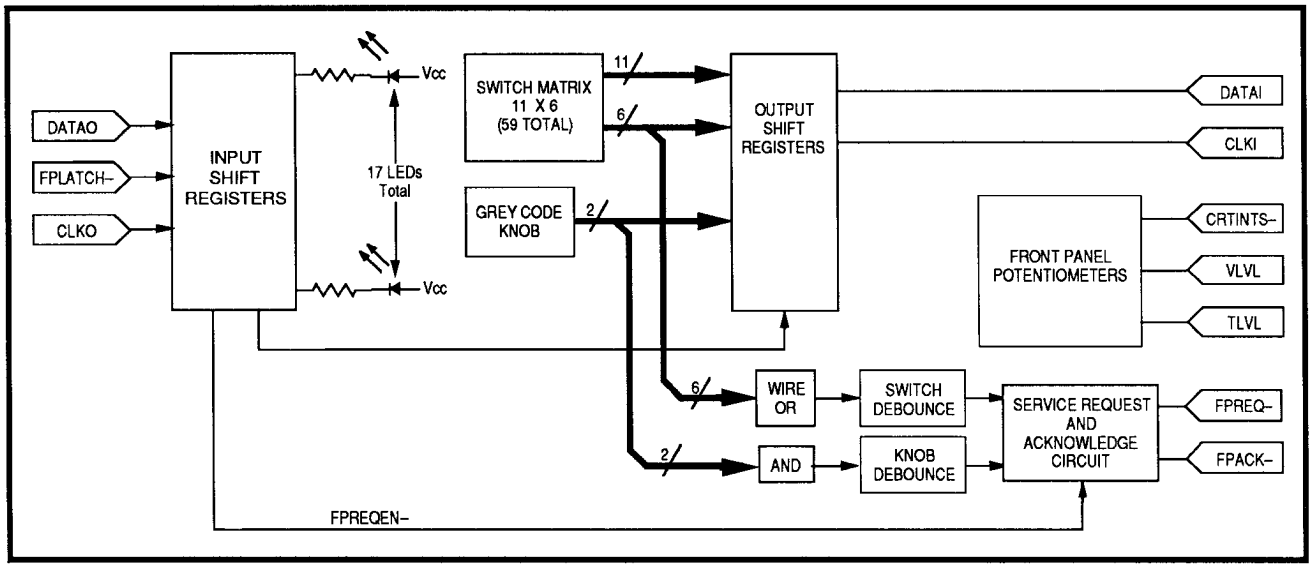

Figure 7-24. Front Panel block diagram.

The Front Panel acts as an interface between the user and the instrument. These circuits translate operator actions on front-panel controls into data for the Microprocessor to read and execute. The Microprocessor outputs data showing current operating modes to the user through LEDs (light emitting diodes) and CRT readout.

The Front Panel consists of five sections. These sections are the Input Shift Registers, the Switch Matrix, the Debounce circuitry, the Gray Code Knob, and the Service Request/ Acknowledge circuitry. See Figure 7-24.

INPUT SHIFT REGISTERS

The Input Shift Registers consist of three serial-input, parallel-output shift registers cascaded together. The outputs of the shift registers drive the front-panel LEDs and provide two control signals. The LEDs are connected from the +5 V supply to the shift register output through a 274 Ω resistor. The nominal LED current is 10 mA. This current is high enough to provide adequate light for the LED to be seen in direct sunlight. A low (zero) is required on the output of the shift register to light the LED.

Two control signals are provided on the shift register outputs. They are the front-panel request enable (FPREQEN–) and the clock-in enable (CLKIEN–). Both of these signals are active low.

The FPREQEN– signal is used to enable the front panel request output buffer. If FPREQEN– is in the inactive state, the front panel service request line to the Microprocessor will always be active (always requesting service).

The CLKIEN– signal is reserved for future use.

SWITCH MATRIX

The Switch Matrix consists of 59 normally open single-pole, single-throw switches. These switches are configured in a 6 X 11 matrix (possibility of 66 switches total). By using this matrix, it is possible to determine the location of a closed switch by looking at the rows and columns of the matrix.

Each column in the matrix is held low by a 100 kΩ resistor to ground, while the rows are connected to the +5 V supply through a 22.1 kΩ resistor, and to the base of an open collector transistor. When all the switches are open, the transistor is in the off state, thus the row line is low (ground). When a switch is closed, the base of the transistor is pulled down to approximately 4.3 V and the transistor turns on, thus pulling the row line to the +5 V supply. At the same time, the column line is pulled high due to the resistor divider on the base of the transistor.

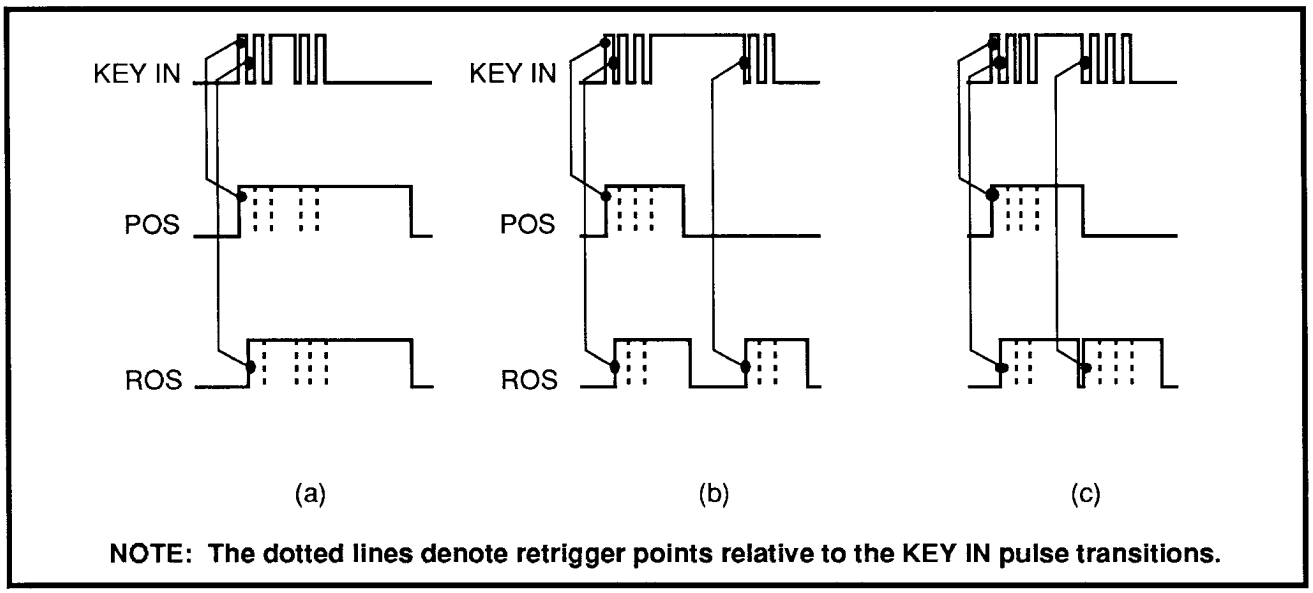

Figure 7-25. Three possibilities of key presses and releases, and how the debounce circuit works for each possibility.

The row and column lines are fed to inputs of three parallel-to-serial shift registers. In addition to the shift registers, the row lines are wired to form a phantom OR gate whose output triggers a debounce circuit.

SWITCH MATRIX DEBOUNCE CIRCUIT

The debounce circuitry for the switch matrix consists of three retriggerable single-shots. Two of these single-shots are used to establish the minimum time between key presses. The third single-shot is used to debounce the switch being pressed.

The two single-shots used to establish the minimum time between key presses operate as follows:

> The row lines of the switch matrix are wired to form a phantom OR gate whose output drives the trigger inputs of both single-shots. Each single-shot triggers on the opposite edge of the other. The rising-edge-triggered single-shot is called the Press One-Shot (POS), while the falling-edge-triggered single-shot is called the Release One-Shot (ROS).

For a typical key press, the one-shots will operate as follows:

1. The key is pressed and a rising edge is presented to both the POS and the ROS.

2. The POS is triggered and its output goes active.

3. Due to the bouncing of the switch a negative edge is presented to both the POS and ROS.

4. The ROS is triggered by this edge and its output becomes active.

5. Steps 2 and 4 are repeated, retriggering either the POS or ROS, until the switch has stabilized in the closed position.

6. Each single-shot then times out approximately 50 ms after the last valid trigger.

7. Now the switch is released and a negative edge is presented to both the POS and the ROS.

8. This edge triggers the ROS and its output becomes active.

9. With the ROS output active and POS output inactive, the POS is held in the reset state by a NAND gate.

10. The ROS is retriggered, by each falling edge of the bouncing switch, until the switch has stabilized in the open state.

11. After approximately 50 ms, the ROS times out and its output becomes inactive.

12. Now the POS and the ROS are ready for another key press.

Figure 7-25 shows the three possible scenarios of key presses and how the debounce circuit reacts to each one.

> (a) Switch pressed and released inside the 50 ms time of POS.
>
> (b) Switch pressed and released well after both the POS and ROS have timed out.

(c) Switch pressed and released with the POS becoming inactive during the release.

The debounce single-shot is triggered by the rising edge of the POS and has a 1 ms pulse width. Two things occur at the end of the 1 ms pulse.

1. The status of the switch matrix is stored in the output shift registers (U130, U140, and U319).

2. The service request circuit on the Front Panel board is activated.

GRAY CODE KNOB

The gray code knob is a rotary knob that outputs a two bit gray coded pulse train. The direction of the knob is decoded by monitoring the two output lines of the knob. The two knob outputs drive a NAND gate whose output is used to trigger a single-shot. The single-shot is positive-edge triggered. Triggering the single-shot in this method gives a pulse to the Service Request/Acknowledge circuit as the knob leaves the position of both bits high. The direction of the knob can be determined by loading the status of the knob just after the both-bits-high position.

Two open-collector transistors on the knob outputs are used to set the correct TTL levels. In addition, two Schmitt trigger inverters are used to buffer the transistor outputs and speed up the edge transitions.

SERVICE REQUEST/ACKNOWLEDGE CIRCUITRY

The Service Request/Acknowledge circuitry consists of two flip-flops (request for service flip-flop) that request service from the firmware. A description of a typical request for service and firmware acknowledgment follows:

1. A key is pressed on the front panel and the output of the PressOne-Shot goes high.

2. The rising edge on the PressOne-Shot output triggers the debounce single-shot. The falling edge of this pulse loads the switch matrix status and clocks the first flip-flop.

3. The output of the first flip-flop then sets the request for service flip-flop, making the FPREQ– signal low (active).

4. The output of the request for service flip-flop is then used to reset the load flip-flop, thus completing a load pulse for the shift registers.

5. After the firmware recognizes the request for service, the FPACK– line is set low, which enables the DATAI and CLKI tri-state buffers.

6. The data is then clocked out of the switch matrix shift registers.

7. After the data has been clocked out, the FPACK– line is set high, disabling the DATAI and CLKI tri-state buffers.

8. The rising edge of FPACK– is also used to reset the request for service flip-flop.

9. The board is now ready for another key press.

DIAGNOSTICS AND TESTABILITY

There are two diagnostic tools available for the front panel. These diagnostic tools reside in instrument firmware and are the key test and the LED test. The two diagnostic tools are used during initial board turn-on and when the front panel needs repair. Descriptions for these diagnostic tools follow.

Key Test

The key test is located in the extended diagnostics menu of the instrument and consists of text prompting the technician on which key to press. If the correct key is pressed, its location in the switch matrix and the next switch to be pressed are displayed. If the incorrect key is pressed, the speaker beeps, and the same key-press is prompted again. Up to four incorrect key presses are allowed before the firmware continues on to the next key.

LED Test

The LED test is also located in the extended diagnostics menu of the instrument and uses the knob to light each LED one at a time, in a known sequence. By rotating the knob, each LED is lit. The test runs until the backspace key is pressed.

POWER SUPPLY <2>

(SWITCHER/SECONDARIES)

This Power Supply operates with a line input voltage from 90 Vac to 250 Vac without range switching. This is done by regulating the rectified AC input (125 V to 350 V) to 60 Vdc.

An inverter drives a transformer having numerous secondaries, including a high-voltage winding (1400 V peak) for the CRT supplies. The secondary voltages are rectified to provide operating power for the instrument.

The high-current secondary output, +5 V, is regulated by feedback to the primary pulse-width modulator. The other secondary outputs track +5 V fairly closely, except for the high voltage supplies, which have secondary regulation.

The Power Supply circuits are divided into the primary circuits and the secondary circuits.

PRIMARY

The Power Supply primary circuits consist of the AC Input circuit, a Pulse Width Modulator (PWM), an Inverter, and a Frequency Lock circuit. See Figure 7-26.

AC Input

Input power is applied through an EMI line filter, a line fuse, an on/off switch, additional EMI filtering, and a full-wave rectifier and storage capacitor. The line filter prevents power-line interference from entering the Power Supply and also attenuates internally-generated signals radiating out the power cord. The additional EMI filtering attenuates harmonic noise generated in the PWM and conducted out the power cord. Additional EMI filtering consists of a common-mode choke, line-to-line capacitors, and line-to-ground capacitors.

A thermistor, having a negative temperature coefficient, limits current surge at power-up. The surge current drops within several cycles of line input as the storage capacitor charges. When power is applied, the thermistor limits the line current until the it has had time to warm up. As the line input current heats the thermistor, the increase in temperature decreases the resistance value of the thermistor, reducing power loss across the thermistor.

The AC line signal is coupled to the secondary through T110 and is also used in the trigger circuits as a line trigger source.

PWM

Integrated circuit U280, a multi-function PWM IC, is used to drive a MOSFET switch. The PWM, operating in a single-ended mode, sets frequency, regulates voltage using its internal +5 V reference, allows current limiting, and provides a slow start up.

At power-up, there is a delay until R185 charges C290 to approximately 20 V, at which time Q690 and Q691 turn on to supply power to the PWM IC. The capacitor provides drive current until the PWM output (TP293) reaches 60 V relative to special ground (TP190).

Initial pulses to the MOSFET switch are narrow, but they gradually widen as C691 (between pins 4 and 14 of the PWM IC) charges. If current through R260 at the source terminal of the MOSFET switch exceeds 1.9 A, the pulse width is limited until C163 at the primary center tap of the power transformer charges up to the desired voltage. The PWM operates in a voltage control mode set by the string R693, R682, R685, and R686, where the output voltage across C163 is compared to the PWM's internal +5 V reference. The negative end of the +5 V reference is connected to TP293 (60 V above special ground). Frequency is set by C690 and R694 in parallel with R681 and R680. Pin 10 of the PWM conducts through CR680 and R672 to Q270 (a MOSFET switch) for fast positive transitions. Transistor Q680 turns on for fast negative transitions. Series RC damping networks R696/C692 and R684/C681 compensate the PWM transient response.

The MOSFET duty factor is approximately E_o/E_{in}. This will be approximately 16% (2.2 µs) at 250 V line input. The PWM IC has a maximum duty factor of 95%, which means that voltage E_{in} across storage capacitor C171 can drop to approximately 70 V before loss of regulation occurs.

Three components carry high current. These are MOSFET Q270, commutating diode CR270, and coupled winding energy storage inductor (transformer) T190. Capacitor C280 between the storage inductor windings compensates for leakage inductance. The transformer has two auxiliary windings. One winding, pins 6 and 7, has a positive peak of 20 V and provides current for the PWM through 6.2 V zener diode VR690 and CR290. The other winding, pins 9 and 10, drives out-of-phase current through a small capacitor connected to the chassis. This reduces line-conducted EMI by cancelling current flowing through stray capacitance to chassis from the drain of Q270 and other parts connected to the same node.

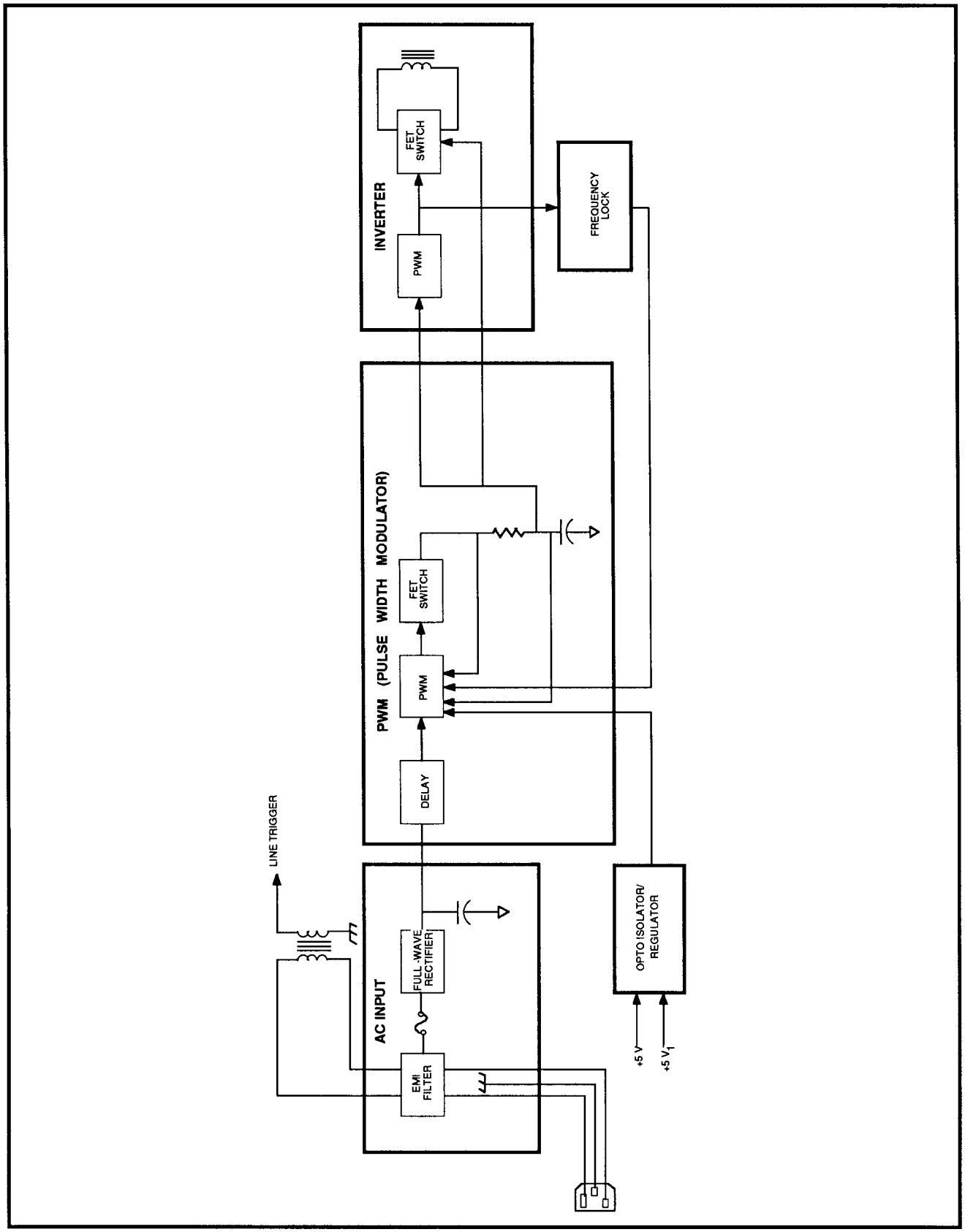

Figure 7-26. Power Supply primary block diagram

Current into C163 at the center tap of the power transformer is continuous, as in a Buck regulator. The current in the storage inductor ramps up when Q270 is on and ramps down when CR270 conducts. Since there is current and stored charge in the diode when Q270 turns on, L170 is included in the loop to limit current and reduce power losses. Energy stored in L170 is recovered with three diodes and a capacitor and transferred to the output.

Inverter

The inverter consists primarily of a PWM IC, a pair of MOSFETs, and the power transformer. The MOSFETs are driven in push-pull mode by U260, the PWM IC. There is no regulation to modulate the pulse-width of the drive signals. Current flows through the power transformer from the center tap to the closed MOSFET switch. The operating frequency is approximately 26 kHz as set by R664 and C661. Supply current for U260 is through R261 clamped to 12.4 V by VR660 and VR661.

The low impedance, fast switching of the MOSFETs is slowed down by series inductors L241 and L250. Damping networks consisting of diodes, resistors, and capacitors address two conditions. As each MOSFET turns on, the drain inductor, transformer leakage inductance, and transformer reflected capacitance resonate. This is damped by CR740, CR640, and R240. Also, when each MOSFET turns on, CR250, CR260, C151, and R152 limit the peak voltage excursion to approximately 120 V. The series resistor-capacitor (RC) networks across the inductors absorb some energy in both conditions.

Instrument with serial number B030000 and later. A dead time control (DTC) R669 has been added which will be used to set the maximum high voltage measured at the –2.75KV test point by varying the voltage at pin 1 of U260. New values for C262 and R652 have been chosen to lower the effect of the leakage current from pin 4 of U260. Any pin 4 leakage current through R652 will reduce Power Supply performance. Supply regulation for U260 has been improved by lowering the resistance of R261.

Frequency Lock

The inverter frequency is approximately 26 kHz and the preregulator operates at 3X this rate. The D flip-flop U670A is clocked at 78 kHz with the D input driven at 26 kHz through clamp diode CR661. The Q output is RC-filtered and modulates pin 6 of the PWM IC to maintain the 3:1 frequency ratio. When R680 is adjusted for lock, one sample of the D input is low, the second is high, and the third is at the edge of the 26 kHz waveform. When the third sample is high, the filtered output to the PWM will reduce its frequency, and increase the frequency when low. This lock prevents low-frequency IM between the two frequencies that could be audible. The lock can occur at various ratios with 3:1 chosen so the predominant harmonic of the inverter coincides with the PWM fundamental.

SECONDARY

The +5 V potentiometer, R937, is used to adjust +5 V1, the reference voltage. This reference voltage is compared with the +5 V supply by U630B, and an error voltage is generated. Feedback through the opto-isolator U281 controls the pulse-width of U280 on the primary side. The center-tap voltage on the primary side of the power transformer is adjusted this way to correct small changes in +5 V. Other secondary DC voltages are determined by transformer winding ratios and degree of loading. Three secondary windings (5 V, 10 V, and 50 V) have series RC damping networks to circulate energy stored in the power transformer leakage inductances.

Choke/capacitor (lc) filter networks at the output of each rectifier reduce ripple to acceptable levels for instrument power.

Most of the available power flows to the +5 V, +10 V, and -11 V supplies. The +20 V supply is lightly loaded and generated by voltage doubling. The fan supply is approximately -11 V. The +50 V and +115 V supplies are used for Z-axis control, CRT adjustments, and deflection amplifiers. The -5 V1 is a stable supply generated by a three-terminal regulator for use in the deflection amplifiers.

Secondary regulation is provided for the high-voltage supplies. U630A and Q130 control the peak-to-peak amplitude of the high-voltage ac voltage seen by both cathode and anode rectifiers. Constant output and post-deflection-anode ratio is maintained as internal loading varies. This keeps the display fixed in size.

POWER SUPPLY <5>

(HV REGULATOR AND CRT BIASING)

DISPLAY

The Display system consists of the following:

- CRT Bias
- Vertical Display circuit
- Horizontal Display circuit
- Z-Axis circuit

See Figure 7-27.

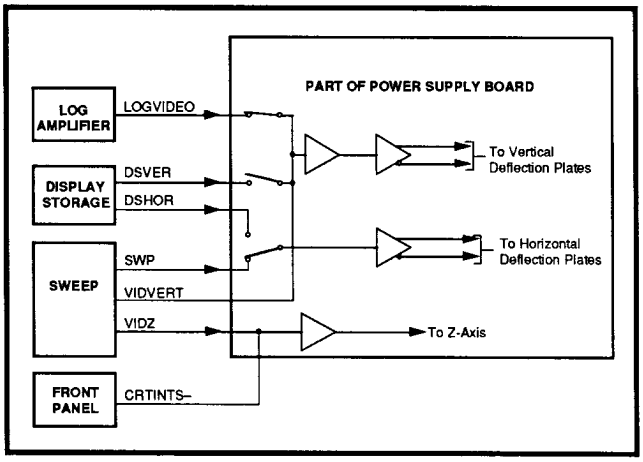

Figure 7-27. Display amplifiers.

CRT Bias

The CRT is biased for optimum focus, intensity, and deflection factor. The bias points for the CRT are as follows:

Cathode	-2750 VDC
Heater	-2750 VDC, 6.2 V_{RMS}
Grid	-2880 VCO
Accelerator	24 VDC
Focus	-2200 to -1925 VDC
Astigmatism	115 to 0 VDC
D3, D4 ave	24 VDC
D3, D4 shield	24 VDC
D1, D2	45 VDC
Geo mesh	115 to 0 VDC
Anode	11000 VDC
TRACE ROT	+30 mA to -30 mA

The voltage multiplier is encapsulated in high-insulation material. Both cathode and anode multipliers are AC-coupled within the multiplier and have multiplication factors of -2 and +8, respectively.

The high-voltage regulator circuit takes a sample voltage from the cathode and controls the impedance of Q130 for a steady cathode voltage. The parallel combination of C130 and Q130 (with R637) is switched into the high-voltage current loop when the voltage at pin 23 of T230 goes negative (CR531 turns off and CR530 turns on.) The positive DC voltage on C130 is added to the negative excursion on the high-voltage winding. Therefore, the total peak-to-peak voltage seen at the input of the high-voltage multiplier is the peak-to-peak voltage at the transformer secondary minus the DC charge on C130. The high-voltage outputs are changed by varying the impedance of Q130, which discharges C130. VR530 and VR630 provide a 300 V clamp that protects C130, Q130, CR530, and CR531 from over-voltage. The cathode has almost 300 V of regulation range.

Instrument with serial number B030000 or above. C130, CR530, CR531, Q130, VR530, and VR630 were changed to extend the cathode regulation range to nearly 400V. Voltage regulators VR530 and VR630 provide a 460 V clamp.

Vertical Display

The Vertical Display circuit is a video amplifier (preamplifier and a paraphase amplifier). Gain and DC offset (Vertical Position) are set at the input of the preamplifier such that, for a full-screen signal, the signal as the input of the paraphase amplifier swings from –0.7 V to +0.7 V. The output of the paraphase amplifier then drives the vertical deflection plates.

Three signals may be applied to the Vertical Display circuitry, namely:

- LOGVID (Detected video from the Log board)
- DSVER (from the Display Storage board)
- VIDVERT (Vertical Scan signal from the Sweep board)

Horizontal Display

The Horizontal Display circuit is a paraphase amplifier. In this case, gain and DC offset (Horizontal Position) are set at the input of the paraphase amplifier swings from –1 V to +1 V. The output of the paraphase amplifier then drives the horizontal deflection plates.

Two signals may be applied to the Horizontal Display circuitry.

- SWP (Sweep from the Sweep board)
- DSHOR (from the Display Storage board)

When an active signal is displayed in normal mode, the horizontal drive signal is the sweep (SWP), and the vertical drive signal is the detected video (LOGVID); when a stored signal is displayed, the horizontal drive signal becomes DSHOR from the Display Storage board, and the vertical drive signal becomes DSVER from the Display Storage board.

When the video monitor mode is enabled, the vertical signal is a vertical scan signal (VIDVERT) and LOGVID and DSVER are switched out. At the same time DSHOR is also switched out, and the sweep signal (SWP) set to a TV line rate. A third signal, VIDZ (live video), is routed to the Z-Axis circuit.

Z-Axis

The Z-Axis circuits receive signals from the Display Storage and Sweep boards and accept control levels from the front-panel INTENSITY control. These signals are then used to control the CRT beam brightness by modifying the CRT control grid voltage.

VIDZ from the sweep board and /CRTINTS from the Front Panel are summed into the Z-Axis drive amplifier. Two gates also drive the amplifier: /DSBLANK during readout display periods and SWPGATE during sweep display periods.

The Z-Axis clipper circuit consists of two series diodes, plus associated components. The voltage that passes the clipper circuit is coupled through a capacitor to the Z-Axis rectifier.

The clipped Z-Axis drive signal is rectified by a pair of diodes. The rectified voltage is then fed to the grid of the CRT. A capacitor couples fast changes of the drive voltage to the grid to speed up the response of the grid circuit. The CRT grid is protected from high-voltage arcs by a spark gap (E110). Also, a 4.75 kΩ resistor at the junction of the clipper diodes protects the rectifier diodes from high-voltage surges in case the CRT arcs. Clamp diodes CR200 and CR201 protect the Z-Axis amplifier from high-voltage transients.

TRACKING GENERATOR (OPTION 04)

BLOCK DIAGRAM DESCRIPTION

The Tracking Generator can be divided into three areas:

- Leveling
- Conversion
- Interfacing

See Figure 7-28.

LEVELING

The leveling section of the Tracking Generator will regulate the Tracking Generator's output, keeping the amplitude flat across the 0 to 1.8 GHz output bandwidth. It can be subdivided into three sections:

- RF amplifiers and filters
- Output attenuator and switches
- Detector with error amplifier

CONVERSION

The converter section combines the spectrum analyzer's 1st LO with an offset frequency to produce an output frequency corresponding to the spectrum analyzer's input window. The converter section can be subdivided into four subsections:

- Isolation amps and power divider
- Converter leveling amp
- 2110 MHz phase lock loop
- Crystal Oscillator

The Isolation Amplifiers prevent 2110 MHz from feeding back into the spectrum analyzer's RF deck where it could reduce the spectrum analyzer's dynamic range. S12 from the mixer to the YIG input port should be approximately –60 dB at 2110 MHz. The amplifiers drive the mixer input at approximately +12 dBm. The converter's leveling amplifier should keep the converter drive power between +15 and +12 dBm. Keeping Option 15 available to users, allowing access to the 1st LO frequency, requires splitting off some power within the isolation chain. Option 15 needs power levels between +6 dBm and +10 dBm over the 2.11 to 3.91 GHz 1st LO range.

The down converter mixes 2110 MHz to 3910 MHz from the leveling amplifier with a 2110 MHz offset frequency to produce 0 to 1800 MHz. The mixer has approximately 20 dB to 30 dB of isolation from the 2110 MHz port (LO port) to the 2110 to 3910 MHz port (Tracking Generator IF port). Note, these are labels only; the 2110 to 3910 MHz port is actually the driving port for controlling the diode switching and the 2110 MHz port is the low-level input, but the 2110 MHz input has been labeled previously as an LO frequency. The fixed 2110 MHz frequency should reach the mixer at a –20 dBm, assuming a 7 dB conversion loss. The converted product leaves the converter at a power level of –30 dBm after passing through a 3 dB pad.

The phase-lock loop provides the source for the Down Converter's 2110 MHz input. This circuit is identical to the 2nd LO used in the spectrum analyzer's 2 GHz oscillator.

The 105.5 MHz VCO is a crystal oscillator with a 10 kHz tune range. This oscillator drives the phase lock loop's mixer with an amplitude of approximately 0 to +4 dBm. The oscillator receives its tune voltage from a 12-bit DAC. Finally, the module provides an output to the spectrum analyzer counter so the spectrum analyzer can accurately place the oscillator's frequency.

INTERFACING

This section provides an interface to the spectrum analyzer's microprocessor and supplies power to the various boards. The supplies provided are +20, +10, +5.2, and –11 volts DC with approximately 100 mVp-p of 20 kHz noise. The supplies are re-regulated and filtered before being distributed throughout the Tracking Generator. The input communication from the microprocessor is three communication lines: serial data (Datao), data clock (CLKO), and a register latch signal (TGLATCH).

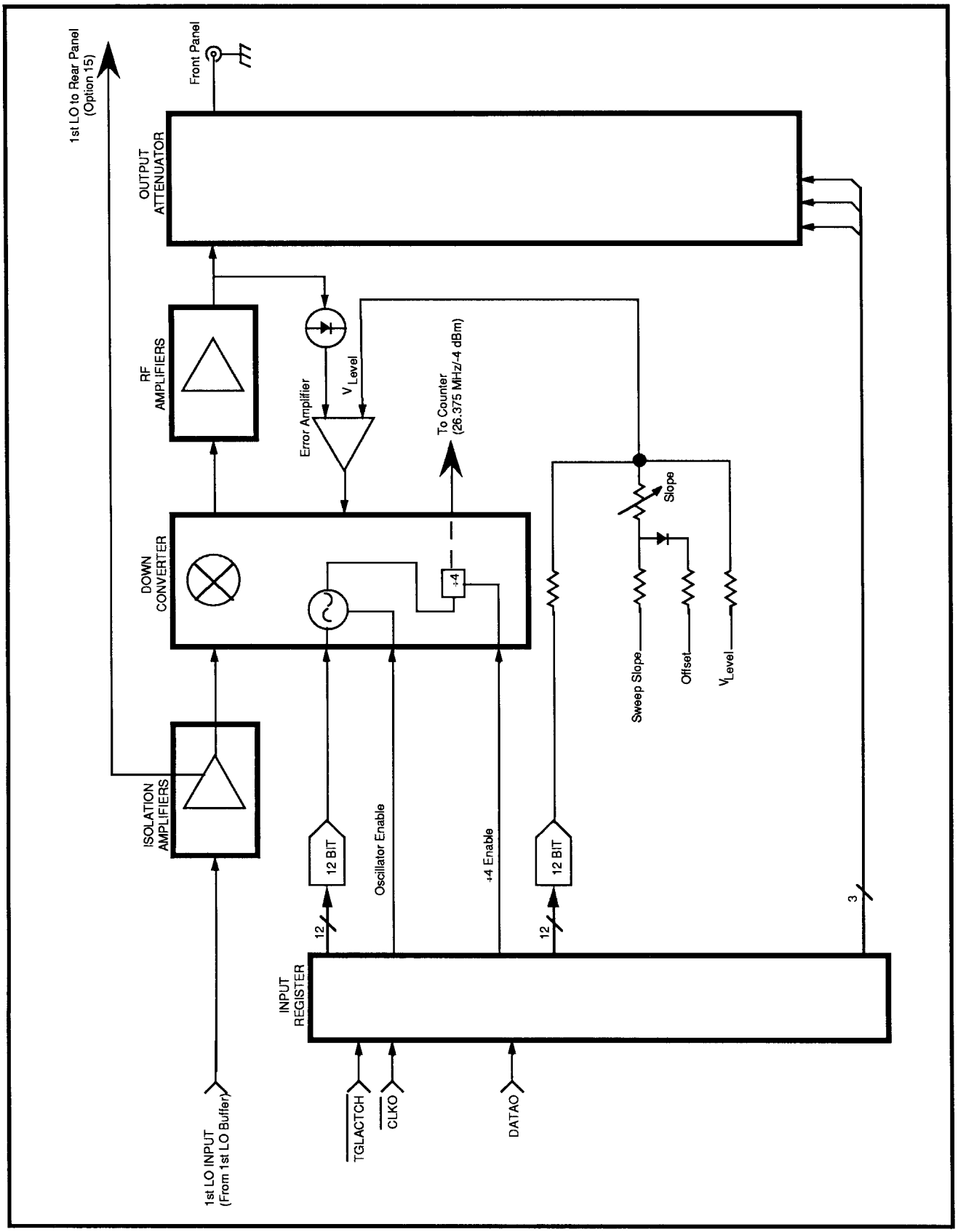

Figure 7-28. Tracking Generator block diagram.

ISOLATION AMPLIFIERS S15 a

The Isolation Amplifier Module performs the following three functions:

- Amplifies the spectrum analyzer's 1st LO for driving the tracking generator's down converter
- Provides partial leveling of the LO power level
- Prevents 2110 MHz from feeding back into the spectrum analyzer's first IF.

AMPLIFIER CHAIN

The module consists of three amplifiers, an unbalanced power divider, a variable attenuator, three fixed attenuators, a 12 dB coupler, a detector, and an error amplifier.

Refer to the block diagram and schematic while reading this description.

The Isolation Amplifiers chain provides approximately +3 dB of forward gain and 85 dB of reverse attenuation at 2110 MHz. This reverse isolation is sufficient to prevent degradation of the spectrum analyzer sensitivity when the tracking generator is operating.

The tracking generator receives the 1st LO (2110 MHz to 3910 MHz) from the spectrum analyzer's 1st LO Buffer Amp (at a power level of +6 dBm to +9 dBm) through an SMA connector. A 3 dB attenuator is placed between the input and the first isolation amplifier. This amplifier provides a forward gain of +6 dB and a reverse gain of –25 dB. The amplifier's output (LO) drives an unbalanced power divider. See Figure 7-29.

The unbalanced power divider taps the amplifier chain with 2.8 dB loss to provide an output for Option 15 when Option 15 is installed in the spectrum analyzer in combination with the tracking generator. This output provides an LO output at +6 dBm to +10 dBm over the 2110 MHz to 3910 MHz LO range, and is terminated in 50 Ω when Option 15 is not installed. A 4 pF capacitor between the output port and the power divider provides DC blocking with approximately 10 dB of return loss.

The other branch of the unbalanced power divider (with a 4 dB loss) feeds the remaining amplifiers of the isolation chain. The LO signal (2110 MHz to 3910 MHz at +5 to +9 dBm) passes through a second 3 dB attenuator and a second isolation amplifier. This amplifier also provides 6 dB of forward gain and –25 dB of reverse gain. The output of the second amplifier has an amplitude of +8 dB to +11 dBm going into the Variable Attenuator.

The Variable Attenuator provides 2 dB to 15 dB of attenuation according to the error voltage received from the Error Amplifier in the Leveling Loop.

An amplifier in the Leveling Loop provides +8 dB of gain in the forward direction and 30 dB of attenuation in the reverse direction. At the output of the Leveling Loop amplifier, –12 dB of the total power is coupled to the Leveling Loop's detector. The detector's output voltage, proportional to the LO power level, feeds an error amplifier that controls the amount of attenuation in the variable attenuator. The Leveling Loop regulates the LO power level and ensures that the mixer receives an LO drive power of +9 dBm to +11 dBm, after passing though a final 3 dB attenuator.

BIASING

All the amplifiers are provided with active bias networks. The bi-polar amplifiers use PNP wrap-around biasing while the FET has a more involved structure. For the NE64535 bi-polar transistors, a resistive voltage divider followed by a PNP emitter-follower ensures that the amplifier's collector voltage is approximately +8 V. The resistive divider keeps the PNP's base voltage at approximately +7 V and the emitter voltage rise establishes ≈+8 V for the amplifier's collector. A 27.4 Ω resistor sets the amplifier's collector current at approximately 20 mA.

The FET bias works differently. Again, a resistive voltage divider in combination with a PNP emitter follower keeps the drain voltage at approximately +3.5 V. Since the gate is tied to ground through a 221 Ω resistor, an additional current buffer is used to keep the gate voltage at the desired voltage level without affecting the collector voltage. Therefore, the primary PNP keeps the drain voltage of the FET fixed, while the second PNP alters the FET's gate voltage to ensure that the particular FET drain voltage is obtained. The 82.5 Ω resistor fixes the drain current at approximately 40 mA.

VARIABLE ATTENUATOR

Two PIN diodes, in combination with two 47.5 Ω resistors and some bias provisions, make up the variable attenuator. The PIN diodes, with an RF resistance of 50 Ω at 1 mA, provide 6 dB of attenuation for the variable attenuator when each diode is 50 Ω. An operational amplifier in combination with an additional biased diode ensure that the total voltage across both PIN diodes is two diode drops (2 Vbe's). By altering the voltage between the two diodes, the PIN diodes' resistances change – one increases while the other decreases. This either increases or decreases the total attenuation of the variable attenuator.

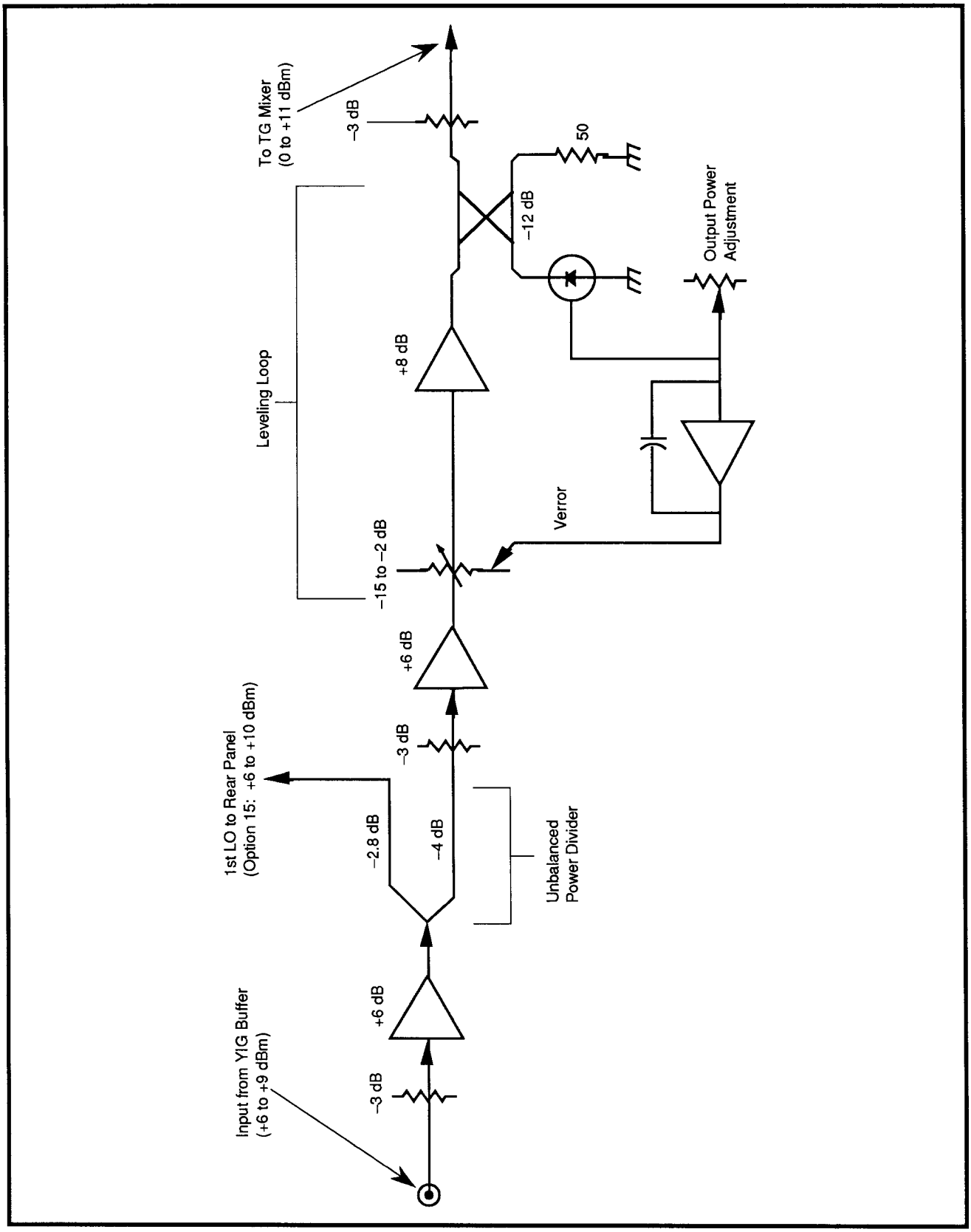

Figure 7-29. Isolation Amplifiers block diagram.

SUPPLIES

The board supplies are available through feed-through capacitors from the interfacing board. The supply ripple is kept at a minimum in order to prevent modulation from reaching the YIG buffer module and producing sidebands. The +9 V supply requires approximately 93 mA and the –9 V supply requires 20 mA, producing 1.02 W dissipation.

PHASE LOCK LOOP S15 b

The Phase Lock Loop (PLL) provides an offset frequency (2110 MHz) for mixing with the spectrum analyzer's first LO frequency. The PLL is locked to the 5th harmonic of a crystal oscillator (105.5 MHz). The PLL's frequency is set to a frequency that ensures that the output frequency of the tracking generator matches the input window of the spectrum analyzer. The PLL module is made up of the following:

- 105.5 MHz Oscillator
- 100 MHz Amplifier
- Phase Detector (mixer)
- Error Amplifier
- 2 GHz Voltage-Controlled Oscillator (VCO)
- ÷4 IC
- Variable Attenuator
- Shaper (for driving the Variable Attenuator)

See Figure 7-30.

105.5 MHz OSCILLATOR

The 105.5 MHz Oscillator can be divided into 5 elements:

- Tank
- Emitter Follower
- Crystal
- Common Base Amplifier
- Varactor Diodes

See schematic diagram S15b and Figure 7-31.

Tank

The Tank circuit serves as the collector load for the common base amplifier. Ignoring the parallel resistance, the capacitor and the inductor are tuned for resonance at 105.5 MHz.

The Tank circuit serves two purposes:

1. It ensure that the oscillator is tuned to the 5th harmonic of the series resonant crystal. The crystal within the oscillator loop has a fundamental resonant mode at 21.1 MHz. The crystal can potentially oscillate at any of the odd harmonics of this fundamental mode: that is, (21.1, 3(21.1), 5(21.1), 7(21.1), and so forth. The Tank circuit ensures that the common base amplifier, within the oscillator loop, has a gain greater than unity only at the crystal's fifth overtone (105.5 MHz). A gain greater than unity is necessary to ensure that oscillation starts.

2. It establishes the oscillator's open loop gain, with a corresponding phase shift. The open loop gain is directly proportional to the parallel resistance of the Tank. With a gain greater than unity, the oscillator "starts" when power is applied, and noise within the circuitry is amplified around the loop and the amplitude increases, limited only by a transistor's bias current or voltage. Once the loop reaches steady state (that is, the oscillation frequency and amplitude have been established), the loop's gain becomes unity and the phase shift around the loop is zero. The final frequency is a function of the crystal's resonant frequency, the crystal Q, the Tank's resonant frequency, and the Tank's Q. The loop's two transistors also contribute additional phase shift. The amount of phase shift from these transistors changes according to the oscillation amplitude and temperature.

Emitter Follower

The Emitter Follower following the Tank circuit acts as a current buffer between the Tank circuit and the crystal. The voltage amplitude at the collector of the transistor is set according to the current level of the transistor bias and the collector loading of the transistor. The Oscillator output, 105.5 MHz, ≈1 Vp-p drives both a divide-by-four block along with an amplifier of the 2110 MHz phase lock loop.

Crystal

The crystal within the oscillator loop acts as the stability device. It centers the oscillation frequency about the resonant frequency of the crystal's 5th overtone as mentioned earlier.

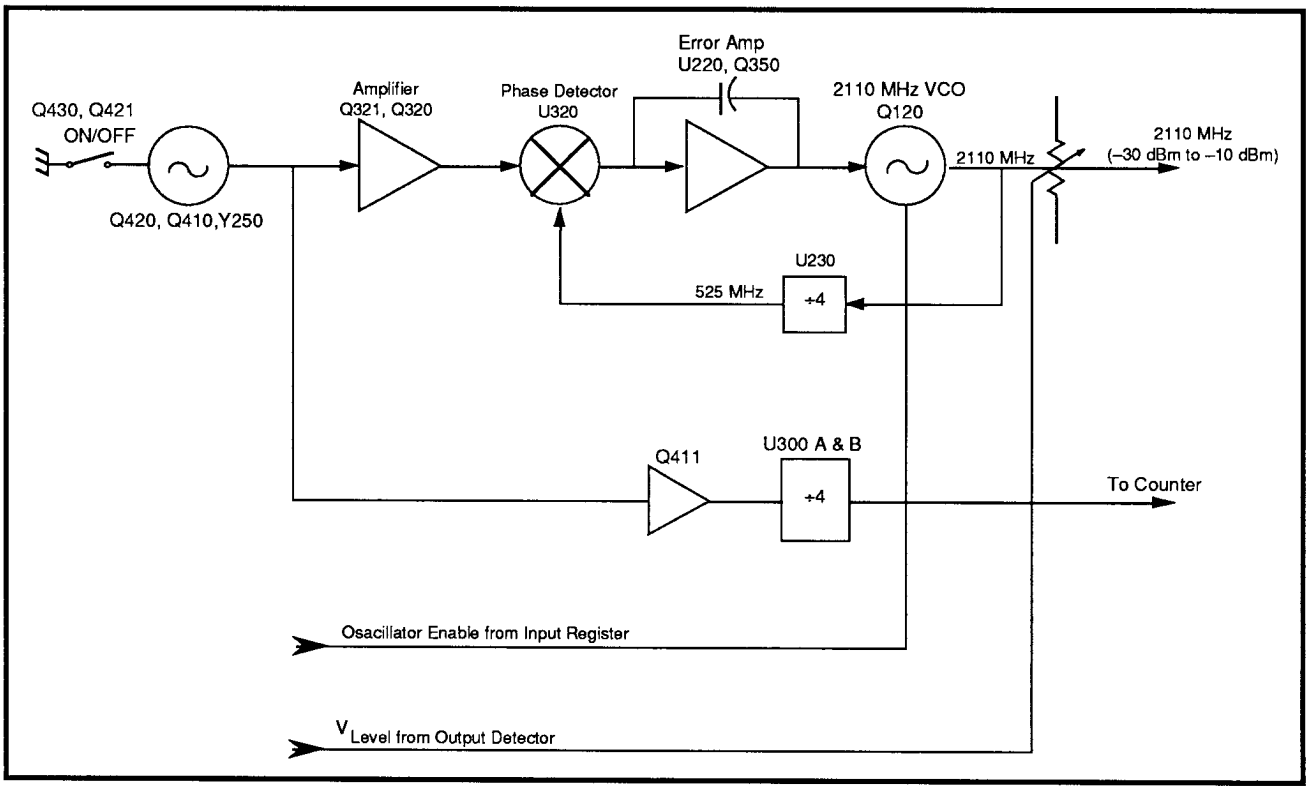

Figure 7-30. 2110 MHz Phase Lock Loop block diagram.

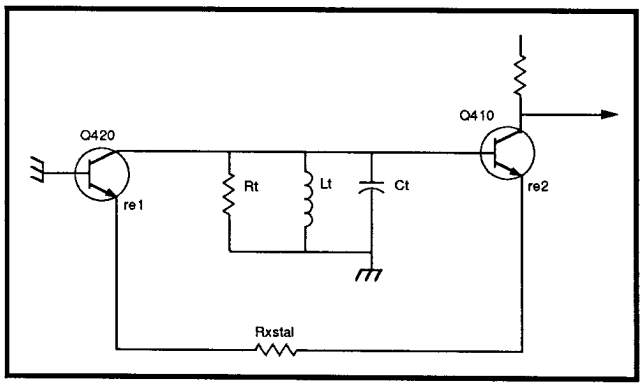

Figure 7-31. 105.5 MHz Oscillator AC equivalent.

The mechanical modes of the crystal, combined with piezoelectric devices, can be modeled as series LC with series resistance. The equivalent series resistance of the crystal also contributes to the loop's open loop gain when presented to the common base amplifier of the loop.

Common-Base Amplifier

The Common-Base Amplifier amplifies signals within the loop. At 105.5 MHz, the crystal and Tank circuit are at resonance; therefore, the reactive components can be ignored. The amplifier gain then approximates the ratio between the collector resistance and the emitter resistance. The collector resistance is the Tank circuit's resistor to ground. The emitter resistor is (Rxstal + re1 + re2) – the crystal's series equivalent resistance, the output resistance of the emitter follower transistor, and the "re" (input) resistance of the common base amplifier. See Figure 7-31.

Varactor Diodes

With the oscillator loop complete, an oscillation frequency would correspond to the crystal's resonant frequency; however, in order to tune the frequency, varactors are placed in series with the crystal. The varactor capacitance changes as a function of voltage. This capacitance change, in turn, alters the phase shift around the loop. The phase shift maintains a

zero degree phase shift around the loop. The VCO receives the tune voltage, a voltage between +8 V and –8 V, from the Interface board.

100 MHz AMPLIFIER

The Crystal Oscillator output (105.5 MHz at ≈1 Vp–p) drives the PLL module. The 105.5 MHz signal is routed to a differential amplifier composed of Q310 and Q320 and associated circuitry. The output of the amplifier feeds the PLL's Phase Detector.

PHASE DETECTOR

Assembly U210 is a mixer being used as a phase detector. The switching of the mixer's diode generates a fifth harmonic of the 105.5 MHz driving signal. By mixing the 5th harmonic of the crystal oscillator (527.5 MHz) with the 4th subharmonic of the 2110 MHz VCO [527.5 MHz or (2110 MHz ÷ 4)], the phase detector produces a DC level that is proportional to the phase difference between the two input signals.

ERROR AMPLIFIER

Operational amplifier U220 and an output current buffer Q150 make up the Error Amplifier. The output of the Phase Detector drives the Error Amplifier. The amplifier integrates the detector's error voltage and generates a tune voltage for the 2110 MHz VCO. Start-up circuit C231, CR230, CR240, and associated resistors (located between the operational amplifier and the transistor that forms the Error Amplifier) keeps the tune voltage set high at power-up by holding the Error Amplifier control loop open. After power-up, the start-up circuit gradually releases the control loop.

2110 MHz VCO

The tune voltage from the Error Amplifier changes the collector voltage of Q160, the oscillator transistor. As the voltage changes, the transistor's collector to base capacitance changes accordingly. As the voltage increases, the capacitance decreases. This change in capacitance changes the reactance that the negative-resistance, one-port transistor presents to the "resonating" element, resulting in a change in the oscillator frequency.

The 2110 MHz VCO output, approximately 0 dBm, is routed to a variable attenuator through a 12-dB coupler. The 12-dB coupler couples enough power to drive a ÷4 IC. The IC divides 2110 MHz by 4 to produce 527.5 MHz at an amplitude of ≈–4 dBm. This 527.5 MHz signal is routed to the Phase Detector where its phase is compared with the 5th harmonic of the Crystal Oscillator; thus completing the loop around the phase lock loop.

VARIABLE ATTENUATOR

The PIN diode attenuator CR270 attenuates the 2110 MHz signal, then routes the signal off the board to drive the Down Converter. The attenuation, 0.5 to 13 dB, is proportional to the control voltage, VLevel, from the Output Detector. This voltage-variable attenuator is a part of the leveling control loop. A detector on another module senses the output power and adjusts the variable attenuator to obtain the desired output amplitude. The attenuator has an adjustment range of approximately 12 dB. The 2110 MHz signal leaves the PLL module at an amplitude between –30 dBm to –10 dBm.

SUPPLIES

The total power consumption is ≈1.5 W. The following power supply conditions are maintained. Current values are typical.

Supply	Current	Maximum Ripple
+15 V	30 mA	1.2 mVp–p
+9 V	35 mA	1.2 mVp–p
+5 V	26 mA	8.0 mVp–p
–9 V	63 mA	2.4 mVp–p

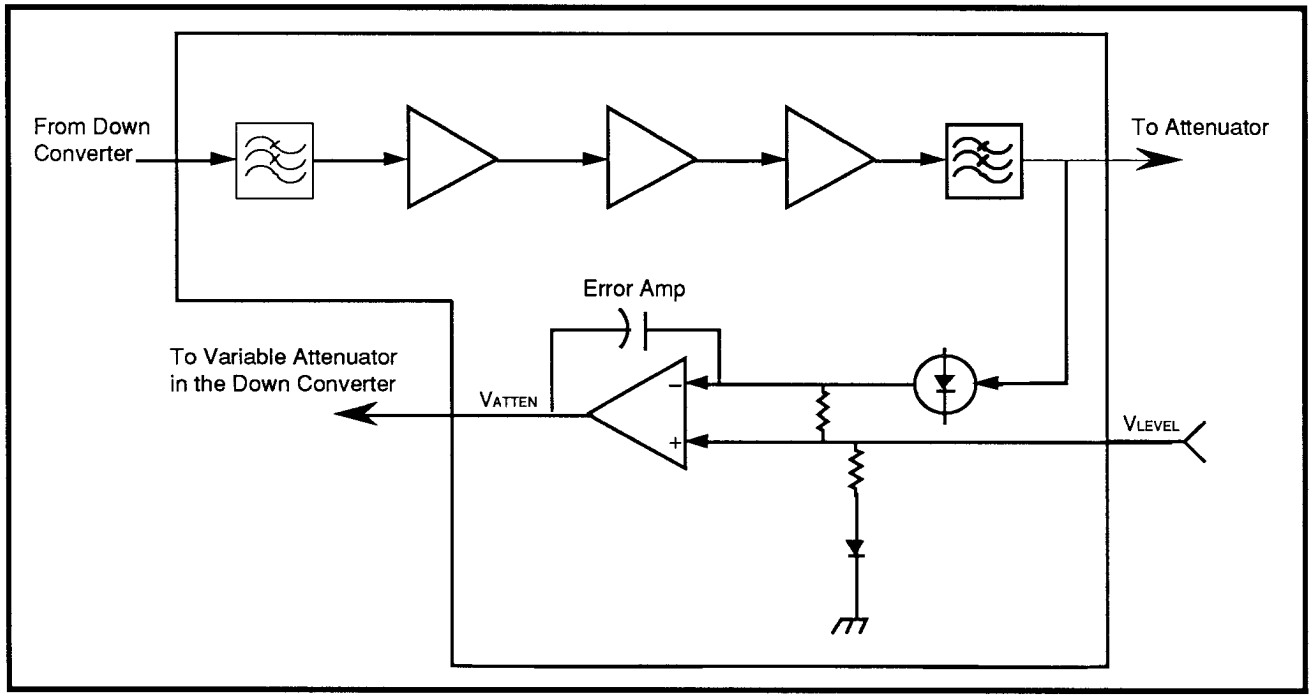

Figure 7-32. RF Amplifiers block diagram.

TG AMPLIFIER S15 c

The TG Amplifier module gets its signal (100 kHz to 1.8 GHz) from the RF mixer and performs the following three functions:

- Filters out signals above 1.8 GHz
- Amplifies the signal
- Detects the output signal amplitude to develop an amplitude correction voltage for the leveling loop

See Figure 7-32.

GENERAL DESCRIPTION

The module consists of three cascaded amplifiers. The input signal (100 kHz to 1.8 GHz) passes through a 1.8 GHz low-pass filter into the first amplifier at a power level between –25 dBm and –40 dBm. The filter is a distributed element designed to retard the 2.110 GHz-to-3.910 GHz LO signal, thus preventing it from entering the amplifier stage.

The first three amplifier stages are monolithic, silicon integrated circuits (ICs) with approximately 10 dB of gain each. Because of output power limitations of the ICs, the final amplifier stage is a discrete silicon bipolar amplifier. It has approximately 9 dB of gain with a 1 dB output power compression point at +12 dBm. The total gain of the four stages is approximately 39 dB with at least 10 dBm of output power.

The signal passes though a printed, five-pole filter to reduce any high-frequency harmonics that may be generated by the amplifiers. It has an insertion loss of less than 0.5 dB at 1.8 GHz and approximately 10 dB at 3 GHz.

The amplified signal is routed to a peak detector whose output then goes to an error amplifier that compares the detected signal to a reference voltage provided by the interface board. The peak detector senses only the forward power but not reflected or reverse power; the power loss through the detector is 6 dB. The forward power is load-independent. The error amplifier is also connected to, and provides a bias current for a temperature compensation diode for the detector diode. The detector output is sent to the leveling attenuator

on the 2110 MHz Phase Lock Loop board through the interface board.

The total gain for the complete module from 100 kHz to 1.8 GHz is 32 dB, and the output power is at least +4 dBm.

BIASING

The first three stages of the amplifier use a +9 V supply. The final output stage uses a +15 V supply. A resistor and inductor connected to the output of each stage set the bias for the ICs. A wrap-around circuit using a PNP transistor is used to bias the final output stage. A –9 V supply is connected to the error amplifier.

ATTENUATOR

The output attenuator provides 0 dB – 48 dB of output power level adjustment in 4 dB steps. The Attenuator consists of Microprocessor-controlled relays that switch in pads of 4, 8, 16, and 20 dB. A current from the interface board switches the attenuators in and out to provide the whole range of attenuation.

A single pole triple throw switch is also provided in the Attenuator module for future use.

TG INTERFACE S15 d

INTRODUCTION

The TG Interface board provides a control path for the Microprocessor. The circuit board includes power supply regulators, Digital-to-Analog-Converters (DACs) for controlling frequency and amplitude, relay drivers for the output attenuator, along with a summing junction for the Leveling Loop's error amplifier.

The TG Interface board has the following five functional areas (see Figure 7-33):

- Input Registers
- Frequency Control
- Amplitude Control
- Power Supply Regulation
- Interconnecting

INPUT REGISTERS

The Microprocessor controls the operating conditions of the Tracking Generator through the Input Registers. Three serial-input/parallel-output (4094 CMOS) chips provide 24 control bits. The Tracking Generator requires 16 control bits as shown in Table 7-20.

The Microprocessor uses three control lines for loading the input registers. DATAO is the data line that the Microprocessor uses for sending out data. CLKO clocks the serial output data into the input of the registers. Once the stream of data has been delivered, the Microprocessor sets TGLATCH– low, which latches the serial input data to the register's parallel outputs for the TG Interface board. Two single pulse single shots control the timing required for loading data into the dual DAC. The first single shot controls the data set-up time delay. The second single shot determines how long the pulse will remain low. The sequence is triggered by the TGLATCH– signal.

FREQUENCY CONTROL

The Frequency Control circuitry generates a DC voltage for tuning the 105.5 MHz crystal oscillator frequency. A DAC and a buffer amplifier generate a tune voltage ranging between –5 V to 0 V. A second amplifier amplifies and offsets this tune voltage to produce a control voltage between –8.9 V and +9.4 V. This is sent to the crystal oscillator on the PLL board.

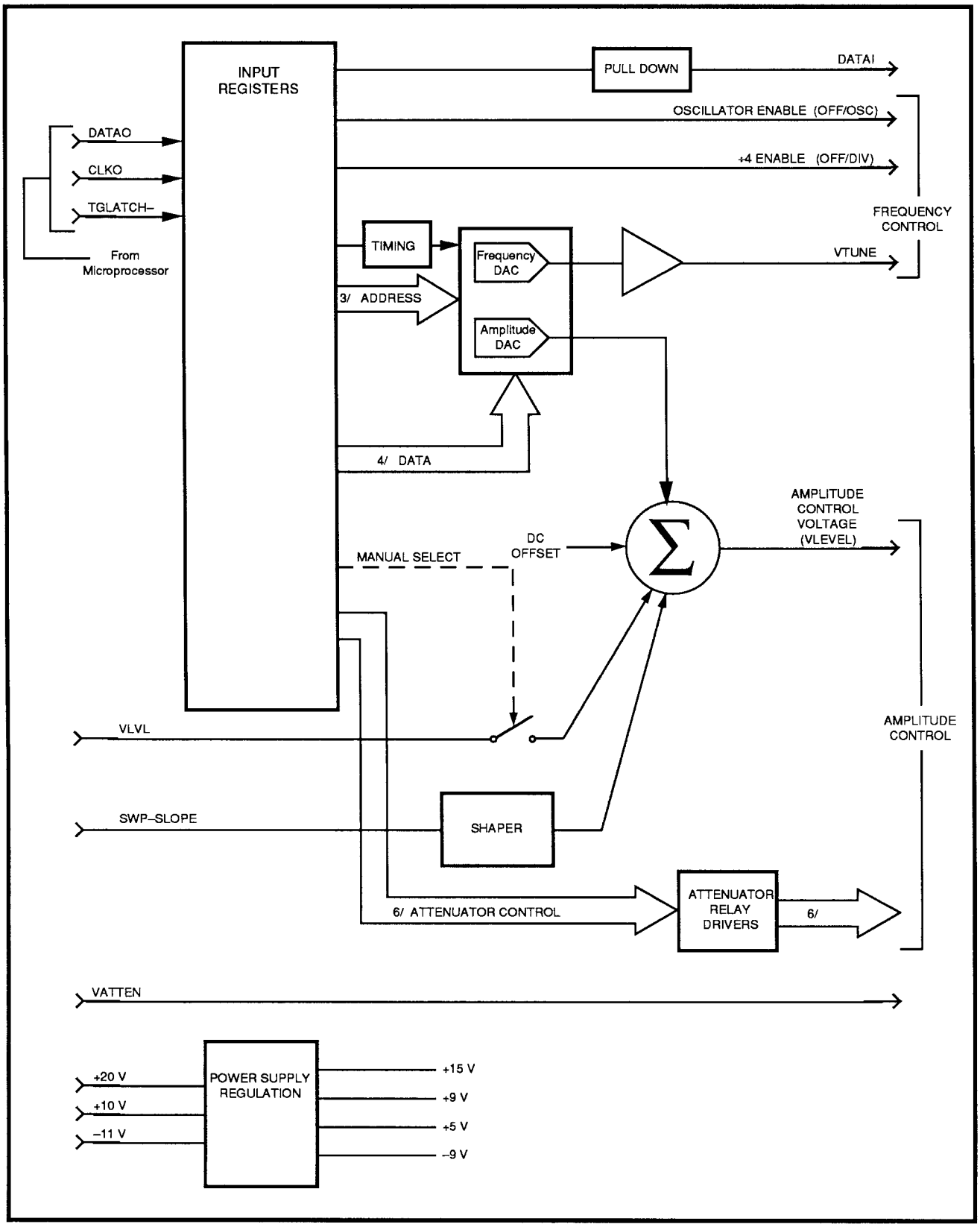

Figure 7-33. Tracking Generator Interconnect block diagram.

Table 7-20
CONTROL BITS

BIT	Name	Function
0	TG_check	Allows the Microprocessor to determine if the Tracking Generator module exists. When TG_check is set high, the instrument's DATAI line is pulled low, indicating that the Tracking Generator is present; otherwise, DATAI remains high.
1	Analog–	When set low, enables manual control of the Tracking Generator's output amplitude.
2 through 7		Not used
8	4/0 dB–	When set high, selects the 4 dB attenuator.
9	8/0 dB–	High enables the 8 dB output attenuator.
10	16/0 dB–	High enables the 16 dB output attenuator.
11	20/0 dB–	High enables the 20 dB output attenuator.
12		Future use
13		Future use
14	OscEn–	High turns off the Tracking Generator, Low enables the crystal oscillator in the 2110 MHz oscillator.
15	DivEn–	High disables the ÷4 IC. Low enables the divider which is used when counting the crystal oscillator.
16	DB0	Data bits for loading the amplitude & frequency control DAC's.
17	DB1	
18	DB2	
19	DB3	
20	A0	Address bits for loading the DAC's.
21	A1	
22	A2	
23	UPD–	When set low, updates both the Amplitude & Frequency DAC's simultaneously.

AMPLITUDE CONTROL

The output amplitude is varied in two ways: using a variable output attenuator and an analog control voltage. The analog control voltage is established according to the sum and weighting of four different voltages (a DAC voltage, a sweep voltage, an offset voltage, and a selectable manual control voltage). The summed result produces the control current for the Leveling Loop's error amplifier. The DAC voltage ranges between –5 V to 0 V. The offset voltage compensates for the residual DC voltage from the "sweep voltage shaper" and will also allow some bipolar capability with the control DAC. The sweep voltage, proportional to the instrument's 1st LO frequency, compensates for any attenuator frequency roll-off. When the Spectrum Analyzer is sweeping in Max Span, this voltage sweeps from +5 V to –5 V, proportional to the 1st LO's frequency. Before reaching the summing node, the sweep voltage passes through a shaper. The shaper clamps the

sweep voltage according to the offset frequency at which the output attenuator's frequency roll-off begins. The offset frequency and gain of the slope correction are both adjustable. The last voltage controlling the output amplitude is the selectable manual control. The front-panel LEVEL control produces a control voltage between –8 V and +8 V. The Microprocessor controls whether to sum this into the summing node. Concerning the weighting of the various inputs, the DAC needs approximately 6 dB of control over the output amplitude, while the sweep needs approximately 1.5 dB and the manual adjust approximately 3 dB (from the system non-flatness).

Additional amplitude attenuation is provided through the Tracking Generator's output attenuator. The Interface board controls the attenuator relays (within the programmable attenuator) by enabling or disabling the relay current drivers. The attenuator has 4 dB, 8 dB, 16 dB, and 20 dB attenuator steps. (Two other relays are available for future considerations.)

POWER SUPPLY REGULATION

The Interface board provides clean power supplies for the Tracking Generator. Line (60 Hz) and 20 kHz ripple levels of 0.1 V RMS are present in the +20 V, +10 V, and –11 V power supplies reaching the Tracking Generator. Four active regulators and a voltage reference re-regulate the supply voltages to +15 V, +9 V, +5 V, and –9 V. The power consumption is as follows:

Voltage	Current	Power
+20 V	74 mA	1.48 W
+10.8 V	660 mA	7.13 W
–11.4 V	130 mA	1.48 W

Total Power = 10.1 W

INTERCONNECTING

The final function the board provides is routing the error voltage (Vatten) from the Leveling Loop's error amplifier to the variable attenuator on the PLL board. The voltage ranges between –4 V and –2 V. These levels correspond to minimum and maximum attenuation, respectively.

ELECTRICAL PARTS — 2711

REPLACEABLE ELECTRICAL PARTS

PARTS ORDERING INFORMATION

Replacement parts are available from or through your local Tektronix, Inc. Field Office or representative.

Changes to Tektronix instruments are sometimes made to accommodate improved components as they become available, and to give you the benefit of the latest circuit improvements. It is therefore important, when ordering parts, to include the following information in your order: Part number, instrument type or number, serial number, and modification number if applicable.

Change information, if any, is located at the rear of this manual.

LIST OF ASSEMBLIES

A list of assemblies can be found at the beginning of the Electrical Parts List. The assemblies are listed in numerical order. When the complete component number of a part is known, this list will identify the assembly in which the part is located.

CROSS INDEX-MFR. CODE NUMBER TO MANUFACTURER

The Mfr. Code Number to Manufacturer Cross index for the Electrical Parts List is located immediately after this page. The Cross index provides codes, names and addresses of manufacturers of components listed in the Electrical Parts List.

ABBREVIATIONS

Abbreviations conform to American National Standard Y1.1.

COMPONENT NUMBER
(column one of the Electrical Parts List)

A numbering method has been used to identify assemblies, subassemblies and parts. Examples of this numbering method with an explanation of each follows.

Example a.

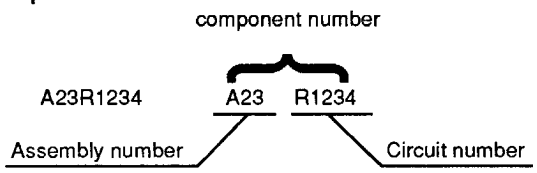

Read: Resistor 1234 of Assembly 23

Example b.

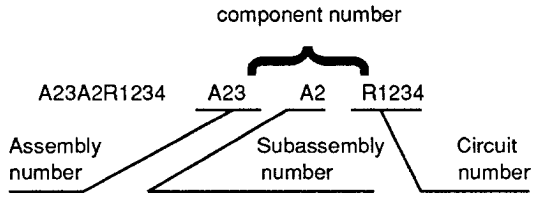

Read: Resistor 1234 of Subassembly 2 of Assembly 23

Only the circuit number appears on the diagrams and circuit board illustrations. Each diagram and circuit board illustration is clearly marked with the assembly number. Assembly numbers are also marked on the mechanical exploded views located in the Mechanical Parts List. The component number is obtained by adding the assembly number prefix to the circuit number.

The Electrical Parts List is divided and arranged by assemblies in numerical sequence (e.g. assembly A1 with its subassemblies and parts precedes assembly A2 with its subassemblies and parts).

Chassis-mounted parts have no assembly number prefix and are located at the end of the Electrical Parts List.

TEKTRONIX PART NO.
(column two of the Electrical Parts List)

Indicates part number to be used when ordering a replacement part from Tektronix.

SERIAL/MODEL NO.
(columns three and four of the Electrical Parts List)

Column three (3) indicates the serial number at which the part was first used. Column four (4) indicates the serial number at which the part was removed. No serial number entered indicates part is good for all serial numbers.

NAME & DESCRIPTION
(column five of the Electrical Parts List)

In the Parts List, an Item Name is separated from the description by a colon (:). Because of space limitations, an Item Name may sometimes appear as incomplete. For further Item Name identification, the U.S. Federal Cataloging Handbook H6-1 can be used where possible.

MFR. CODE
(column six of the Electrical Parts List)

Indicates the code number of the actual manufacturer of the part. (Code to name and address cross reference can be found immediately after this page.)

MFR. PART NUMBER
(column seven of the Electrical Parts List)

Indicates actual manufacturers part number.

CROSS INDEX - MFR. CODE NUMBER TO MANUFACTURER

Mfr. Code	Manufacturer	Address	City, State, Zip Code
00681	MINE SAFETY APPLIANCE CO CATALYST RESEARCH DIV	1421 CLARKVIEW RD	BALTIMORE MD 21209-2103
00779	AMP INC	2800 FULLING MILL PO BOX 3608	HARRISBURG PA 17105
01121	ALLEN-BRADLEY CO	1201 S 2ND ST	MILWAUKEE WI 53204-2410
01295	TEXAS INSTRUMENTS INC SEMICONDUCTOR GROUP	13500 N CENTRAL EXPY PO BOX 655012	DALLAS TX 75265
02113	COILCRAFT INC	1102 SILVER LAKE RD	CARY IL 60013-1658
02114	AMPEREX ELECTRONIC CORP FERROXCUBE DIV	5083 KINGS HWY	SAUGERTIES NY 12477
03508	GENERAL ELECTRIC CO SEMI-CONDUCTOR PRODUCTS DEPT	W GENESEE ST	AUBURN NY 13021
04222	AVX CERAMICS DIV OF AVX CORP	19TH AVE SOUTH P O BOX 867	MYRTLE BEACH SC 29577
04713	MOTOROLA INC SEMICONDUCTOR PRODUCTS SECTOR	5005 E MCDOWELL RD	PHOENIX AZ 85008-4229
05397	UNION CARBIDE CORP MATERIALS SYSTEMS DIV	11901 MADISON AVE	CLEVELAND OH 44101
07088	KELVIN ELECTRIC CO	5907 NOBLE AVE	VAN NUYS CA 91411
07716	TRW INC TRW IRC FIXED RESISTORS/BURLINGTON	2850 MT PLEASANT AVE	BURLINGTON IA 52601
0JR03	ZMAN AND ASSOCIATES	7633 S 180th	KENT WA 98032
11532	TELEDYNE RELAYS TELEDYNE INDUSTRIES INC SUB OF TELEDYNE INC	12525 DAPHNE AVE	HAWTHORNE CA 90250-3308
12020	OVENAIRE DIV OF ELECTRONIC TECHNOLOGIES INC	706 FORREST ST PO BOX 1528	CHARLOTTESVILLE VA 22901-4224
12697	CLAROSTAT MFG CO INC	LOWER WASHINGTON ST	DOVER NH 03820
14552	MICROSEMI CORP	2830 S FAIRVIEW ST	SANTA ANA CA 92704-5948
18324	SIGNETICS CORP MILITARY PRODUCTS DIV	4130 S MARKET COURT	SACRAMENTO CA 95834-1222
18612	VISHAY INTERTECHNOLOGY INC VISHAY RESISTOR PRODUCTS GROUP	63 LINCOLN HWY	MALVERN PA 19355-2120
19701	PHILIPS COMPONENTS DISCRETE PRODUCTS DIV RESISTIVE PRODUCTS FACILITY AIRPORT ROAD	PO BOX 760	MINERAL WELLS TX 76067-0760
22526	DU PONT E I DE NEMOURS AND CO INC DU PONT ELECTRONICS DEPT	515 FISHING CREEK RD	NEW CUMBERLAND PA 17070-3007
24165	SPRAGUE ELECTRIC CO	267 LOWELL ROAD	HUDSON NH 03051
24931	SPECIALTY CONNECTOR CO INC	2100 EARLYWOOD DR PO BOX 547	FRANKLIN IN 46131
25088	SIEMENS CORP	186 WOOD AVE S	ISELIN NJ 08830-2704
27014	NATIONAL SEMICONDUCTOR CORP	2900 SEMICONDUCTOR DR	SANTA CLARA CA 95051-0606
28480	HEWLETT-PACKARD CO CORPORATE HQ	3000 HANOVER ST	PALO ALTO CA 94304-1112
2M627	ROHM CORPORATION	PO BOX 19515	IRVINE CA 92713
31918	ITT SCHADOW INC	8081 WALLACE RD	EDEN PRAIRIE MN 55344-2224
32997	BOURNS INC TRIMPOT DIV	1200 COLUMBIA AVE	RIVERSIDE CA 92507-2114
33095	SPECTRUM CONTROL INC	2185 W WEIGHT ST	ERIE PA 16505
34630	K AND L/QUARTZTEK INC	3940 W MONTECITO	PHOENIX AZ 85019
50101	FREQUENCY SOURCES INC SEMICONDUCTOR DIV SUB OF LORAL CORP	16 MAPLE RD	CHELMSFORD MA 01824-3737
50140	K AND L MICROWAVE INC SUB OF DOVER CORP	408 COLES CIR	SALISBURY MD 21801-3214
50434	HEWLETT-PACKARD CO OPTOELECTRONICS DIV	370 W TRIMBLE RD	SAN JOSE CA 95131
51406	MURATA ERIE NORTH AMERICA INC HEADQUARTERS AND GEORGIA OPERATIONS	2200 LAKE PARK DR	SMYRNA GA 30080
51642	CENTRE ENGINEERING INC	2820 E COLLEGE AVE	STATE COLLEGE PA 16801-7515
52769	SPRAGUE-GOODMAN ELECTRONICS INC	134 FULTON AVE	GARDEN CITY PARK NY 11040-5352
54473	MATSUSHITA ELECTRIC CORP OF AMERICA	ONE PANASONIC WAY PO BOX 1501	SECAUCUS NJ 07094-2917
54583	TDK ELECTRONICS CORP	12 HARBOR PARK DR	PORT WASHINGTON NY 11550
54937	DEYOUNG MANUFACTURING INC	12920 NE 125TH WAY	KIRKLAND WA 98034-7716
55680	NICHICON /AMERICA/ CORP	927 E STATE PKY	SCHAUMBURG IL 60195-4526

CROSS INDEX - MFR. CODE NUMBER TO MANUFACTURER

Mfr. Code	Manufacturer	Address	City, State, Zip Code
57027	INTERNATIONAL RESISTIVE PRODUCTS INC	4222 S STAPLES	CORPUS CHRISTI TX 78411-2702
57668	ROHM CORP	8 WHATNEY PO BOX 19515	IRVINE CA 92713
58050	TEKA PRODUCTS INC	45 SALEM ST	PROVIDENCE RI 02907
59492	K AND L QUARTZTEK DIV OF K AND L MICROWAVE INC		
71400	BUSSMANN DIV OF COOPER INDUSTRIES INC	114 OLD STATE RD PO BOX 14460	ST LOUIS MO 63178
72982	ERIE SPECIALTY PRODUCTS INC	645 W 11TH ST	ERIE PA 16512
75498	MULTICOMP INC	3005 SW 154TH TERRACE #3	BEAVERTON OR 97006
80009	TEKTRONIX INC	14150 SW KARL BRAUN DR PO BOX 500	BEAVERTON OR 97077-0001
81073	GRAYHILL INC	561 HILLGROVE AVE PO BOX 10373	LA GRANGE IL 60525-5914
81483	INTERNATIONAL RECTIFIER	9220 SUNSET BLVD	LOS ANGELES CA 90069-3501
91637	DALE ELECTRONICS INC	2064 12TH AVE PO BOX 609	COLUMBUS NE 68601-3632
92966	GTE PRODUCTS CORP LIGHTING PRODUCTS GROUP HILLSBORO		
95275	VITRAMON INC	BOX 544	BRIDGEPORT CT 06601-0544
98291	SEALECTRO CORP BICC ELECTRONICS	40 LINDEMAN DR	TURNBULL CT 06611-4739
D5243	ROEDERSTEIN E SPEZIALFABRIK FUER KONDENSATOREN GMBN	LUDMILLASTRASSE 23-25	8300 LANDSHUT GERMANY
TK0146	BUEHLER PRODUCTS INC	PO BOX A HIGHWAY 70	EAST KINSTON NC 28501
TK0510	PANASONIC COMPANY DIV OF MATSUSHITA ELECTRIC CORP	ONE PANASONIC WAY	SECAUCUS NJ 07094
TK0515	ERICSSON COMPONENTS INC	403 INTERNATIONAL PKY PO BOX 853904	RICHARDSON TX 75085-3904
TK0768	SUPERTEX INC	1225 BORDEAUX DRIVE	SUNNYVALE CA 94086
TK0900	UNITED CHEMICON		
TK1345	ZMAN & ASSOCIATES		
TK1395	ROEDERSTEIN ELECTRONICS INC		
TK1424	MARCON AMERICA CORP		
TK1450	TOKYO COSMOS ELECTRIC CO LTD	2-268 SOBUDAI ZAWA	KANAGAWA 228 JAPAN
TK1869	ALPS	100 N CNTRE AVE	ROCKVILLE CENTRE NY 11570
TK2073	TOCOS AMERICA INC	565 W GULF ROAD	ARLINGTON HEIGHTS IL 60005
TK2469	UNITREK CORPORATION	3000 LEWIS & CLARK WAY SUITE #2	VANCOUVER WA 98601

Component No.	Tektronix Part No.	Serial/Assembly No. Effective	Dscont	Name & Description	Mfr. Code	Mfr. Part No.
A5	671-0974-03			CIRCUIT BD ASSY:SWEEP	80009	671-0974-03
A5	671-0794-04		B031399			
A5	671-0794-05	B041400				
A6	671-1923-01			CIRCUIT BD ASSY:FRONT PANEL	80009	671-1923-01
A7	671-1674-00	B010100	B010236	CIRCUIT BD ASSY:LOG AMP	80009	671-1674-00
A7	671-1674-01	B010237	B010325	CIRCUIT BD ASSY:LOG AMP	80009	671-1674-01
A7	671-1674-02	B010326		CIRCUIT BD ASSY:LOG AMP	80009	671-1674-02
A9	670-9468-01	B010100	B010161	CIRCUIT BD ASSY:DIGITAL STORAGE	80009	670-9468-01
A9	670-9468-02	B010162	B010213	CIRCUIT BD ASSY:DIGITAL STORAGE	80009	670-9468-02
A9	670-9468-03	B010214		CIRCUIT BD ASSY:DIGITAL STORAGE	80009	670-9468-03
A10	671-0653-14			CIRCUIT BD ASSY:MICROPROCESSOR	80009	671-0653-14
A11	671-1858-01			CIRCUIT BD ASSY:RS232	80009	671-1858-01
A12	672-1284-04	B010100	B010247	CIRCUIT BD ASSY:PHASELOCK CFC MODULE	80009	672-1284-04
A12	672-1284-05	B010248		CIRCUIT BD ASSY:PHASELOCK CFC MODULE	80009	672-1284-05
A12A1	----- -----			(PART OF A12) PHASELOCK CF CONTROL		
A12A2	----- -----			(PART OF A12) HIGH FREQ VCO		
A12A3	----- -----			(PART OF A12) LOW FREQUENCY		
A13	670-9475-03	B010100	B010177	CIRCUIT BD ASSY:VR W/SMD	80009	670-9475-03
A13	670-9475-04	B010178		CIRCUIT BD ASSY:VARIABLE RESOLUTION	80009	670-9475-04
A14	672-1308-00	B010100	B010119	CIRCUIT BD ASSY:RF MOM	80009	672-1308-00
A14	672-1308-01	B010120		CIRCUIT BD ASSY:RF MOM	80009	672-1308-01
A14	672-1308-02					
A14	672-1308-03					
A14	672-1308-04		B031330			
A14	672-1308-05	B031331				
A14A1				CIRCUIT BD ASSY:RF MOM (PART OF A14)	80009	671-1196-02
A14A2	671-1197-00	B010100	B010266	CIRCUIT BD ASSY:LOCKED 2ND LO	80009	671-1197-00
A14A2	671-1197-01	B010120		CIRCUIT BD ASSY:LOCKED 2ND LO	80009	671-1197-01
A15	621-0083-01	B010100	B010203	POWER SUPPLY:CIRCUIT BOARD,7 CHASSIS	80009	621-0083-01
A15	621-0083-02	B010204	B010296	POWER SUPPLY:CIRCUIT BOARD,7 CHASSIS	80009	621-0083-02
A15	621-0083-03	B010267		POWER SUPPLY:CIRCUIT BOARD 7 CHASSIS	80009	621-0083-03
A15	621-0083-04	B0xxxxx		POWER SUPPLY: CIRCUIT BOARD 7 CHASSIS	80009	621-0083-04
A15	621-0083-05	B0xxxxx		POWER SUPPLY: CIRCUIT BOARD 7 CHASSIS	80009	621-0083-05
A15	621-0083-06	B0xxxxx	B020617	POWER SUPPLY: CIRCUIT BOARD 7 CHASSIS	80009	621-0083-06
A15	621-0083-07	B020618	B020758	POWER SUPPLY: CIRCUIT BOARD 7 CHASSIS	80009	621-0083-07
A15	621-0083-08	B020759		POWER SUPPLY: CIRCUIT BOARD 7 CHASSIS	80009	621-0083-08
A15	621-0083-09	B020759	B020815	POWER SUPPLY: CIRCUIT BOARD 7 CHASSIS	80009	621-0083-09
A15	621-0083-10	B020816	B021116	POWER SUPPLY: CIRCUIT BOARD 7 CHASSIS	80009	621-0083-10
A15	621-0083-11	B021117	B021146	POWER SUPPLY: CIRCUIT BOARD 7 CHASSIS	80009	621-0083-11
A15	621-0083-12	B021147	B031299	POWER SUPPLY: CIRCUIT BOARD 7 CHASSIS	80009	621-0083-12
A15	621-0083-13	B031300	B031399	POWER SUPPLY: CIRCUIT BOARD 7 CHASSIS	80009	621-0083-13
A15	621-0083-14	B041400				
A15A1	----- -----			(PART OF A15)		
A16	119-2568-04			1ST CONVERTER A:	80009	119-2568-04
A16A1	----- -----			CIRCUIT BD ASSY:1ST CONVERTER		
A16A2	----- -----			CIRCUIT BD ASSY: 1ST MIXER INPUT		
A17	119-2301-05	B010100	B010155	YIG BUFFER ASSY:	80009	119-2301-05
A17	119-2301-06	B010156		YIG BUFFER ASSY:2712	80009	119-2301-06
A17A1	----- -----			CIRCUIT BD ASSY:YIG BUFFER AMPLIFIER		
A18	672-1297-00	B010100	B010120	CIRCUIT BD ASSY:RF ATTN	80009	672-1297-00
A18	672-1297-01	B010121		CIRCUIT BD ASSY:RF ATTN	80009	672-1297-01
A18A1	----- -----			(PART OF A18) DIGITAL CONTROL		
A18A2	----- -----			(PART OF A18) RF		
A19	119-2206-00			OSCILLATOR,RF:1.9 TO 4.0 GHZ	80009	119-2206-00
A19A1	----- -----			CIRCUIT BD ASSY:YIG INTERFACE (PART OF A19)		
A21	670-9470-01			CIRCUIT BD ASSY:REFERENCE OSC (OPT 4 ONLY)	80009	670-9470-01
A21	670-9470-02		B031399			
A21	670-9470-03	B041400				
A24	119-3889-00	B010100	B010344	TRACK GEN ASSY:ISO AMP,RF AMP,TG PHASE LL	80009	119-3889-00
A24	119-3889-01	B010345		TRACKING GEN AS:ISO AMP,RF AMP,TG PHASE LL	80009	119-3889-01
A24	119-3889-02					
A24	119-3889-03					
A24	119-3889-04					
A24	119-3889-05		B031399			
A24	119-3889-06	B041400				
A24A1	671-1547-01		B031399	CIRCUIT BD ASSY:TG INTERFACE	80009	671-1547-01
A24A1	671-1547-02	B041400				
A24A2	671-1544-00			CIRCUIT BD ASSY:TG PHASE LOCK LOOP	80009	671-1544-00
A24A3	671-1543-00			CIRCUIT BD ASSY:TG ISOLATION AMP	80009	671-1543-00
A24A4	671-1541-00			CIRCUIT BD ASSY:TG RF AMPLIFIER	80009	671-1541-00
A25	671-1859-01			CIRCUIT BD ASSY:GPIB (OPT 3 ONLY)	80009	671-1859-01
A5	671-0974-03			CIRCUIT BD ASSY:SWEEP	80009	671-0974-03
A5C130	290-0944-00			CAP,FXD,ELCTLT:220UF,+50-20%,10V (MATCHED SET WITH A5C840)	55680	UVX1C221MPA
A5C150	283-0645-00			CAP,FXD,MICA DI:790PF,1%,300V	80009	283-0645-00

Component No.	Tektronix Part No.	Serial/Assembly No. Effective	Dscont	Name & Description	Mfr. Code	Mfr. Part No.
A5C161	283-5004-00			CAP,FXD,CER DI:0.1UF,10%,25V	80009	283-5004-00
A5C165	283-0672-00			CAP,FXD,MICA DI:200PF,1%,500V	80009	283-0672-00
A5C176	283-5004-00			CAP,FXD,CER DI:0.1UF,10%,25V	80009	283-5004-00
A5C210	283-5004-00			CAP,FXD,CER DI:0.1UF,10%,25V	80009	283-5004-00
A5C220	283-5002-00			CAP,FXD,CER DI:1000PF,10%,50V	80009	283-5002-00
A5C230	283-5001-00			CAP,FXD,CER DI:100PF,5%,50V	80009	283-5001-00
A5C231	283-5004-00			CAP,FXD,CER DI:0.1UF,10%,25V	80009	283-5004-00
A5C252	283-5001-00			CAP,FXD,CER DI:100PF,5%,50V	80009	283-5001-00
A5C253	290-5039-00			CAP,FXD,ALUM:10UF,20%,50V,6.3MM,SMD,16MM TA	80009	290-5039-00
A5C262	283-5004-00			CAP,FXD,CER DI:0.1UF,10%,25V	80009	283-5004-00
A5C310	283-5004-00			CAP,FXD,CER DI:0.1UF,10%,25V	80009	283-5004-00
A5C311	283-5004-00			CAP,FXD,CER DI:0.1UF,10%,25V	80009	283-5004-00
A5C322	283-5004-00			CAP,FXD,CER DI:0.1UF,10%,25V	80009	283-5004-00
A5C383	283-5004-00			CAP,FXD,CER DI:0.1UF,10%,25V	80009	283-5004-00
A5C384	283-5004-00			CAP,FXD,CER DI:0.1UF,10%,25V	80009	283-5004-00
A5C391	283-5004-00			CAP,FXD,CER DI:0.1UF,10%,25V	80009	283-5004-00
A5C410	283-5004-00			CAP,FXD,CER DI:0.1UF,10%,25V	80009	283-5004-00
A5C420	283-5004-00			CAP,FXD,CER DI:0.1UF,10%,25V	80009	283-5004-00
A5C421	283-5002-00			CAP,FXD,CER DI:1000PF,10%,50V	80009	283-5002-00
A5C430	283-5004-00			CAP,FXD,CER DI:0.1UF,10%,25V	80009	283-5004-00
A5C431	283-5004-00			CAP,FXD,CER DI:0.1UF,10%,25V	80009	283-5004-00
A5C475	283-5001-00			CAP,FXD,CER DI:100PF,5%,50V	80009	283-5001-00
A5C531	290-0944-00			CAP,FXD,ELCTLT:220UF,+50-20%,10V	55680	UVX1C221MPA
A5C553	283-5004-00			CAP,FXD,CER DI:0.1UF,10%,25V	80009	283-5004-00
A5C563	283-5004-00			CAP,FXD,CER DI:0.1UF,10%,25V	80009	283-5004-00
A5C564	283-5004-00			CAP,FXD,CER DI:0.1UF,10%,25V	80009	283-5004-00
A5C582	283-5004-00			CAP,FXD,CER DI:0.1UF,10%,25V	80009	283-5004-00
A5C583	283-5004-00			CAP,FXD,CER DI:0.1UF,10%,25V	80009	283-5004-00
A5C592	283-5004-00			CAP,FXD,CER DI:0.1UF,10%,25V	80009	283-5004-00
A5C611	283-5004-00			CAP,FXD,CER DI:0.1UF,10%,25V	80009	283-5004-00
A5C621	283-5004-00			CAP,FXD,CER DI:0.1UF,10%,25V	80009	283-5004-00
A5C631	283-5004-00			CAP,FXD,CER DI:0.1UF,10%,25V	80009	283-5004-00
A5C662	290-5039-00			CAP,FXD,ALUM:10UF,20%,50V,6.3MM,SMD,16MM TA PE & REEL.	80009	290-5039-00
A5C691	283-5004-00			CAP,FXD,CER DI:0.1UF,10%,25V	80009	283-5004-00
A5C720	290-0944-00			CAP,FXD,ELCTLT:220UF,+50-20%,10V	55680	UVX1C221MPA
A5C751	283-5002-00			CAP,FXD,CER DI:1000PF,10%,50V	80009	283-5002-00
A5C761	283-5004-00			CAP,FXD,CER DI:0.1UF,10%,25V	80009	283-5004-00
A5C762	283-5002-00			CAP,FXD,CER DI:1000PF,10%,50V	80009	283-5002-00
A5C773	283-5004-00			CAP,FXD,CER DI:0.1UF,10%,25V	80009	283-5004-00
A5C774	283-5002-00			CAP,FXD,CER DI:1000PF,10%,50V	80009	283-5002-00
A5C775	283-5002-00			CAP,FXD,CER DI:1000PF,10%,50V	80009	283-5002-00
A5C781	281-0267-00			CAP,VAR,CERAMIC:6-50PF,50V	80009	281-0267-00
A5C782	283-5008-00			CAP,FXD,CER DI:12PF,5%,50V	54583	C3216C0G1H120J
A5C790	283-5004-00			CAP,FXD,CER DI:0.1UF,10%,25V	80009	283-5004-00
A5C840	295-0199-00		B031399	CAP SET,MATCHED:(1) 10UF,1.5%,25V,(1) 0.1UF ,1.5%,100V,MATCHED (MATCHED SET WITH A5C130)	80009	295-0199-00
A5C840	295-0199-01	B041400				
A5C841	283-5004-00		B031399	CAP,FXD,CER DI:0.1UF,10%,25V	80009	283-5004-00
A5C841	295-0199-01	B041400				
A5C842	283-5004-00		B031399	CAP,FXD,CER DI:0.1UF,10%,25V	80009	283-5004-00
A5C842	295-0199-01	B041400				
A5C843	283-5004-00		B031399	CAP,FXD,CER DI:0.1UF,10%,25V	80009	283-5004-00
A5C843	295-0199-01	B041400				
A5C844	283-5004-00		B031399	CAP,FXD,CER DI:0.1UF,10%,25V	80009	283-5004-00
A5C844	295-0199-01	B041400				
A5C845	295-0199-00		B031399	CAP SET,MATCHED:(1) 10UF,1.5%,25V,(1) 0.1UF ,1.5%,100V,MATCHED	80009	295-0199-00
A5C845	295-0199-01	B041400				
A5C860	283-5004-00			CAP,FXD,CER DI:0.1UF,10%,25V	80009	283-5004-00
A5C870	283-5004-00			CAP,FXD,CER DI:0.1UF,10%,25V	80009	283-5004-00
A5C871	283-5004-00			CAP,FXD,CER DI:0.1UF,10%,25V	80009	283-5004-00
A5C872	283-5004-00			CAP,FXD,CER DI:0.1UF,10%,25V	80009	283-5004-00

Component No.	Tektronix Part No.	Serial/Assembly No. Effective	Dscont	Name & Description	Mfr. Code	Mfr. Part No.
A5C880	283-5004-00			CAP,FXD,CER DI:0.1UF,10%,25V	80009	283-5004-00
A5C940	283-5004-00			CAP,FXD,CER DI:0.1UF,10%,25V	80009	283-5004-00
A5C941	283-5004-00			CAP,FXD,CER DI:0.1UF,10%,25V	80009	283-5004-00
A5C960	283-5004-00			CAP,FXD,CER DI:0.1UF,10%,25V	80009	283-5004-00
A5C961	283-5004-00			CAP,FXD,CER DI:0.1UF,10%,25V	80009	283-5004-00
A5C970	283-5004-00			CAP,FXD,CER DI:0.1UF,10%,25V	80009	283-5004-00
A5C971	283-5004-00			CAP,FXD,CER DI:0.1UF,10%,25V	80009	283-5004-00
A5CR212	152-5004-00			DIODE,SIG:,ULTRA FAST;70V,0.15A,6NS,SER-PAI R;BAV99,SOT-23,8MM TR	25088	BAV99T
A5CR361	152-5004-00			DIODE,SIG:,ULTRA FAST;70V,0.15A,6NS,SER-PAI R;BAV99,SOT-23,8MM TR	25088	BAV99T
A5CR373	152-5004-00			DIODE,SIG:,ULTRA FAST;70V,0.15A,6NS,SER-PAI R;BAV99,SOT-23,8MM TR	25088	BAV99T
A5CR461	152-5004-00			DIODE,SIG:,ULTRA FAST;70V,0.15A,6NS,SER-PAI R;BAV99,SOT-23,8MM TR	25088	BAV99T
A5CR462	152-5004-00			DIODE,SIG:,ULTRA FAST;70V,0.15A,6NS,SER-PAI R;BAV99,SOT-23,8MM TR	25088	BAV99T
A5DS200	150-0097-00			LAMP,INCAND:6.3V,0.2A,#7381,WIRE LEADS	92966	7381
A5DS500	150-0097-00			LAMP,INCAND:6.3V,0.2A,#7381,WIRE LEADS	92966	7381
A5DS700	150-0097-00			LAMP,INCAND:6.3V,0.2A,#7381,WIRE LEADS	92966	7381
A5J480	131-2514-00			CONN,HDR::	00779	86479-1
A5J750	131-0265-00			CONN,RF PLUG::SMB,PCB,MALE,RTANG,50 OHM,0.3 81 H X 0.150 TAIL,0.043 DIA CTR COND,0.040 SQ TAIL	80009	131-0265-00
A5L783	108-5001-00			COIL,RF:FXD,70NH,+/-5%,Q=35,SRF 900MHZ, DCR 0.55 OHM, I MAX	80009	108-5001-00
A5L890	108-1262-00			COIL,RF:FXD,100UH,10%,Q=30,SRF 8.2MHZ,DCR 0 .23 OHM,I MAX 0.75ARADIAL LEAD	80009	108-1262-00
A5Q255	151-5001-00			TRANSISTOR,SIG:BIPOLAR,NPN;40V,200MA,300MHZ ,AMPLIFIER;MMBT3904L,TO-236/SOT-23,8MM T&R	80009	151-5001-00
A5Q351	151-5001-00			TRANSISTOR,SIG:BIPOLAR,NPN;40V,200MA,300MHZ ,AMPLIFIER;MMBT3904L,TO-236/SOT-23,8MM T&R	80009	151-5001-00
A5Q574	151-5001-00			TRANSISTOR,SIG:BIPOLAR,NPN;40V,200MA,300MHZ ,AMPLIFIER;MMBT3904L,TO-236/SOT-23,8MM T&R	80009	151-5001-00
A5Q663	151-5002-00			TRANSISTOR,SIG:JFET,N-CH;5V,75MA,60 OHM,SWI TCH;MMBF4392L,SOT-23,8MM T&R	80009	151-5002-00
A5Q664	151-5000-00			TRANSISTOR,SIG:BIPOLAR,PNP;40V,200MA,250MHZ ,AMPLIFIER;MMBT3906L,TO-236/SOT-23,8MM T&R	04713	MMBT3906LT1
A5Q685	151-5001-00			TRANSISTOR,SIG:BIPOLAR,NPN;40V,200MA,300MHZ ,AMPLIFIER;MMBT3904L,TO-236/SOT-23,8MM T&R	80009	151-5001-00
A5Q706	151-5001-00			TRANSISTOR,SIG:BIPOLAR,NPN;40V,200MA,300MHZ ,AMPLIFIER;MMBT3904L,TO-236/SOT-23,8MM T&R	80009	151-5001-00
A5Q707	151-5000-00			TRANSISTOR,SIG:BIPOLAR,PNP;40V,200MA,250MHZ ,AMPLIFIER;MMBT3906L,TO-236/SOT-23,8MM T&R	04713	MMBT3906LT1
A5R140	321-5017-00			RES,FXD:METAL FILM;825 OHM,1%,0.125W,TC=100 PPM;1206,T&R	80009	321-5017-00
A5R141	321-5047-00			RES,FXD:METAL FILM;100K OHM,1%,0.125W,TC=10 0 PPM;1206,T&R	80009	321-5047-00
A5R142	321-5047-00			RES,FXD:METAL FILM;100K OHM,1%,0.125W,TC=10 0 PPM;1206,T&R	80009	321-5047-00
A5R150	321-5047-00			RES,FXD:METAL FILM;100K OHM,1%,0.125W,TC=10 0 PPM;1206,T&R	80009	321-5047-00
A5R171	321-5049-00			RES,FXD:METAL FILM;1M OHM,1%,0.125W,TC=100 PPM;1206,T&R	80009	321-5049-00
A5R172	321-5041-00			RES,FXD:METAL FILM;82.5K OHM,1%,0.125W,TC=1 00 PPM;1206,T&R	80009	321-5041-00
A5R173	321-5035-00			RES,FXD:METAL FILM;27.4K OHM,1%,0.125W,TC=1 00 PPM;1206,T&R	80009	321-5035-00

Component No.	Tektronix Part No.	Serial/Assembly No. Effective	Dscont	Name & Description	Mfr. Code	Mfr. Part No.
A5R174	321-5041-00			RES,FXD:METAL FILM;82.5K OHM,1%,0.125W,TC=100 PPM;1206,T&R	80009	321-5041-00
A5R175	321-5041-00			RES,FXD:METAL FILM;82.5K OHM,1%,0.125W,TC=100 PPM;1206,T&R	80009	321-5041-00
A5R177	321-5047-00			RES,FXD:METAL FILM;100K OHM,1%,0.125W,TC=100 PPM;1206,T&R	80009	321-5047-00
A5R180	321-5047-00			RES,FXD:METAL FILM;100K OHM,1%,0.125W,TC=100 PPM;1206,T&R	80009	321-5047-00
A5R181	321-5047-00			RES,FXD:METAL FILM;100K OHM,1%,0.125W,TC=100 PPM;1206,T&R	80009	321-5047-00
A5R182	321-5047-00			RES,FXD:METAL FILM;100K OHM,1%,0.125W,TC=100 PPM;1206,T&R	80009	321-5047-00
A5R183	321-5047-00			RES,FXD:METAL FILM;100K OHM,1%,0.125W,TC=100 PPM;1206,T&R	80009	321-5047-00
A5R184	321-5047-00			RES,FXD:METAL FILM;100K OHM,1%,0.125W,TC=100 PPM;1206,T&R	80009	321-5047-00
A5R185	321-5047-00			RES,FXD:METAL FILM;100K OHM,1%,0.125W,TC=100 PPM;1206,T&R	80009	321-5047-00
A5R186	321-5048-00			RES,FXD:METAL FILM;332K OHM,1%,0.125W,TC=100 PPM;1206,T&R	80009	321-5048-00
A5R190	321-5048-00			RES,FXD:METAL FILM;332K OHM,1%,0.125W,TC=100 PPM;1206,T&R	80009	321-5048-00
A5R200	321-5018-00			RES,FXD:METAL FILM;1.0K OHM,1%,0.125W,TC=100 PPM;1206,T&R	80009	321-5018-00
A5R201	321-5047-00			RES,FXD:METAL FILM;100K OHM,1%,0.125W,TC=100 PPM;1206,T&R	80009	321-5047-00
A5R213	321-5047-00			RES,FXD:METAL FILM;100K OHM,1%,0.125W,TC=100 PPM;1206,T&R	80009	321-5047-00
A5R221	321-5037-00			RES,FXD:METAL FILM;39.2K OHM,1%,0.125W,TC=100 PPM;1206,T&R	80009	321-5037-00
A5R222	321-5038-00			RES,FXD:METAL FILM;47.5K OHM,1%,0.125W,TC=100 PPM;1206,T&R	80009	321-5038-00
A5R232	321-5018-00			RES,FXD:METAL FILM;1.0K OHM,1%,0.125W,TC=100 PPM;1206,T&R	80009	321-5018-00
A5R233	321-5022-00			RES,FXD:METAL FILM;2.21K OHM,1%,0.125W,TC=100 PPM;1206,T&R	80009	321-5022-00
A5R240	321-5030-00			RES,FXD:METAL FILM;10.0K OHM,1%,0.125W,TC=100 PPM;1206,T&R	80009	321-5030-00
A5R251	321-5030-00			RES,FXD:METAL FILM;10.0K OHM,1%,0.125W,TC=100 PPM;1206,T&R	80009	321-5030-00
A5R270	321-5025-00			RES,FXD:METAL FILM;3.92K OHM,1%,0.125W,TC=100 PPM;1206,T&R	80009	321-5025-00
A5R272	321-5005-00			RES,FXD:METAL FILM;27.4 OHM,1%,0.125W,TC=100 PPM;1206,T&R	80009	321-5005-00
A5R280	311-1225-00			RES,VAR,NONWW:TRMR,1K OHM,0.5W	80009	311-1225-00
A5R281	321-5049-00			RES,FXD:METAL FILM;1M OHM,1%,0.125W,TC=100 PPM;1206,T&R	80009	321-5049-00
A5R282	321-5049-00			RES,FXD:METAL FILM;1M OHM,1%,0.125W,TC=100 PPM;1206,T&R	80009	321-5049-00
A5R283	321-5047-00			RES,FXD:METAL FILM;100K OHM,1%,0.125W,TC=100 PPM;1206,T&R	80009	321-5047-00
A5R284	321-5047-00			RES,FXD:METAL FILM;100K OHM,1%,0.125W,TC=100 PPM;1206,T&R	80009	321-5047-00
A5R286	321-5025-00			RES,FXD:METAL FILM;3.92K OHM,1%,0.125W,TC=100 PPM;1206,T&R	80009	321-5025-00
A5R290	311-1466-00			RES,VAR,NONWW:TRMR,2K OHM,0.5W	32997	3386F-1-202
A5R293	321-5031-00			RES,FXD:METAL FILM;12.1K OHM,1%,0.125W,TC=100 PPM;1206,T&R	80009	321-5031-00

Component No.	Tektronix Part No.	Serial/Assembly No. Effective	Dscont	Name & Description	Mfr. Code	Mfr. Part No.
A5R300	321-5018-00			RES,FXD:METAL FILM;1.0K OHM,1%,0.125W,TC=100 PPM;1206,T&R	80009	321-5018-00
A5R301	321-5047-00			RES,FXD:METAL FILM;100K OHM,1%,0.125W,TC=100 PPM;1206,T&R	80009	321-5047-00
A5R340	321-5018-00			RES,FXD:METAL FILM;1.0K OHM,1%,0.125W,TC=100 PPM;1206,T&R	80009	321-5018-00
A5R341	321-5030-00			RES,FXD:METAL FILM;10.0K OHM,1%,0.125W,TC=100 PPM;1206,T&R	80009	321-5030-00
A5R342	321-5018-00			RES,FXD:METAL FILM;1.0K OHM,1%,0.125W,TC=100 PPM;1206,T&R	80009	321-5018-00
A5R343	321-5023-00			RES,FXD:METAL FILM;2.74K OHM,1%,0.125W,TC=100 PPM;1206,T&R	80009	321-5023-00
A5R344	321-5026-00			RES,FXD:METAL FILM;4.75K OHM,1%,0.125W,TC=100 PPM;1206,T&R	80009	321-5026-00
A5R350	321-5018-00			RES,FXD:METAL FILM;1.0K OHM,1%,0.125W,TC=100 PPM;1206,T&R	80009	321-5018-00
A5R352	321-5018-00			RES,FXD:METAL FILM;1.0K OHM,1%,0.125W,TC=100 PPM;1206,T&R	80009	321-5018-00
A5R353	321-5018-00			RES,FXD:METAL FILM;1.0K OHM,1%,0.125W,TC=100 PPM;1206,T&R	80009	321-5018-00
A5R360	321-5047-00			RES,FXD:METAL FILM;100K OHM,1%,0.125W,TC=100 PPM;1206,T&R	80009	321-5047-00
A5R361	321-5018-00			RES,FXD:METAL FILM;1.0K OHM,1%,0.125W,TC=100 PPM;1206,T&R	80009	321-5018-00
A5R370	321-5030-00			RES,FXD:METAL FILM;10.0K OHM,1%,0.125W,TC=100 PPM;1206,T&R	80009	321-5030-00
A5R371	321-5030-00			RES,FXD:METAL FILM;10.0K OHM,1%,0.125W,TC=100 PPM;1206,T&R	80009	321-5030-00
A5R372	321-5030-00			RES,FXD:METAL FILM;10.0K OHM,1%,0.125W,TC=100 PPM;1206,T&R	80009	321-5030-00
A5R374	321-5017-00			RES,FXD:METAL FILM;825 OHM,1%,0.125W,TC=100 PPM;1206,T&R	80009	321-5017-00
A5R380	321-5030-00			RES,FXD:METAL FILM;10.0K OHM,1%,0.125W,TC=100 PPM;1206,T&R	80009	321-5030-00
A5R381	321-5030-00			RES,FXD:METAL FILM;10.0K OHM,1%,0.125W,TC=100 PPM;1206,T&R	80009	321-5030-00
A5R382	321-5030-00			RES,FXD:METAL FILM;10.0K OHM,1%,0.125W,TC=100 PPM;1206,T&R	80009	321-5030-00
A5R430	321-5048-00			RES,FXD:METAL FILM;332K OHM,1%,0.125W,TC=100 PPM;1206,T&R	80009	321-5048-00
A5R431	321-5048-00			RES,FXD:METAL FILM;332K OHM,1%,0.125W,TC=100 PPM;1206,T&R	80009	321-5048-00
A5R441	321-5030-00			RES,FXD:METAL FILM;10.0K OHM,1%,0.125W,TC=100 PPM;1206,T&R	80009	321-5030-00
A5R450	321-5018-00			RES,FXD:METAL FILM;1.0K OHM,1%,0.125W,TC=100 PPM;1206,T&R	80009	321-5018-00
A5R451	321-5000-00			RES,FXD:METAL FILM;10 OHM,1%,0.125W,TC=100 PPM;1206,T&R	57668	MCR18EZHFW10E
A5R463	321-5018-00			RES,FXD:METAL FILM;1.0K OHM,1%,0.125W,TC=100 PPM;1206,T&R	80009	321-5018-00
A5R471	321-5030-00			RES,FXD:METAL FILM;10.0K OHM,1%,0.125W,TC=100 PPM;1206,T&R	80009	321-5030-00
A5R472	321-5049-00			RES,FXD:METAL FILM;1M OHM,1%,0.125W,TC=100 PPM;1206,T&R	80009	321-5049-00
A5R473	321-5047-00			RES,FXD:METAL FILM;100K OHM,1%,0.125W,TC=100 PPM;1206,T&R	80009	321-5047-00
A5R474	321-5049-00			RES,FXD:METAL FILM;1M OHM,1%,0.125W,TC=100 PPM;1206,T&R	80009	321-5049-00

Component No.	Tektronix Part No.	Serial/Assembly No. Effective	Dscont	Name & Description	Mfr. Code	Mfr. Part No.
A5R481	321-5017-00			RES,FXD:METAL FILM;825 OHM,1%,0.125W,TC=100 PPM;1206,T&R	80009	321-5017-00
A5R482	321-5047-00			RES,FXD:METAL FILM;100K OHM,1%,0.125W,TC=10 0 PPM;1206,T&R	80009	321-5047-00
A5R483	321-5025-00			RES,FXD:METAL FILM;3.92K OHM,1%,0.125W,TC=1 00 PPM;1206,T&R	80009	321-5025-00
A5R541	321-5018-00			RES,FXD:METAL FILM;1.0K OHM,1%,0.125W,TC=10 0 PPM;1206,T&R	80009	321-5018-00
A5R542	321-5018-00			RES,FXD:METAL FILM;1.0K OHM,1%,0.125W,TC=10 0 PPM;1206,T&R	80009	321-5018-00
A5R543	321-5022-00			RES,FXD:METAL FILM;2.21K OHM,1%,0.125W,TC=1 00 PPM;1206,T&R	80009	321-5022-00
A5R544	321-5018-00			RES,FXD:METAL FILM;1.0K OHM,1%,0.125W,TC=10 0 PPM;1206,T&R	80009	321-5018-00
A5R552	321-5032-00			RES,FXD:METAL FILM;15.0K OHM,1%,0.125W,TC=1 00 PPM;1206,T&R	80009	321-5032-00
A5R561	321-5018-00			RES,FXD:METAL FILM;1.0K OHM,1%,0.125W,TC=10 0 PPM;1206,T&R	80009	321-5018-00
A5R562	321-5018-00			RES,FXD:METAL FILM;1.0K OHM,1%,0.125W,TC=10 0 PPM;1206,T&R	80009	321-5018-00
A5R570	321-5030-00			RES,FXD:METAL FILM;10.0K OHM,1%,0.125W,TC=1 00 PPM;1206,T&R	80009	321-5030-00
A5R571	321-5049-00			RES,FXD:METAL FILM;1M OHM,1%,0.125W,TC=100 PPM;1206,T&R	80009	321-5049-00
A5R572	321-5018-00			RES,FXD:METAL FILM;1.0K OHM,1%,0.125W,TC=10 0 PPM;1206,T&R	80009	321-5018-00
A5R573	321-5018-00			RES,FXD:METAL FILM;1.0K OHM,1%,0.125W,TC=10 0 PPM;1206,T&R	80009	321-5018-00
A5R580	321-5018-00			RES,FXD:METAL FILM;1.0K OHM,1%,0.125W,TC=10 0 PPM;1206,T&R	80009	321-5018-00
A5R581	321-5018-00			RES,FXD:METAL FILM;1.0K OHM,1%,0.125W,TC=10 0 PPM;1206,T&R	80009	321-5018-00
A5R591	321-5009-00			RES,FXD:METAL FILM;182 OHM,1%,0.125W,TC=100 PPM;1206,T&R	80009	321-5009-00
A5R630	321-5018-00			RES,FXD:METAL FILM;1.0K OHM,1%,0.125W,TC=10 0 PPM;1206,T&R	80009	321-5018-00
A5R631	321-5047-00			RES,FXD:METAL FILM;100K OHM,1%,0.125W,TC=10 0 PPM;1206,T&R	80009	321-5047-00
A5R640	311-1225-00			RES,VAR,NONWW:TRMR,1K OHM,0.5W	80009	311-1225-00
A5R650	321-5020-00			RES,FXD:METAL FILM;1.5K OHM,1%,0.125W,TC=10 0 PPM;1206,T&R	80009	321-5020-00
A5R651	321-5033-00			RES,FXD:METAL FILM;18.2K OHM,1%,0.125W,TC=1 00 PPM;1206,T&R	80009	321-5033-00
A5R652	321-5030-00			RES,FXD:METAL FILM;10.0K OHM,1%,0.125W,TC=1 00 PPM;1206,T&R	80009	321-5030-00
A5R653	321-5027-00			RES,FXD:METAL FILM;5.62K OHM,1%,0.125W,TC=1 00 PPM;1206,T&R	80009	321-5027-00
A5R654	321-5024-00			RES,FXD:METAL FILM;3.32K OHM,1%,0.125W,TC=1 00 PPM;1206,T&R	80009	321-5024-00
A5R660	321-5038-00			RES,FXD:METAL FILM;47.5K OHM,1%,0.125W,TC=1 00 PPM;1206,T&R	80009	321-5038-00
A5R661	321-5040-00			RES,FXD:METAL FILM;68.1K OHM,1%,0.125W,TC=1 00 PPM;1206,T&R	80009	321-5040-00
A5R680	321-5026-00			RES,FXD:METAL FILM;4.75K OHM,1%,0.125W,TC=1 00 PPM;1206,T&R	80009	321-5026-00
A5R681	321-5018-00			RES,FXD:METAL FILM;1.0K OHM,1%,0.125W,TC=10 0 PPM;1206,T&R	80009	321-5018-00
A5R682	321-5018-00			RES,FXD:METAL FILM;1.0K OHM,1%,0.125W,TC=10 0 PPM;1206,T&R	80009	321-5018-00

Component No.	Tektronix Part No.	Serial/Assembly No. Effective	Dscont	Name & Description	Mfr. Code	Mfr. Part No.
A5R683	321-5030-00			RES,FXD:METAL FILM;10.0K OHM,1%,0.125W,TC=100 PPM;1206,T&R	80009	321-5030-00
A5R684	321-5030-00			RES,FXD:METAL FILM;10.0K OHM,1%,0.125W,TC=100 PPM;1206,T&R	80009	321-5030-00
A5R692	321-5030-00			RES,FXD:METAL FILM;10.0K OHM,1%,0.125W,TC=100 PPM;1206,T&R	80009	321-5030-00
A5R693	321-5029-00			RES,FXD:METAL FILM;8.25K OHM,1%,0.125W,TC=100 PPM;1206,T&R	80009	321-5029-00
A5R701	301-0560-00			RES,FXD,FILM:56 OHM,5%,0.5W	01121	EB5605
A5R702	301-0560-00			RES,FXD,FILM:56 OHM,5%,0.5W	01121	EB5605
A5R703	321-5030-00			RES,FXD:METAL FILM;10.0K OHM,1%,0.125W,TC=100 PPM;1206,T&R	80009	321-5030-00
A5R704	321-5030-00			RES,FXD:METAL FILM;10.0K OHM,1%,0.125W,TC=100 PPM;1206,T&R	80009	321-5030-00
A5R705	321-5018-00			RES,FXD:METAL FILM;1.0K OHM,1%,0.125W,TC=100 PPM;1206,T&R	80009	321-5018-00
A5R710	321-5026-00			RES,FXD:METAL FILM;4.75K OHM,1%,0.125W,TC=100 PPM;1206,T&R	80009	321-5026-00
A5R733	321-5047-00			RES,FXD:METAL FILM;100K OHM,1%,0.125W,TC=100 PPM;1206,T&R	80009	321-5047-00
A5R740	311-1227-00			RES,VAR,NONWW:TRMR,5K OHM,0.5W	80009	311-1227-00
A5R763	321-5004-00			RES,FXD:METAL FILM;22.1 OHM,1%,0.125W,TC=100 PPM;1206,T&R	80009	321-5004-00
A5R764	321-5044-00			RES,FXD:METAL FILM;56.2 OHM,1%,0.125W,TC=100 PPM;1206,T&R	01121	BCD56R2FT
A5R771	321-5000-00			RES,FXD:METAL FILM;10 OHM,1%,0.125W,TC=100 PPM;1206,T&R	57668	MCR18EZHFW10E
A5R780	321-5009-00			RES,FXD:METAL FILM;182 OHM,1%,0.125W,TC=100 PPM;1206,T&R	80009	321-5009-00
A5R990	321-5010-00			RES,FXD:METAL FILM;221 OHM,1%,0.125W,TC=100 PPM;1206,T&R	80009	321-5010-00
A5R991	321-5010-00			RES,FXD:METAL FILM;221 OHM,1%,0.125W,TC=100 PPM;1206,T&R	80009	321-5010-00
A5R992	321-5010-00			RES,FXD:METAL FILM;221 OHM,1%,0.125W,TC=100 PPM;1206,T&R	80009	321-5010-00
A5U150	156-5097-00			IC,MISC:CMOS,ANALOG MUX;8 CHANNEL;CD4051,SO16.150	80009	156-5097-00
A5U160	156-5298-00			IC,LINEAR:BIPOLAR,VOLTAGE REGULATOR;POSITIVE,5V,100MA,5%;MC78L05ACD,SO8.150,TUBE	80009	156-5298-00
A5U170	156-5097-00			IC,MISC:CMOS,ANALOG MUX;8 CHANNEL;CD4051,SO16.150	80009	156-5097-00
A5U211	156-5021-01			IC,DIGITAL:CMOS,REGISTER;8-STAGE SHIFT/STORAGE, 3-STATE;4094,SO16.150,16MM T&R	80009	156-5021-01
A5U225	156-5265-00			IC,DIGITAL:	80009	156-5265-00
A5U244	156-5095-01			IC,LINEAR:BIPOLAR,OP-AMP;LOW NOISE,HIGH OUTPUT DRIVE;NE5534D,SO8.150,12MM T&R	80009	156-5095-01
A5U260	156-5274-01			IC,MISC:CMOS,ANALOG SWITCH;QUAD;DG211,SO16.150,16MM T&R	80009	156-5274-01
A5U270	156-5352-00			IC,LINEAR:BIFET,OP-AMP;LOW OFFSET;LT1056C,SO8.150	80009	156-5352-00
A5U312	156-5021-01			IC,DIGITAL:CMOS,REGISTER;8-STAGE SHIFT/STORAGE, 3-STATE;4094,SO16.150,16MM T&R	80009	156-5021-01
A5U343	156-5095-01			IC,LINEAR:BIPOLAR,OP-AMP;LOW NOISE,HIGH OUTPUT DRIVE;NE5534D,SO8.150,12MM T&R	80009	156-5095-01
A5U374	156-5018-00			IC,LINEAR:BIPOLAR,OP-AMP;DUAL,SINGLE SUPPLY;LM358D,SO8.150,TUBE	80009	156-5018-00
A5U390	156-5299-00			IC,LINEAR:BIPOLAR,VOLTAGE REGULATOR;NEGATIVE,-5V,100MA,5%;MC79L05ACD,SO8.150,TUBE	80009	156-5299-00

Component No.	Tektronix Part No.	Serial/Assembly No. Effective	Dscont	Name & Description	Mfr. Code	Mfr. Part No.
A5U420	156-5694-00			MICROCKT,LINEAR:BIPOLAR,VIDEO SYNC SEPARATO R	80009	156-5694-00
A5U443	156-5274-01			IC,MISC:CMOS,ANALOG SWITCH;QUAD;DG211,SO16. 150,16MM T&R	80009	156-5274-01
A5U452	156-5097-00			IC,MISC:CMOS,ANALOG MUX;8 CHANNEL;CD4051,SO 16.150	80009	156-5097-00
A5U460	160-5714-00			MICROCKT,DGTL:STTL,PLD,FPLA,PRGM	80009	160-5714-00
A5U470	156-5119-00			IC,LINEAR:BIPOLAR,COMPARATOR;DUAL,OPEN COLL ECTOR,80NS;LM319D,SO14.150,TUBE	80009	156-5119-00
A5U510	156-5110-00			IC,DIGITAL:LSTTL,COUNTER;SYNCH 4-BIT UP/DOW N BINARY;74LS169,SO16.150,TUBE	80009	156-5110-00
A5U530	156-5021-01			IC,DIGITAL:CMOS,REGISTER;8-STAGE SHIFT/STOR AGE, 3-STATE;4094,SO16.150,16MM T&R	80009	156-5021-01
A5U540	156-5119-00			IC,LINEAR:BIPOLAR,COMPARATOR;DUAL,OPEN COLL ECTOR,80NS;LM319D,SO14.150,TUBE	80009	156-5119-00
A5U560	156-5018-00			IC,LINEAR:BIPOLAR,OP-AMP;DUAL,SINGLE SUPPLY ;LM358D,SO8.150,TUBE	80009	156-5018-00
A5U590	156-5298-00			IC,LINEAR:BIPOLAR,VOLTAGE REGULATOR;POSITIV E,5V,100MA,5%;MC78L05ACD,SO8.150,TUBE	80009	156-5298-00
A5U610	156-5021-01			IC,DIGITAL:CMOS,REGISTER;8-STAGE SHIFT/STOR AGE, 3-STATE;4094,SO16.150,16MM T&R	80009	156-5021-01
A5U620	156-5110-00			IC,DIGITAL:LSTTL,COUNTER;SYNCH 4-BIT UP/DOW N BINARY;74LS169,SO16.150,TUBE	80009	156-5110-00
A5U630	156-5110-00			IC,DIGITAL:LSTTL,COUNTER;SYNCH 4-BIT UP/DOW N BINARY;74LS169,SO16.150,TUBE	80009	156-5110-00
A5U670	160-5715-00			MICROCKT,DGTL:STTL,PLD,FPLA,PRGM	80009	160-5715-00
A5U690	156-5095-01			IC,LINEAR:BIPOLAR,OP-AMP;LOW NOISE,HIGH OUT PUT DRIVE;NE5534D,SO8.150,12MM T&R	80009	156-5095-01
A5U730	156-5081-01			IC,DIGITAL:HCTMOS,GATE;HEX INVERTER;74HCT04 ,SO14.150,16MM T&R	80009	156-5081-01
A5U760	156-5280-00			IC,LINEAR:BIPOLAR,AMPLIFIER;RF AMP,20DB GAI N,600MHZ;NE5205AD,SO8.150	80009	156-5280-00
A5U770	156-3620-00			IC,LINEAR:BIPOLAR,DETECTOR;FM,WIDEBAND;SL14 54DP,DIP08.3	80009	156-3620-00
A5W261	321-5051-00			RES,FXD:METAL FILM;0 OHM,1%,0.125W,TC=100 P PM;1206,T&R	80009	321-5051-00
A6	671-1923-01			CIRCUIT BD ASSY:FRONT PANEL	80009	671-1923-01
A6C130	283-5004-00			CAP,FXD,CER DI:0.1UF,10%,25V	80009	283-5004-00
A6C131	283-5004-00			CAP,FXD,CER DI:0.1UF,10%,25V	80009	283-5004-00
A6C140	283-5004-00			CAP,FXD,CER DI:0.1UF,10%,25V	80009	283-5004-00
A6C141	283-5004-00			CAP,FXD,CER DI:0.1UF,10%,25V	80009	283-5004-00
A6C180	283-5014-00			CAP,FXD,CER DI:330PF,5%,50V	80009	283-5014-00
A6C181	283-5014-00			CAP,FXD,CER DI:330PF,5%,50V	80009	283-5014-00
A6C190	283-5004-00			CAP,FXD,CER DI:0.1UF,10%,25V	80009	283-5004-00
A6C220	283-5004-00			CAP,FXD,CER DI:0.1UF,10%,25V	80009	283-5004-00
A6C240	283-5004-00			CAP,FXD,CER DI:0.1UF,10%,25V	80009	283-5004-00
A6C250	283-5004-00			CAP,FXD,CER DI:0.1UF,10%,25V	80009	283-5004-00
A6C280	283-5003-00			CAP,FXD,CER DI:0.01UF,10%,50V	80009	283-5003-00
A6C310	283-5004-00			CAP,FXD,CER DI:0.1UF,10%,25V	80009	283-5004-00
A6C330	283-0330-00			CAP,FXD,CER DI:100PF,5%,50V	80009	283-0330-00
A6C340	283-5004-00			CAP,FXD,CER DI:0.1UF,10%,25V	80009	283-5004-00
A6C341	283-5004-00			CAP,FXD,CER DI:0.1UF,10%,25V	80009	283-5004-00
A6C350	283-5004-00			CAP,FXD,CER DI:0.1UF,10%,25V	80009	283-5004-00
A6C351	283-5004-00			CAP,FXD,CER DI:0.1UF,10%,25V	80009	283-5004-00
A6C352	283-5004-00			CAP,FXD,CER DI:0.1UF,10%,25V	80009	283-5004-00
A6C360	283-5004-00			CAP,FXD,CER DI:0.1UF,10%,25V	80009	283-5004-00
A6C380	283-5003-00			CAP,FXD,CER DI:0.01UF,10%,50V	80009	283-5003-00
A6C390	283-5004-00			CAP,FXD,CER DI:0.1UF,10%,25V	80009	283-5004-00
A6C440	283-0330-00			CAP,FXD,CER DI:100PF,5%,50V	80009	283-0330-00

Component No.	Tektronix Part No.	Serial/Assembly No. Effective	Dscont	Name & Description	Mfr. Code	Mfr. Part No.
A6C460	283-5004-00			CAP,FXD,CER DI:0.1UF,10%,25V	80009	283-5004-00
A6C520	283-5004-00			CAP,FXD,CER DI:0.1UF,10%,25V	80009	283-5004-00
A6C540	283-5004-00			CAP,FXD,CER DI:0.1UF,10%,25V	80009	283-5004-00
A6C560	283-5004-00			CAP,FXD,CER DI:0.1UF,10%,25V	80009	283-5004-00
A6CR100	152-5000-00			SEMICOND DVC,DI:SW,SI,70V,COM CATHODE	80009	152-5000-00
A6CR300	152-5000-00			SEMICOND DVC,DI:SW,SI,70V,COM CATHODE	80009	152-5000-00
A6CR400	152-5000-00			SEMICOND DVC,DI:SW,SI,70V,COM CATHODE	80009	152-5000-00
A6DS800	150-5009-00			DIODE,OPTO:,LED;HI-EFFIC RED,626NM,3.4MCD A T IF=10MA;HLMP-6305-T21,YOKE LEAD BEND,12MM T&R	80009	150-5009-00
A6DS820	150-5009-00			DIODE,OPTO:,LED;HI-EFFIC RED,626NM,3.4MCD A T IF=10MA;HLMP-6305-T21,YOKE LEAD BEND,12MM T&R	80009	150-5009-00
A6DS821	150-5009-00			DIODE,OPTO:,LED;HI-EFFIC RED,626NM,3.4MCD A T IF=10MA;HLMP-6305-T21,YOKE LEAD BEND,12MM T&R	80009	150-5009-00
A6DS830	150-5009-00			DIODE,OPTO:,LED;HI-EFFIC RED,626NM,3.4MCD A T IF=10MA;HLMP-6305-T21,YOKE LEAD BEND,12MM T&R	80009	150-5009-00
A6DS860	150-5004-00			DIODE,OPTO:,LED;HI EFFIC RED,635NM,1.0 MCD @ IF=10MA,YOKE LEAD BEND;HLMP-6300-021,12MM TR	80009	150-5004-00
A6DS910	150-5009-00			DIODE,OPTO:,LED;HI-EFFIC RED,626NM,3.4MCD A T IF=10MA;HLMP-6305-T21,YOKE LEAD BEND,12MM T&R	80009	150-5009-00
A6DS920	150-5008-00			DIODE,OPTO:,LED;GRN,569NM,4.2MCD AT 10MA,28 DEG VIEW ANGL,YOKE LEAD BEND;HLMP-6505-T21	50434	HLMP-6505 OPT21
A6DS921	150-5009-00			DIODE,OPTO:,LED;HI-EFFIC RED,626NM,3.4MCD A T IF=10MA;HLMP-6305-T21,YOKE LEAD BEND,12MM T&R	80009	150-5009-00
A6DS922	150-5008-00			DIODE,OPTO:,LED;GRN,569NM,4.2MCD AT 10MA,28 DEG VIEW ANGL,YOKE LEAD BEND;HLMP-6505-T21	50434	HLMP-6505 OPT21
A6DS930	150-5009-00			DIODE,OPTO:,LED;HI-EFFIC RED,626NM,3.4MCD A T IF=10MA;HLMP-6305-T21,YOKE LEAD BEND,12MM T&R	80009	150-5009-00
A6DS931	150-5008-00			DIODE,OPTO:,LED;GRN,569NM,4.2MCD AT 10MA,28 DEG VIEW ANGL,YOKE LEAD BEND;HLMP-6505-T21	50434	HLMP-6505 OPT21
A6DS940	150-5009-00			DIODE,OPTO:,LED;HI-EFFIC RED,626NM,3.4MCD A T IF=10MA;HLMP-6305-T21,YOKE LEAD BEND,12MM T&R	80009	150-5009-00
A6DS941	150-5008-00			DIODE,OPTO:,LED;GRN,569NM,4.2MCD AT 10MA,28 DEG VIEW ANGL,YOKE LEAD BEND;HLMP-6505-T21	50434	HLMP-6505 OPT21
A6DS950	150-5009-00			DIODE,OPTO:,LED;HI-EFFIC RED,626NM,3.4MCD A T IF=10MA;HLMP-6305-T21,YOKE LEAD BEND,12MM T&R	80009	150-5009-00
A6DS951	150-5009-00			DIODE,OPTO:,LED;HI-EFFIC RED,626NM,3.4MCD A T IF=10MA;HLMP-6305-T21,YOKE LEAD BEND,12MM T&R	80009	150-5009-00
A6DS960	150-5009-00			DIODE,OPTO:,LED;HI-EFFIC RED,626NM,3.4MCD A T IF=10MA;HLMP-6305-T21,YOKE LEAD BEND,12MM T&R	80009	150-5009-00
A6DS961	150-5009-00			DIODE,OPTO:,LED;HI-EFFIC RED,626NM,3.4MCD A T IF=10MA;HLMP-6305-T21,YOKE LEAD BEND,12MM T&R	80009	150-5009-00
A6DS980	150-5008-00			DIODE,OPTO:,LED;GRN,569NM,4.2MCD AT 10MA,28 DEG VIEW ANGL,YOKE LEAD BEND;HLMP-6505-T21	50434	HLMP-6505 OPT21
A6J360	131-1857-00			CONN,HDR:PCB,;MALE,STR,1 X 36,0.1 CTR,0.230 MLG X 0.100 TAIL,GOLD;,,	58050	082-3644-SS10
A6J380	131-1857-00			CONN,HDR:PCB,;MALE,STR,1 X 36,0.1 CTR,0.230 MLG X 0.100 TAIL,GOLD;,,	58050	082-3644-SS10

Component No.	Tektronix Part No.	Serial/Assembly No. Effective	Dscont	Name & Description	Mfr. Code	Mfr. Part No.
A6J480	131-1857-00			CONN,HDR:PCB,;MALE,STR,1 X 36,0.1 CTR,0.230 MLG X 0.100 TAIL,GOLD;,,	58050	082-3644-SS10
A6J550	131-2514-00			CONN,HDR::	00779	86479-1
A6Q100	151-5000-00			TRANSISTOR,SIG:BIPOLAR,PNP;40V,200MA,250MHZ ,AMPLIFIER;MMBT3906L,TO-236/SOT-23,8MM T&R	04713	MMBT3906LT1
A6Q200	151-5000-00			TRANSISTOR,SIG:BIPOLAR,PNP;40V,200MA,250MHZ ,AMPLIFIER;MMBT3906L,TO-236/SOT-23,8MM T&R	04713	MMBT3906LT1
A6Q201	151-5000-00			TRANSISTOR,SIG:BIPOLAR,PNP;40V,200MA,250MHZ ,AMPLIFIER;MMBT3906L,TO-236/SOT-23,8MM T&R	04713	MMBT3906LT1
A6Q280	151-5001-00			TRANSISTOR,SIG:BIPOLAR,NPN;40V,200MA,300MHZ ,AMPLIFIER;MMBT3904L,TO-236/SOT-23,8MM T&R	80009	151-5001-00
A6Q300	151-5000-00			TRANSISTOR,SIG:BIPOLAR,PNP;40V,200MA,250MHZ ,AMPLIFIER;MMBT3906L,TO-236/SOT-23,8MM T&R	04713	MMBT3906LT1
A6Q380	151-5001-00			TRANSISTOR,SIG:BIPOLAR,NPN;40V,200MA,300MHZ ,AMPLIFIER;MMBT3904L,TO-236/SOT-23,8MM T&R	80009	151-5001-00
A6Q400	151-5000-00			TRANSISTOR,SIG:BIPOLAR,PNP;40V,200MA,250MHZ ,AMPLIFIER;MMBT3906L,TO-236/SOT-23,8MM T&R	04713	MMBT3906LT1
A6Q510	151-5000-00			TRANSISTOR,SIG:BIPOLAR,PNP;40V,200MA,250MHZ ,AMPLIFIER;MMBT3906L,TO-236/SOT-23,8MM T&R	04713	MMBT3906LT1
A6R100	321-5034-00			RES,FXD:METAL FILM;22.1K OHM,1%,0.125W,TC=1 00 PPM;1206,T&R	80009	321-5034-00
A6R110	321-5034-00			RES,FXD:METAL FILM;22.1K OHM,1%,0.125W,TC=1 00 PPM;1206,T&R	80009	321-5034-00
A6R130	321-5030-00			RES,FXD:METAL FILM;10.0K OHM,1%,0.125W,TC=1 00 PPM;1206,T&R	80009	321-5030-00
A6R140	321-5030-00			RES,FXD:METAL FILM;10.0K OHM,1%,0.125W,TC=1 00 PPM;1206,T&R	80009	321-5030-00
A6R150	321-5047-00			RES,FXD:METAL FILM;100K OHM,1%,0.125W,TC=10 0 PPM;1206,T&R	80009	321-5047-00
A6R180	321-5017-00			RES,FXD:METAL FILM;825 OHM,1%,0.125W,TC=100 PPM;1206,T&R	80009	321-5017-00
A6R200	321-5047-00			RES,FXD:METAL FILM;100K OHM,1%,0.125W,TC=10 0 PPM;1206,T&R	80009	321-5047-00
A6R201	321-5034-00			RES,FXD:METAL FILM;22.1K OHM,1%,0.125W,TC=1 00 PPM;1206,T&R	80009	321-5034-00
A6R210	321-5034-00			RES,FXD:METAL FILM;22.1K OHM,1%,0.125W,TC=1 00 PPM;1206,T&R	80009	321-5034-00
A6R211	321-5047-00			RES,FXD:METAL FILM;100K OHM,1%,0.125W,TC=10 0 PPM;1206,T&R	80009	321-5047-00
A6R212	321-5047-00			RES,FXD:METAL FILM;100K OHM,1%,0.125W,TC=10 0 PPM;1206,T&R	80009	321-5047-00
A6R220	321-5047-00			RES,FXD:METAL FILM;100K OHM,1%,0.125W,TC=10 0 PPM;1206,T&R	80009	321-5047-00
A6R230	321-5047-00			RES,FXD:METAL FILM;100K OHM,1%,0.125W,TC=10 0 PPM;1206,T&R	80009	321-5047-00
A6R240	321-5047-00			RES,FXD:METAL FILM;100K OHM,1%,0.125W,TC=10 0 PPM;1206,T&R	80009	321-5047-00
A6R250	321-5047-00			RES,FXD:METAL FILM;100K OHM,1%,0.125W,TC=10 0 PPM;1206,T&R	80009	321-5047-00
A6R280	321-5047-00			RES,FXD:METAL FILM;100K OHM,1%,0.125W,TC=10 0 PPM;1206,T&R	80009	321-5047-00
A6R281	321-5030-00			RES,FXD:METAL FILM;10.0K OHM,1%,0.125W,TC=1 00 PPM;1206,T&R	80009	321-5030-00
A6R300	321-5034-00			RES,FXD:METAL FILM;22.1K OHM,1%,0.125W,TC=1 00 PPM;1206,T&R	80009	321-5034-00
A6R301	321-5034-00			RES,FXD:METAL FILM;22.1K OHM,1%,0.125W,TC=1 00 PPM;1206,T&R	80009	321-5034-00
A6R302	321-5034-00			RES,FXD:METAL FILM;22.1K OHM,1%,0.125W,TC=1 00 PPM;1206,T&R	80009	321-5034-00

Component No.	Tektronix Part No.	Serial/Assembly No. Effective	Dscont	Name & Description	Mfr. Code	Mfr. Part No.
A6R310	321-5034-00			RES,FXD:METAL FILM;22.1K OHM,1%,0.125W,TC=100 PPM;1206,T&R	80009	321-5034-00
A6R340	321-5049-00			RES,FXD:METAL FILM;1M OHM,1%,0.125W,TC=100 PPM;1206,T&R	80009	321-5049-00
A6R341	321-5049-00			RES,FXD:METAL FILM;1M OHM,1%,0.125W,TC=100 PPM;1206,T&R	80009	321-5049-00
A6R350	321-5049-00			RES,FXD:METAL FILM;1M OHM,1%,0.125W,TC=100 PPM;1206,T&R	80009	321-5049-00
A6R351	321-5049-00			RES,FXD:METAL FILM;1M OHM,1%,0.125W,TC=100 PPM;1206,T&R	80009	321-5049-00
A6R352	321-5047-00			RES,FXD:METAL FILM;100K OHM,1%,0.125W,TC=100 PPM;1206,T&R	80009	321-5047-00
A6R380	321-5047-00			RES,FXD:METAL FILM;100K OHM,1%,0.125W,TC=100 PPM;1206,T&R	80009	321-5047-00
A6R381	321-5030-00			RES,FXD:METAL FILM;10.0K OHM,1%,0.125W,TC=100 PPM;1206,T&R	80009	321-5030-00
A6R390	321-5011-00			RES,FXD:METAL FILM;274 OHM,1%,0.125W,TC=100 PPM;1206,T&R	80009	321-5011-00
A6R400	321-5034-00			RES,FXD:METAL FILM;22.1K OHM,1%,0.125W,TC=100 PPM;1206,T&R	80009	321-5034-00
A6R401	321-5034-00			RES,FXD:METAL FILM;22.1K OHM,1%,0.125W,TC=100 PPM;1206,T&R	80009	321-5034-00
A6R441	321-5024-00			RES,FXD:METAL FILM;3.32K OHM,1%,0.125W,TC=100 PPM;1206,T&R	80009	321-5024-00
A6R442	321-5026-00			RES,FXD:METAL FILM;4.75K OHM,1%,0.125W,TC=100 PPM;1206,T&R	80009	321-5026-00
A6R443	321-5026-00			RES,FXD:METAL FILM;4.75K OHM,1%,0.125W,TC=100 PPM;1206,T&R	80009	321-5026-00
A6R450	321-5030-00			RES,FXD:METAL FILM;10.0K OHM,1%,0.125W,TC=100 PPM;1206,T&R	80009	321-5030-00
A6R451	321-5026-00			RES,FXD:METAL FILM;4.75K OHM,1%,0.125W,TC=100 PPM;1206,T&R	80009	321-5026-00
A6R460	321-5014-00			RES,FXD:METAL FILM;475 OHM,1%,0.125W,TC=100 PPM;1206,T&R	80009	321-5014-00
A6R461	321-5014-00			RES,FXD:METAL FILM;475 OHM,1%,0.125W,TC=100 PPM;1206,T&R	80009	321-5014-00
A6R480	321-5018-00			RES,FXD:METAL FILM;1.0K OHM,1%,0.125W,TC=100 PPM;1206,T&R	80009	321-5018-00
A6R481	321-5011-00			RES,FXD:METAL FILM;274 OHM,1%,0.125W,TC=100 PPM;1206,T&R	80009	321-5011-00
A6R482	321-5011-00			RES,FXD:METAL FILM;274 OHM,1%,0.125W,TC=100 PPM;1206,T&R	80009	321-5011-00
A6R483	321-5047-00			RES,FXD:METAL FILM;100K OHM,1%,0.125W,TC=100 PPM;1206,T&R	80009	321-5047-00
A6R490	321-5011-00			RES,FXD:METAL FILM;274 OHM,1%,0.125W,TC=100 PPM;1206,T&R	80009	321-5011-00
A6R491	321-5011-00			RES,FXD:METAL FILM;274 OHM,1%,0.125W,TC=100 PPM;1206,T&R	80009	321-5011-00
A6R492	321-5011-00			RES,FXD:METAL FILM;274 OHM,1%,0.125W,TC=100 PPM;1206,T&R	80009	321-5011-00
A6R493	321-5047-00			RES,FXD:METAL FILM;100K OHM,1%,0.125W,TC=100 PPM;1206,T&R	80009	321-5047-00
A6R500	321-5047-00			RES,FXD:METAL FILM;100K OHM,1%,0.125W,TC=100 PPM;1206,T&R	80009	321-5047-00
A6R510	321-5034-00			RES,FXD:METAL FILM;22.1K OHM,1%,0.125W,TC=100 PPM;1206,T&R	80009	321-5034-00
A6R511	321-5034-00			RES,FXD:METAL FILM;22.1K OHM,1%,0.125W,TC=100 PPM;1206,T&R	80009	321-5034-00

Component No.	Tektronix Part No.	Serial/Assembly No. Effective	Dscont	Name & Description	Mfr. Code	Mfr. Part No.
A6R620	321-5011-00			RES,FXD:METAL FILM;274 OHM,1%,0.125W,TC=100 PPM;1206,T&R	80009	321-5011-00
A6R621	321-5011-00			RES,FXD:METAL FILM;274 OHM,1%,0.125W,TC=100 PPM;1206,T&R	80009	321-5011-00
A6R622	321-5011-00			RES,FXD:METAL FILM;274 OHM,1%,0.125W,TC=100 PPM;1206,T&R	80009	321-5011-00
A6R623	321-5011-00			RES,FXD:METAL FILM;274 OHM,1%,0.125W,TC=100 PPM;1206,T&R	80009	321-5011-00
A6R630	321-5011-00			RES,FXD:METAL FILM;274 OHM,1%,0.125W,TC=100 PPM;1206,T&R	80009	321-5011-00
A6R631	321-5011-00			RES,FXD:METAL FILM;274 OHM,1%,0.125W,TC=100 PPM;1206,T&R	80009	321-5011-00
A6R632	321-5011-00			RES,FXD:METAL FILM;274 OHM,1%,0.125W,TC=100 PPM;1206,T&R	80009	321-5011-00
A6R633	321-5011-00			RES,FXD:METAL FILM;274 OHM,1%,0.125W,TC=100 PPM;1206,T&R	80009	321-5011-00
A6R634	321-5011-00			RES,FXD:METAL FILM;274 OHM,1%,0.125W,TC=100 PPM;1206,T&R	80009	321-5011-00
A6R635	321-5011-00			RES,FXD:METAL FILM;274 OHM,1%,0.125W,TC=100 PPM;1206,T&R	80009	321-5011-00
A6R636	321-5011-00			RES,FXD:METAL FILM;274 OHM,1%,0.125W,TC=100 PPM;1206,T&R	80009	321-5011-00
A6R637	321-5011-00			RES,FXD:METAL FILM;274 OHM,1%,0.125W,TC=100 PPM;1206,T&R	80009	321-5011-00
A6R640	321-5011-00			RES,FXD:METAL FILM;274 OHM,1%,0.125W,TC=100 PPM;1206,T&R	80009	321-5011-00
A6R641	321-5011-00			RES,FXD:METAL FILM;274 OHM,1%,0.125W,TC=100 PPM;1206,T&R	80009	321-5011-00
A6R642	321-5011-00			RES,FXD:METAL FILM;274 OHM,1%,0.125W,TC=100 PPM;1206,T&R	80009	321-5011-00
A6R643	321-5011-00			RES,FXD:METAL FILM;274 OHM,1%,0.125W,TC=100 PPM;1206,T&R	80009	321-5011-00
A6R680	321-5011-00			RES,FXD:METAL FILM;274 OHM,1%,0.125W,TC=100 PPM;1206,T&R	80009	321-5011-00
A6SW260	311-2320-00			ENCODER,DIGITAL:INCREMENTAL,50PPR,50 DETENT ,QUAD OUTPUT,LOC LUG AT 9 O'CLOCK	TK1869	LA22661
A6U130	156-5080-00			IC,DIGITAL:CMOS,REGISTER;8-STAGE STATIC SHI FT REGISTER;4021B,SO16.150,TUBE	80009	156-5080-00
A6U135	156-5265-00			IC,DIGITAL:	80009	156-5265-00
A6U140	156-5080-00			IC,DIGITAL:CMOS,REGISTER;8-STAGE STATIC SHI FT REGISTER;4021B,SO16.150,TUBE	80009	156-5080-00
A6U190	156-5037-00			IC,DIGITAL:LSTTL,SCHMITT TRIG;HEX INV;74LS1 4,SO14.150,TUBE	80009	156-5037-00
A6U250	156-5098-00			IC,DIGITAL:HCTCMOS,GATE;QUAD 2-INPUT NAND;7 4HCT00,SO14.150,TUBE	80009	156-5098-00
A6U310	156-5080-00			IC,DIGITAL:CMOS,REGISTER;8-STAGE STATIC SHI FT REGISTER;4021B,SO16.150,TUBE	80009	156-5080-00
A6U320	156-5145-00			IC,DIGITAL:HCTCMOS,FLIP FLOP;DUAL D-TYPE;74 HCT74,SO14.150,TUBE	80009	156-5145-00
A6U340	156-5145-00			IC,DIGITAL:HCTCMOS,FLIP FLOP;DUAL D-TYPE;74 HCT74,SO14.150,TUBE	80009	156-5145-00
A6U350	156-5265-00			IC,DIGITAL:	80009	156-5265-00
A6U450	156-5079-00			IC,DIGITAL:LSTTL,BUFFER;QUAD BUS, 3-STATE;7 4LS125,SO14.150,TUBE	80009	156-5079-00
A6U490	156-5254-00			IC,DIGITAL:HCTCMOS,REGISTER;8-STAGE SHIFT A ND STORE BUS REGISTER;74HCT4094,SO16.150,TU BE	80009	156-5254-00

Component No.	Tektronix Part No.	Serial/Assembly No. Effective	Dscont	Name & Description	Mfr. Code	Mfr. Part No.
A6U620	156-5254-00			IC,DIGITAL:HCTCMOS,REGISTER;8-STAGE SHIFT AND STORE BUS REGISTER;74HCT4094,SO16.150,TUBE	80009	156-5254-00
A6U640	156-5254-00			IC,DIGITAL:HCTCMOS,REGISTER;8-STAGE SHIFT AND STORE BUS REGISTER;74HCT4094,SO16.150,TUBE	80009	156-5254-00
A7	671-1674-00	B010100	B010236	CIRCUIT BD ASSY:LOG AMP	80009	671-1674-00
A7	671-1674-01	B010237	B010325	CIRCUIT BD ASSY:LOG AMP	80009	671-1674-01
A7	671-1674-02	B010326		CIRCUIT BD ASSY:LOG AMP	80009	671-1674-02
A7C100	283-5004-00			CAP,FXD,CER DI:0.1UF,10%,25V	80009	283-5004-00
A7C110	283-5004-00			CAP,FXD,CER DI:0.1UF,10%,25V	80009	283-5004-00
A7C111	283-5016-00			CAP,FXD,CER DI:1UF,10%,50V	80009	283-5016-00
A7C120	283-5004-00			CAP,FXD,CER DI:0.1UF,10%,25V	80009	283-5004-00
A7C130	283-5002-00			CAP,FXD,CER DI:1000PF,10%,50V	80009	283-5002-00
A7C152	283-5004-00			CAP,FXD,CER DI:0.1UF,10%,25V	80009	283-5004-00
A7C170	283-5004-00			CAP,FXD,CER DI:0.1UF,10%,25V	80009	283-5004-00
A7C171	283-5004-00			CAP,FXD,CER DI:0.1UF,10%,25V	80009	283-5004-00
A7C190	283-5004-00			CAP,FXD,CER DI:0.1UF,10%,25V	80009	283-5004-00
A7C191	283-5004-00			CAP,FXD,CER DI:0.1UF,10%,25V	80009	283-5004-00
A7C200	283-5016-00			CAP,FXD,CER DI:1UF,10%,50V	80009	283-5016-00
A7C210	283-5016-00			CAP,FXD,CER DI:1UF,10%,50V	80009	283-5016-00
A7C211	283-5004-00			CAP,FXD,CER DI:0.1UF,10%,25V	80009	283-5004-00
A7C212	283-5002-00			CAP,FXD,CER DI:1000PF,10%,50V	80009	283-5002-00
A7C213	283-5004-00			CAP,FXD,CER DI:0.1UF,10%,25V	80009	283-5004-00
A7C230	283-5004-00			CAP,FXD,CER DI:0.1UF,10%,25V	80009	283-5004-00
A7C231	283-5004-00			CAP,FXD,CER DI:0.1UF,10%,25V	80009	283-5004-00
A7C232	283-5004-00			CAP,FXD,CER DI:0.1UF,10%,25V	80009	283-5004-00
A7C233	283-5004-00			CAP,FXD,CER DI:0.1UF,10%,25V	80009	283-5004-00
A7C240	283-5004-00			CAP,FXD,CER DI:0.1UF,10%,25V	80009	283-5004-00
A7C241	283-5002-00			CAP,FXD,CER DI:1000PF,10%,50V	80009	283-5002-00
A7C242	283-5002-00			CAP,FXD,CER DI:1000PF,10%,50V	80009	283-5002-00
A7C243	283-5014-00			CAP,FXD,CER DI:330PF,5%,50V	80009	283-5014-00
A7C250	283-5025-00			CAP,FXD,CER DI:220PF,5%,50V	80009	283-5025-00
A7C251	283-5004-00			CAP,FXD,CER DI:0.1UF,10%,25V	80009	283-5004-00
A7C252	283-5004-00			CAP,FXD,CER DI:0.1UF,10%,25V	80009	283-5004-00
A7C253	283-5004-00			CAP,FXD,CER DI:0.1UF,10%,25V	80009	283-5004-00
A7C254	283-5004-00			CAP,FXD,CER DI:0.1UF,10%,25V	80009	283-5004-00
A7C260	283-5004-00			CAP,FXD,CER DI:0.1UF,10%,25V	80009	283-5004-00
A7C270	283-5004-00			CAP,FXD,CER DI:0.1UF,10%,25V	80009	283-5004-00
A7C280	281-0298-00			CAP,VAR,CER DI:6-50PF	51406	TZ03Z500YR
A7C281	283-5004-00			CAP,FXD,CER DI:0.1UF,10%,25V	80009	283-5004-00
A7C282	283-5004-00			CAP,FXD,CER DI:0.1UF,10%,25V	80009	283-5004-00
A7C283	283-5004-00			CAP,FXD,CER DI:0.1UF,10%,25V	80009	283-5004-00
A7C290	283-5004-00			CAP,FXD,CER DI:0.1UF,10%,25V	80009	283-5004-00
A7C291	283-5004-00			CAP,FXD,CER DI:0.1UF,10%,25V	80009	283-5004-00
A7C300	283-5004-00			CAP,FXD,CER DI:0.1UF,10%,25V	80009	283-5004-00
A7C301	283-5004-00			CAP,FXD,CER DI:0.1UF,10%,25V	80009	283-5004-00
A7C320	283-5004-00			CAP,FXD,CER DI:0.1UF,10%,25V	80009	283-5004-00
A7C321	283-5004-00			CAP,FXD,CER DI:0.1UF,10%,25V	80009	283-5004-00
A7C322	283-5004-00			CAP,FXD,CER DI:0.1UF,10%,25V	80009	283-5004-00
A7C330	283-5004-00			CAP,FXD,CER DI:0.1UF,10%,25V	80009	283-5004-00
A7C340	283-5004-00			CAP,FXD,CER DI:0.1UF,10%,25V	80009	283-5004-00
A7C350	283-5004-00			CAP,FXD,CER DI:0.1UF,10%,25V	80009	283-5004-00
A7C353	283-5000-00			CAP,FXD,CER DI:10PF,5%,50V	80009	283-5000-00
A7C354	283-5011-00			CAP,FXD,CER DI:33PF,5%,50V	95275	VJ1206A330JXA
A7C355	283-5011-00			CAP,FXD,CER DI:33PF,5%,50V	95275	VJ1206A330JXA
A7C356	283-5001-00			CAP,FXD,CER DI:100PF,5%,50V	80009	283-5001-00
A7C357	281-0298-00			CAP,VAR,CER DI:6-50PF	51406	TZ03Z500YR
A7C360	290-0943-00			CAP,FXD,ELCTLT:47UF,+50-20%,25V	55680	UVX1V470MPA

Component No.	Tektronix Part No.	Serial/Assembly No. Effective	Dscont	Name & Description	Mfr. Code	Mfr. Part No.
A7C361	283-5004-00			CAP,FXD,CER DI:0.1UF,10%,25V	80009	283-5004-00
A7C362	283-5004-00			CAP,FXD,CER DI:0.1UF,10%,25V	80009	283-5004-00
A7C363	290-0944-00			CAP,FXD,ELCTLT:220UF,+50-20%,10V	55680	UVX1C221MPA
A7C370	283-5004-00			CAP,FXD,CER DI:0.1UF,10%,25V	80009	283-5004-00
A7C380	283-5025-00			CAP,FXD,CER DI:220PF,5%,50V	80009	283-5025-00
A7C381	283-5001-00			CAP,FXD,CER DI:100PF,5%,50V	80009	283-5001-00
A7C382	283-5027-00			CAP,FXD,CER DI:470PF,5%,50V	54583	
A7C383	283-5022-00			CAP,FXD,CER DI:47PF,5%,50V	54583	
A7C384	283-5049-00			CAP,FXD,CER DI:180PF,5%,50V	95275	VJ1206A181JXA
A7C385	283-5011-00			CAP,FXD,CER DI:33PF,5%,50V	95275	VJ1206A330JXA
A7C386	283-5004-00			CAP,FXD,CER DI:0.1UF,10%,25V	80009	283-5004-00
A7C387	283-5025-00			CAP,FXD,CER DI:220PF,5%,50V	80009	283-5025-00
A7C390	283-5004-00			CAP,FXD,CER DI:0.1UF,10%,25V	80009	283-5004-00
A7C391	283-5004-00			CAP,FXD,CER DI:0.1UF,10%,25V	80009	283-5004-00
A7C392	281-0298-00			CAP,VAR,CER DI:6-50PF	51406	TZ03Z500YR
A7C400	283-5004-00			CAP,FXD,CER DI:0.1UF,10%,25V	80009	283-5004-00
A7C401	283-5004-00			CAP,FXD,CER DI:0.1UF,10%,25V	80009	283-5004-00
A7C402	283-5004-00			CAP,FXD,CER DI:0.1UF,10%,25V	80009	283-5004-00
A7C403	283-5004-00			CAP,FXD,CER DI:0.1UF,10%,25V	80009	283-5004-00
A7C404	283-5004-00			CAP,FXD,CER DI:0.1UF,10%,25V	80009	283-5004-00
A7C440	283-5004-00			CAP,FXD,CER DI:0.1UF,10%,25V	80009	283-5004-00
A7C441	283-5004-00			CAP,FXD,CER DI:0.1UF,10%,25V	80009	283-5004-00
A7C442	283-5004-00			CAP,FXD,CER DI:0.1UF,10%,25V	80009	283-5004-00
A7C450	283-5004-00			CAP,FXD,CER DI:0.1UF,10%,25V	80009	283-5004-00
A7C460	283-5004-00	B010100	B010236	CAP,FXD,CER DI:0.1UF,10%,25V	80009	283-5004-00
A7C462	290-0944-00			CAP,FXD,ELCTLT:220UF,+50-20%,10V	55680	UVX1C221MPA
A7C470	283-5004-00			CAP,FXD,CER DI:0.1UF,10%,25V	80009	283-5004-00
A7C473	283-5004-00			CAP,FXD,CER DI:0.1UF,10%,25V	80009	283-5004-00
A7C480	283-5004-00			CAP,FXD,CER DI:0.1UF,10%,25V	80009	283-5004-00
A7C481	283-5004-00			CAP,FXD,CER DI:0.1UF,10%,25V	80009	283-5004-00
A7C490	283-5004-00			CAP,FXD,CER DI:0.1UF,10%,25V	80009	283-5004-00
A7C491	283-5004-00			CAP,FXD,CER DI:0.1UF,10%,25V	80009	283-5004-00
A7C500	283-5004-00			CAP,FXD,CER DI:0.1UF,10%,25V	80009	283-5004-00
A7C501	283-5004-00			CAP,FXD,CER DI:0.1UF,10%,25V	80009	283-5004-00
A7C502	283-5004-00			CAP,FXD,CER DI:0.1UF,10%,25V	80009	283-5004-00
A7C510	283-5016-00			CAP,FXD,CER DI:1UF,10%,50V	80009	283-5016-00
A7C511	283-5002-00			CAP,FXD,CER DI:1000PF,10%,50V	80009	283-5002-00
A7C512	283-5022-00			CAP,FXD,CER DI:47PF,5%,50V	54583	
A7C513	283-5003-00			CAP,FXD,CER DI:0.01UF,10%,50V	80009	283-5003-00
A7C520	283-5004-00			CAP,FXD,CER DI:0.1UF,10%,25V	80009	283-5004-00
A7C521	283-5004-00			CAP,FXD,CER DI:0.1UF,10%,25V	80009	283-5004-00
A7C530	283-5004-00			CAP,FXD,CER DI:0.1UF,10%,25V	80009	283-5004-00
A7C531	283-5004-00			CAP,FXD,CER DI:0.1UF,10%,25V	80009	283-5004-00
A7C540	283-5004-00			CAP,FXD,CER DI:0.1UF,10%,25V	80009	283-5004-00
A7C550	283-5004-00	B010100	B010236	CAP,FXD,CER DI:0.1UF,10%,25V	80009	283-5004-00
A7C551	283-5004-00	B010100	B010236	CAP,FXD,CER DI:0.1UF,10%,25V	80009	283-5004-00
A7C560	290-0804-00			CAP,FXD,ELCTLT:10UF,+50-20%,25V	80009	290-0804-00
A7C570	290-0804-00			CAP,FXD,ELCTLT:10UF,+50-20%,25V	80009	290-0804-00
A7C572	283-5003-00			CAP,FXD,CER DI:0.01UF,10%,50V	80009	283-5003-00
A7C573	283-5004-00			CAP,FXD,CER DI:0.1UF,10%,25V	80009	283-5004-00
A7C580	283-5004-00			CAP,FXD,CER DI:0.1UF,10%,25V	80009	283-5004-00
A7C581	283-5004-00			CAP,FXD,CER DI:0.1UF,10%,25V	80009	283-5004-00
A7C582	283-5004-00			CAP,FXD,CER DI:0.1UF,10%,25V	80009	283-5004-00
A7C590	283-5004-00			CAP,FXD,CER DI:0.1UF,10%,25V	80009	283-5004-00
A7C591	283-5004-00			CAP,FXD,CER DI:0.1UF,10%,25V	80009	283-5004-00
A7C600	283-5004-00			CAP,FXD,CER DI:0.1UF,10%,25V	80009	283-5004-00
A7C610	283-5001-00			CAP,FXD,CER DI:100PF,5%,50V	80009	283-5001-00
A7C611	283-5001-00			CAP,FXD,CER DI:100PF,5%,50V	80009	283-5001-00
A7C612	283-5014-00			CAP,FXD,CER DI:330PF,5%,50V	80009	283-5014-00

Component No.	Tektronix Part No.	Serial/Assembly No. Effective	Dscont	Name & Description	Mfr. Code	Mfr. Part No.
A7C613	283-5009-00			CAP,FXD,CER DI:15PF,5%,50V	54583	C3216C0G1H150J
A7C614	283-5025-00			CAP,FXD,CER DI:220PF,5%,50V	80009	283-5025-00
A7C615	283-5011-00			CAP,FXD,CER DI:33PF,5%,50V	95275	VJ1206A330JXA
A7C640	283-5004-00			CAP,FXD,CER DI:0.1UF,10%,25V	80009	283-5004-00
A7C641	283-5004-00			CAP,FXD,CER DI:0.1UF,10%,25V	80009	283-5004-00
A7C642	283-5004-00			CAP,FXD,CER DI:0.1UF,10%,25V	80009	283-5004-00
A7C650	283-5004-00			CAP,FXD,CER DI:0.1UF,10%,25V	80009	283-5004-00
A7C660	283-5002-00			CAP,FXD,CER DI:1000PF,10%,50V	80009	283-5002-00
A7C661	283-5002-00			CAP,FXD,CER DI:1000PF,10%,50V	80009	283-5002-00
A7C662	283-5004-00			CAP,FXD,CER DI:0.1UF,10%,25V	80009	283-5004-00
A7C665	283-5004-00			CAP,FXD,CER DI:0.1UF,10%,25V	80009	283-5004-00
A7C666	283-5004-00			CAP,FXD,CER DI:0.1UF,10%,25V	80009	283-5004-00
A7C670	283-5004-00			CAP,FXD,CER DI:0.1UF,10%,25V	80009	283-5004-00
A7C671	283-5004-00			CAP,FXD,CER DI:0.1UF,10%,25V	80009	283-5004-00
A7C680	283-5004-00			CAP,FXD,CER DI:0.1UF,10%,25V	80009	283-5004-00
A7C681	290-0944-00			CAP,FXD,ELCTLT:220UF,+50-20%,10V	55680	UVX1C221MPA
A7C690	290-0944-00			CAP,FXD,ELCTLT:220UF,+50-20%,10V	55680	UVX1C221MPA
A7C691	283-5004-00			CAP,FXD,CER DI:0.1UF,10%,25V	80009	283-5004-00
A7C692	283-5004-00			CAP,FXD,CER DI:0.1UF,10%,25V	80009	283-5004-00
A7C710	283-5004-00			CAP,FXD,CER DI:0.1UF,10%,25V	80009	283-5004-00
A7C720	283-5004-00			CAP,FXD,CER DI:0.1UF,10%,25V	80009	283-5004-00
A7C730	283-5004-00			CAP,FXD,CER DI:0.1UF,10%,25V	80009	283-5004-00
A7C740	283-5004-00			CAP,FXD,CER DI:0.1UF,10%,25V	80009	283-5004-00
A7C741	283-5004-00			CAP,FXD,CER DI:0.1UF,10%,25V	80009	283-5004-00
A7C742	283-5004-00			CAP,FXD,CER DI:0.1UF,10%,25V	80009	283-5004-00
A7C750	283-5027-00			CAP,FXD,CER DI:470PF,5%,50V	54583	
A7C751	283-5004-00			CAP,FXD,CER DI:0.1UF,10%,25V	80009	283-5004-00
A7C752	283-5004-00			CAP,FXD,CER DI:0.1UF,10%,25V	80009	283-5004-00
A7C760	283-5002-00			CAP,FXD,CER DI:1000PF,10%,50V	80009	283-5002-00
A7C761	283-5004-00			CAP,FXD,CER DI:0.1UF,10%,25V	80009	283-5004-00
A7C762	283-5001-00			CAP,FXD,CER DI:100PF,5%,50V	80009	283-5001-00
A7C800	283-5004-00			CAP,FXD,CER DI:0.1UF,10%,25V	80009	283-5004-00
A7C801	283-5004-00			CAP,FXD,CER DI:0.1UF,10%,25V	80009	283-5004-00
A7C802	283-5004-00			CAP,FXD,CER DI:0.1UF,10%,25V	80009	283-5004-00
A7C803	283-5001-00			CAP,FXD,CER DI:100PF,5%,50V	80009	283-5001-00
A7C804	283-5025-00			CAP,FXD,CER DI:220PF,5%,50V	80009	283-5025-00
A7C805	283-5001-00			CAP,FXD,CER DI:100PF,5%,50V	80009	283-5001-00
A7C806	283-5011-00			CAP,FXD,CER DI:33PF,5%,50V	95275	VJ1206A330JXA
A7C807	283-5009-00			CAP,FXD,CER DI:15PF,5%,50V	54583	C3216C0G1H150J
A7C900	283-5014-00			CAP,FXD,CER DI:330PF,5%,50V	80009	283-5014-00
A7C950	283-5004-00			CAP,FXD,CER DI:0.1UF,10%,25V	80009	283-5004-00
A7C951	283-5004-00			CAP,FXD,CER DI:0.1UF,10%,25V	80009	283-5004-00
A7C952	283-5004-00			CAP,FXD,CER DI:0.1UF,10%,25V	80009	283-5004-00
A7C960	283-5004-00			CAP,FXD,CER DI:0.1UF,10%,25V	80009	283-5004-00
A7C961	283-5004-00			CAP,FXD,CER DI:0.1UF,10%,25V	80009	283-5004-00
A7C962	283-5003-00			CAP,FXD,CER DI:0.01UF,10%,50V	80009	283-5003-00
A7C970	283-5003-00			CAP,FXD,CER DI:0.01UF,10%,50V	80009	283-5003-00
A7CR291	152-5043-00			SEMICOND DVC,DI:PIN,SI,100V,2.5 OHM,0.35PF, 0.35PF,SOT-23,HSMP-3802	80009	152-5043-00
A7CR300	152-5005-00			DIODE,SIG:,ULTRA FAST;70V,0.15A,6NS,COM-ANO DE;BAW56,SOT-23,8MM TR	80009	152-5005-00
A7CR420	152-5004-00			DIODE,SIG:,ULTRA FAST;70V,0.15A,6NS,SER-PAI R;BAV99,SOT-23,8MM TR	25088	BAV99T
A7CR520	152-5004-00			DIODE,SIG:,ULTRA FAST;70V,0.15A,6NS,SER-PAI R;BAV99,SOT-23,8MM TR	25088	BAV99T
A7CR580	152-5004-00			DIODE,SIG:,ULTRA FAST;70V,0.15A,6NS,SER-PAI R;BAV99,SOT-23,8MM TR	25088	BAV99T
A7CR620	152-5004-00			DIODE,SIG:,ULTRA FAST;70V,0.15A,6NS,SER-PAI R;BAV99,SOT-23,8MM TR	25088	BAV99T

Component No.	Tektronix Part No.	Serial/Assembly No. Effective	Dscont	Name & Description	Mfr. Code	Mfr. Part No.
A7CR720	152-5004-00			DIODE,SIG:,ULTRA FAST;70V,0.15A,6NS,SER-PAIR;BAV99,SOT-23,8MM TR	25088	BAV99T
A7J110	131-1857-00			CONN,HDR:PCB,;MALE,STR,1 X 36,0.1 CTR,0.230 MLG X 0.100 TAIL,GOLD;,,	58050	082-3644-SS10
A7J111	131-1857-00			CONN,HDR:PCB,;MALE,STR,1 X 36,0.1 CTR,0.230 MLG X 0.100 TAIL,GOLD;,,	58050	082-3644-SS10
A7J160	131-0391-01			CONN,RF JACK:	80009	131-0391-01
A7J190	131-0391-01			CONN,RF JACK:	80009	131-0391-01
A7J260	131-0391-01			CONN,RF JACK:	80009	131-0391-01
A7J360	131-1425-00			CONN,HDR:PCB,;MALE,RTANG,1 X 36,0.1 CTR,0.230 MLG X 0.090 TAIL,30 GOLD,STACKABLE;,,	22526	65521-136
A7J570	131-1857-00			CONN,HDR:PCB,;MALE,STR,1 X 36,0.1 CTR,0.230 MLG X 0.100 TAIL,GOLD;,,	58050	082-3644-SS10
A7L140	108-5069-00			COIL,RF:FXD,120UH,5%	80009	108-5069-00
A7L350	108-5037-00			COIL,RF:INDUCTOR,;22UH,10%,50 @ 2.52MHZ,SRF=20MHZ,DCR=3.2 OHMS,IDC=180;SMD, 12MM T&R	54583	NL453232T-220K
A7L351	108-5093-00			COIL,RF:	02113	1812LS-222 XKBA
A7L380	108-5046-00			COIL,RF:	80009	108-5046-00
A7L381	108-5046-00			COIL,RF:	80009	108-5046-00
A7L440	108-5037-00			COIL,RF:INDUCTOR,;22UH,10%,50 @ 2.52MHZ,SRF=20MHZ,DCR=3.2 OHMS,IDC=180;SMD, 12MM T&R	54583	NL453232T-220K
A7L441	108-5037-00			COIL,RF:INDUCTOR,;22UH,10%,50 @ 2.52MHZ,SRF=20MHZ,DCR=3.2 OHMS,IDC=180;SMD, 12MM T&R	54583	NL453232T-220K
A7L610	108-5018-00			COIL,RF:FXD,4.7UH,20%, Q=50, SRF 45 MHZ, DCR 1.0 OHM, I MAX	80009	108-5018-00
A7L611	108-5051-00			COIL,RF:FXD,10UH,10%, Q=50,SRF 20 MHZ, DCR 1.6 OHM,I MAX 250MASMD, 12 MM TAPED & REELED	54583	NL453232-100K
A7L612	108-5010-00			COIL,RF:	80009	108-5010-00
A7L680	108-1262-00			COIL,RF:FXD,100UH,10%,Q=30,SRF 8.2MHZ,DCR 0.23 OHM,I MAX 0.75ARADIAL LEAD	80009	108-1262-00
A7L690	108-1262-00			COIL,RF:FXD,100UH,10%,Q=30,SRF 8.2MHZ,DCR 0.23 OHM,I MAX 0.75ARADIAL LEAD	80009	108-1262-00
A7L760	108-5049-00			COIL,RF:	02113	1008CS-821-05
A7L800	108-5018-00			COIL,RF:FXD,4.7UH,20%, Q=50, SRF 45 MHZ, DCR 1.0 OHM, I MAX	80009	108-5018-00
A7L801	108-5010-00			COIL,RF:	80009	108-5010-00
A7L802	108-5051-00			COIL,RF:FXD,10UH,10%, Q=50,SRF 20 MHZ, DCR 1.6 OHM,I MAX 250MASMD, 12 MM TAPED & REELED	54583	NL453232-100K
A7P7	131-3556-00			CONN,RCPT,ELEC:CARD CONN,2 X 12,HORIZ	22526	66527-012
A7P110	131-3199-00			BUS,CONDUCTOR:SHUNT,;FEMALE,1 X 2,0.1 CTR,0.200 H,LOW PROFILE,JUMPER;,,	22526	76264-101
A7P570	131-3199-00			BUS,CONDUCTOR:SHUNT,;FEMALE,1 X 2,0.1 CTR,0.200 H,LOW PROFILE,JUMPER;,,	22526	76264-101
A7Q170	151-5001-00			TRANSISTOR,SIG:BIPOLAR,NPN;40V,200MA,300MHZ,AMPLIFIER;MMBT3904L,TO-236/SOT-23,8MM T&R	80009	151-5001-00
A7Q220	156-6140-00			IC,LINEAR:BIPOLAR,TRANSISTOR ARRAY;QUAD,NPN,INDEPENDENT,MATCHED;MAT04FS,SO14.150,TUBE	80009	156-6140-00
A7Q310	151-5000-00			TRANSISTOR,SIG:BIPOLAR,PNP;40V,200MA,250MHZ,AMPLIFIER;MMBT3906L,TO-236/SOT-23,8MM T&R	04713	MMBT3906LT1
A7Q311	151-5000-00			TRANSISTOR,SIG:BIPOLAR,PNP;40V,200MA,250MHZ,AMPLIFIER;MMBT3906L,TO-236/SOT-23,8MM T&R	04713	MMBT3906LT1
A7Q312	151-5000-00			TRANSISTOR,SIG:BIPOLAR,PNP;40V,200MA,250MHZ,AMPLIFIER;MMBT3906L,TO-236/SOT-23,8MM T&R	04713	MMBT3906LT1
A7Q313	151-5000-00			TRANSISTOR,SIG:BIPOLAR,PNP;40V,200MA,250MHZ,AMPLIFIER;MMBT3906L,TO-236/SOT-23,8MM T&R	04713	MMBT3906LT1
A7Q330	151-5000-00			TRANSISTOR,SIG:BIPOLAR,PNP;40V,200MA,250MHZ,AMPLIFIER;MMBT3906L,TO-236/SOT-23,8MM T&R	04713	MMBT3906LT1

Component No.	Tektronix Part No.	Serial/Assembly No. Effective	Dscont	Name & Description	Mfr. Code	Mfr. Part No.
A7Q340	151-5001-00			TRANSISTOR,SIG:BIPOLAR,NPN;40V,200MA,300MHZ ,AMPLIFIER;MMBT3904L,TO-236/SOT-23,8MM T&R	80009	151-5001-00
A7Q420	151-5001-00			TRANSISTOR,SIG:BIPOLAR,NPN;40V,200MA,300MHZ ,AMPLIFIER;MMBT3904L,TO-236/SOT-23,8MM T&R	80009	151-5001-00
A7Q421	151-5000-00			TRANSISTOR,SIG:BIPOLAR,PNP;40V,200MA,250MHZ ,AMPLIFIER;MMBT3906L,TO-236/SOT-23,8MM T&R	04713	MMBT3906LT1
A7Q460	151-5001-00			TRANSISTOR,SIG:BIPOLAR,NPN;40V,200MA,300MHZ ,AMPLIFIER;MMBT3904L,TO-236/SOT-23,8MM T&R	80009	151-5001-00
A7Q600	151-5000-00			TRANSISTOR,SIG:BIPOLAR,PNP;40V,200MA,250MHZ ,AMPLIFIER;MMBT3906L,TO-236/SOT-23,8MM T&R	04713	MMBT3906LT1
A7Q601	151-5001-00			TRANSISTOR,SIG:BIPOLAR,NPN;40V,200MA,300MHZ ,AMPLIFIER;MMBT3904L,TO-236/SOT-23,8MM T&R	80009	151-5001-00
A7Q680	151-5001-00			TRANSISTOR,SIG:BIPOLAR,NPN;40V,200MA,300MHZ ,AMPLIFIER;MMBT3904L,TO-236/SOT-23,8MM T&R	80009	151-5001-00
A7Q960	151-5000-00			TRANSISTOR,SIG:BIPOLAR,PNP;40V,200MA,250MHZ ,AMPLIFIER;MMBT3906L,TO-236/SOT-23,8MM T&R	04713	MMBT3906LT1
A7Q970	151-5000-00			TRANSISTOR,SIG:BIPOLAR,PNP;40V,200MA,250MHZ ,AMPLIFIER;MMBT3906L,TO-236/SOT-23,8MM T&R	04713	MMBT3906LT1
A7R100	321-5027-00			RES,FXD:METAL FILM;5.62K OHM,1%,0.125W,TC=1 00 PPM;1206,T&R	80009	321-5027-00
A7R101	321-5020-00			RES,FXD:METAL FILM;1.5K OHM,1%,0.125W,TC=10 0 PPM;1206,T&R	80009	321-5020-00
A7R102	321-5039-00			RES,FXD:METAL FILM;56.2K OHM,1%,0.125W,TC=1 00 PPM;1206,T&R	80009	321-5039-00
A7R103	321-5039-00			RES,FXD:METAL FILM;56.2K OHM,1%,0.125W,TC=1 00 PPM;1206,T&R	80009	321-5039-00
A7R110	321-5041-00			RES,FXD:METAL FILM;82.5K OHM,1%,0.125W,TC=1 00 PPM;1206,T&R	80009	321-5041-00
A7R111	321-5018-00			RES,FXD:METAL FILM;1.0K OHM,1%,0.125W,TC=10 0 PPM;1206,T&R	80009	321-5018-00
A7R112	321-5018-00			RES,FXD:METAL FILM;1.0K OHM,1%,0.125W,TC=10 0 PPM;1206,T&R	80009	321-5018-00
A7R113	321-5030-00			RES,FXD:METAL FILM;10.0K OHM,1%,0.125W,TC=1 00 PPM;1206,T&R	80009	321-5030-00
A7R114	311-1239-00			RES,VAR,TRMR:CERMET;2.5K OHM,10%,0.5W,0.375 SQ,SIDE ADJUST	80009	311-1239-00
A7R115	321-5030-00			RES,FXD:METAL FILM;10.0K OHM,1%,0.125W,TC=1 00 PPM;1206,T&R	80009	321-5030-00
A7R116	321-5019-00			RES,FXD:METAL FILM;1.21K OHM,1%,0.125W,TC=1 00 PPM;1206,T&R	80009	321-5019-00
A7R117	321-5041-00			RES,FXD:METAL FILM;82.5K OHM,1%,0.125W,TC=1 00 PPM;1206,T&R	80009	321-5041-00
A7R118	311-1245-00			RES,VAR,NONWW:TRMR,10K OHM,0.5W	80009	311-1245-00
A7R120	321-5034-00			RES,FXD:METAL FILM;22.1K OHM,1%,0.125W,TC=1 00 PPM;1206,T&R	80009	321-5034-00
A7R121	321-5035-00			RES,FXD:METAL FILM;27.4K OHM,1%,0.125W,TC=1 00 PPM;1206,T&R	80009	321-5035-00
A7R122	321-5049-00			RES,FXD:METAL FILM;1M OHM,1%,0.125W,TC=100 PPM;1206,T&R	80009	321-5049-00
A7R123	321-5014-00			RES,FXD:METAL FILM;475 OHM,1%,0.125W,TC=100 PPM;1206,T&R	80009	321-5014-00
A7R124	321-5019-00			RES,FXD:METAL FILM;1.21K OHM,1%,0.125W,TC=1 00 PPM;1206,T&R	80009	321-5019-00
A7R125	321-5025-00			RES,FXD:METAL FILM;3.92K OHM,1%,0.125W,TC=1 00 PPM;1206,T&R	80009	321-5025-00
A7R126	321-5018-00			RES,FXD:METAL FILM;1.0K OHM,1%,0.125W,TC=10 0 PPM;1206,T&R	80009	321-5018-00
A7R127	321-5022-00			RES,FXD:METAL FILM;2.21K OHM,1%,0.125W,TC=1 00 PPM;1206,T&R	80009	321-5022-00

Component No.	Tektronix Part No.	Serial/Assembly No. Effective	Dscont	Name & Description	Mfr. Code	Mfr. Part No.
A7R128	321-5022-00			RES,FXD:METAL FILM;2.21K OHM,1%,0.125W,TC=100 PPM;1206,T&R	80009	321-5022-00
A7R129	321-5014-00			RES,FXD:METAL FILM;475 OHM,1%,0.125W,TC=100 PPM;1206,T&R	80009	321-5014-00
A7R130	321-5014-00			RES,FXD:METAL FILM;475 OHM,1%,0.125W,TC=100 PPM;1206,T&R	80009	321-5014-00
A7R131	321-5014-00			RES,FXD:METAL FILM;475 OHM,1%,0.125W,TC=100 PPM;1206,T&R	80009	321-5014-00
A7R132	321-5006-00			RES,FXD:METAL FILM;100 OHM,1%,0.125W,TC=100 PPM;1206,T&R	80009	321-5006-00
A7R133	321-5023-00			RES,FXD:METAL FILM;2.74K OHM,1%,0.125W,TC=100 PPM;1206,T&R	80009	321-5023-00
A7R134	311-1237-00			RES,VAR,NONWW:1K OHM,10%,0.50W	80009	311-1237-00
A7R141	311-1245-00			RES,VAR,NONWW:TRMR,10K OHM,0.5W	80009	311-1245-00
A7R142	311-1245-00			RES,VAR,NONWW:TRMR,10K OHM,0.5W	80009	311-1245-00
A7R150	321-5015-00			RES,FXD:METAL FILM;562 OHM,1%,0.125W,TC=100 PPM;1206,T&R	80009	321-5015-00
A7R151	321-5030-00			RES,FXD:METAL FILM;10.0K OHM,1%,0.125W,TC=100 PPM;1206,T&R	80009	321-5030-00
A7R153	311-1239-00			RES,VAR,TRMR:CERMET;2.5K OHM,10%,0.5W,0.375 SQ,SIDE ADJUST	80009	311-1239-00
A7R160	311-1245-00			RES,VAR,NONWW:TRMR,10K OHM,0.5W	80009	311-1245-00
A7R170	321-5006-00			RES,FXD:METAL FILM;100 OHM,1%,0.125W,TC=100 PPM;1206,T&R	80009	321-5006-00
A7R171	321-5018-00			RES,FXD:METAL FILM;1.0K OHM,1%,0.125W,TC=100 PPM;1206,T&R	80009	321-5018-00
A7R172	311-1245-00			RES,VAR,NONWW:TRMR,10K OHM,0.5W	80009	311-1245-00
A7R180	321-5014-00			RES,FXD:METAL FILM;475 OHM,1%,0.125W,TC=100 PPM;1206,T&R	80009	321-5014-00
A7R181	321-5023-00			RES,FXD:METAL FILM;2.74K OHM,1%,0.125W,TC=100 PPM;1206,T&R	80009	321-5023-00
A7R182	321-5023-00			RES,FXD:METAL FILM;2.74K OHM,1%,0.125W,TC=100 PPM;1206,T&R	80009	321-5023-00
A7R183	321-5023-00			RES,FXD:METAL FILM;2.74K OHM,1%,0.125W,TC=100 PPM;1206,T&R	80009	321-5023-00
A7R200	321-5020-00			RES,FXD:METAL FILM;1.5K OHM,1%,0.125W,TC=100 PPM;1206,T&R	80009	321-5020-00
A7R201	321-5041-00			RES,FXD:METAL FILM;82.5K OHM,1%,0.125W,TC=100 PPM;1206,T&R	80009	321-5041-00
A7R202	321-5027-00			RES,FXD:METAL FILM;5.62K OHM,1%,0.125W,TC=100 PPM;1206,T&R	80009	321-5027-00
A7R203	321-5038-00			RES,FXD:METAL FILM;47.5K OHM,1%,0.125W,TC=100 PPM;1206,T&R	80009	321-5038-00
A7R204	321-5039-00			RES,FXD:METAL FILM;56.2K OHM,1%,0.125W,TC=100 PPM;1206,T&R	80009	321-5039-00
A7R205	321-5047-00			RES,FXD:METAL FILM;100K OHM,1%,0.125W,TC=100 PPM;1206,T&R	80009	321-5047-00
A7R210	321-5014-00			RES,FXD:METAL FILM;475 OHM,1%,0.125W,TC=100 PPM;1206,T&R	80009	321-5014-00
A7R220	321-5049-00			RES,FXD:METAL FILM;1M OHM,1%,0.125W,TC=100 PPM;1206,T&R	80009	321-5049-00
A7R221	321-5020-00			RES,FXD:METAL FILM;1.5K OHM,1%,0.125W,TC=100 PPM;1206,T&R	80009	321-5020-00
A7R222	321-5018-00			RES,FXD:METAL FILM;1.0K OHM,1%,0.125W,TC=100 PPM;1206,T&R	80009	321-5018-00
A7R223	321-5023-00			RES,FXD:METAL FILM;2.74K OHM,1%,0.125W,TC=100 PPM;1206,T&R	80009	321-5023-00
A7R224	321-5022-00			RES,FXD:METAL FILM;2.21K OHM,1%,0.125W,TC=100 PPM;1206,T&R	80009	321-5022-00

Component No.	Tektronix Part No.	Serial/Assembly No. Effective	Dscont	Name & Description	Mfr. Code	Mfr. Part No.
A7R225	321-5032-00			RES,FXD:METAL FILM;15.0K OHM,1%,0.125W,TC=100 PPM;1206,T&R	80009	321-5032-00
A7R230	321-5020-00			RES,FXD:METAL FILM;1.5K OHM,1%,0.125W,TC=100 PPM;1206,T&R	80009	321-5020-00
A7R240	321-5018-00			RES,FXD:METAL FILM;1.0K OHM,1%,0.125W,TC=100 PPM;1206,T&R	80009	321-5018-00
A7R241	321-5047-00			RES,FXD:METAL FILM;100K OHM,1%,0.125W,TC=100 PPM;1206,T&R	80009	321-5047-00
A7R243	321-5047-00			RES,FXD:METAL FILM;100K OHM,1%,0.125W,TC=100 PPM;1206,T&R	80009	321-5047-00
A7R250	321-5013-00			RES,FXD:METAL FILM;392 OHM,1%,0.125W,TC=100 PPM;1206,T&R	80009	321-5013-00
A7R251	321-5006-00			RES,FXD:METAL FILM;100 OHM,1%,0.125W,TC=100 PPM;1206,T&R	80009	321-5006-00
A7R252	321-5015-00			RES,FXD:METAL FILM;562 OHM,1%,0.125W,TC=100 PPM;1206,T&R	80009	321-5015-00
A7R253	321-5006-00			RES,FXD:METAL FILM;100 OHM,1%,0.125W,TC=100 PPM;1206,T&R	80009	321-5006-00
A7R254	321-5034-00			RES,FXD:METAL FILM;22.1K OHM,1%,0.125W,TC=100 PPM;1206,T&R	80009	321-5034-00
A7R255	321-5034-00			RES,FXD:METAL FILM;22.1K OHM,1%,0.125W,TC=100 PPM;1206,T&R	80009	321-5034-00
A7R256	321-5018-00			RES,FXD:METAL FILM;1.0K OHM,1%,0.125W,TC=100 PPM;1206,T&R	80009	321-5018-00
A7R260	321-5014-00			RES,FXD:METAL FILM;475 OHM,1%,0.125W,TC=100 PPM;1206,T&R	80009	321-5014-00
A7R270	321-5022-00			RES,FXD:METAL FILM;2.21K OHM,1%,0.125W,TC=100 PPM;1206,T&R	80009	321-5022-00
A7R271	321-5014-00			RES,FXD:METAL FILM;475 OHM,1%,0.125W,TC=100 PPM;1206,T&R	80009	321-5014-00
A7R272	321-5006-00			RES,FXD:METAL FILM;100 OHM,1%,0.125W,TC=100 PPM;1206,T&R	80009	321-5006-00
A7R280	321-5000-00			RES,FXD:METAL FILM;10 OHM,1%,0.125W,TC=100 PPM;1206,T&R	57668	MCR18EZHFW10E
A7R281	321-5006-00			RES,FXD:METAL FILM;100 OHM,1%,0.125W,TC=100 PPM;1206,T&R	80009	321-5006-00
A7R282	321-5020-00			RES,FXD:METAL FILM;1.5K OHM,1%,0.125W,TC=100 PPM;1206,T&R	80009	321-5020-00
A7R283	321-5004-00			RES,FXD:METAL FILM;22.1 OHM,1%,0.125W,TC=100 PPM;1206,T&R	80009	321-5004-00
A7R284	321-5023-00			RES,FXD:METAL FILM;2.74K OHM,1%,0.125W,TC=100 PPM;1206,T&R	80009	321-5023-00
A7R285	321-5010-00			RES,FXD:METAL FILM;221 OHM,1%,0.125W,TC=100 PPM;1206,T&R	80009	321-5010-00
A7R290	321-5000-00			RES,FXD:METAL FILM;10 OHM,1%,0.125W,TC=100 PPM;1206,T&R	57668	MCR18EZHFW10E
A7R294	321-5018-00			RES,FXD:METAL FILM;1.0K OHM,1%,0.125W,TC=100 PPM;1206,T&R	80009	321-5018-00
A7R300	321-5049-00			RES,FXD:METAL FILM;1M OHM,1%,0.125W,TC=100 PPM;1206,T&R	80009	321-5049-00
A7R301	321-5047-00			RES,FXD:METAL FILM;100K OHM,1%,0.125W,TC=100 PPM;1206,T&R	80009	321-5047-00
A7R302	321-5048-00			RES,FXD:METAL FILM;332K OHM,1%,0.125W,TC=100 PPM;1206,T&R	80009	321-5048-00
A7R303	321-5018-00			RES,FXD:METAL FILM;1.0K OHM,1%,0.125W,TC=100 PPM;1206,T&R	80009	321-5018-00
A7R310	321-5039-00			RES,FXD:METAL FILM;56.2K OHM,1%,0.125W,TC=100 PPM;1206,T&R	80009	321-5039-00

Component No.	Tektronix Part No.	Serial/Assembly No. Effective	Dscont	Name & Description	Mfr. Code	Mfr. Part No.
A7R311	321-5030-00			RES,FXD:METAL FILM;10.0K OHM,1%,0.125W,TC=100 PPM;1206,T&R	80009	321-5030-00
A7R312	321-5034-00			RES,FXD:METAL FILM;22.1K OHM,1%,0.125W,TC=100 PPM;1206,T&R	80009	321-5034-00
A7R313	321-5030-00			RES,FXD:METAL FILM;10.0K OHM,1%,0.125W,TC=100 PPM;1206,T&R	80009	321-5030-00
A7R314	321-5033-00			RES,FXD:METAL FILM;18.2K OHM,1%,0.125W,TC=100 PPM;1206,T&R	80009	321-5033-00
A7R315	321-5020-00			RES,FXD:METAL FILM;1.5K OHM,1%,0.125W,TC=100 PPM;1206,T&R	80009	321-5020-00
A7R316	321-5033-00			RES,FXD:METAL FILM;18.2K OHM,1%,0.125W,TC=100 PPM;1206,T&R	80009	321-5033-00
A7R317	321-5022-00			RES,FXD:METAL FILM;2.21K OHM,1%,0.125W,TC=100 PPM;1206,T&R	80009	321-5022-00
A7R318	321-5022-00			RES,FXD:METAL FILM;2.21K OHM,1%,0.125W,TC=100 PPM;1206,T&R	80009	321-5022-00
A7R319	321-5022-00			RES,FXD:METAL FILM;2.21K OHM,1%,0.125W,TC=100 PPM;1206,T&R	80009	321-5022-00
A7R320	321-5023-00			RES,FXD:METAL FILM;2.74K OHM,1%,0.125W,TC=100 PPM;1206,T&R	80009	321-5023-00
A7R321	321-5031-00			RES,FXD:METAL FILM;12.1K OHM,1%,0.125W,TC=100 PPM;1206,T&R	80009	321-5031-00
A7R322	321-5030-00			RES,FXD:METAL FILM;10.0K OHM,1%,0.125W,TC=100 PPM;1206,T&R	80009	321-5030-00
A7R323	321-5030-00			RES,FXD:METAL FILM;10.0K OHM,1%,0.125W,TC=100 PPM;1206,T&R	80009	321-5030-00
A7R324	321-5004-00			RES,FXD:METAL FILM;22.1 OHM,1%,0.125W,TC=100 PPM;1206,T&R	80009	321-5004-00
A7R325	321-5034-00			RES,FXD:METAL FILM;22.1K OHM,1%,0.125W,TC=100 PPM;1206,T&R	80009	321-5034-00
A7R326	321-5030-00			RES,FXD:METAL FILM;10.0K OHM,1%,0.125W,TC=100 PPM;1206,T&R	80009	321-5030-00
A7R327	321-5030-00			RES,FXD:METAL FILM;10.0K OHM,1%,0.125W,TC=100 PPM;1206,T&R	80009	321-5030-00
A7R330	321-5004-00			RES,FXD:METAL FILM;22.1 OHM,1%,0.125W,TC=100 PPM;1206,T&R	80009	321-5004-00
A7R331	321-5047-00			RES,FXD:METAL FILM;100K OHM,1%,0.125W,TC=100 PPM;1206,T&R	80009	321-5047-00
A7R332	321-5030-00			RES,FXD:METAL FILM;10.0K OHM,1%,0.125W,TC=100 PPM;1206,T&R	80009	321-5030-00
A7R333	321-5018-00			RES,FXD:METAL FILM;1.0K OHM,1%,0.125W,TC=100 PPM;1206,T&R	80009	321-5018-00
A7R334	321-5018-00			RES,FXD:METAL FILM;1.0K OHM,1%,0.125W,TC=100 PPM;1206,T&R	80009	321-5018-00
A7R335	321-5047-00			RES,FXD:METAL FILM;100K OHM,1%,0.125W,TC=100 PPM;1206,T&R	80009	321-5047-00
A7R340	321-5030-00	B010100	B010325	RES,FXD:METAL FILM;10.0K OHM,1%,0.125W,TC=100 PPM;1206,T&R	80009	321-5030-00
A7R340	321-5018-00	B010326		RES,FXD:METAL FILM;1.0K OHM,1%,0.125W,TC=100 PPM;1206,T&R	80009	321-5018-00
A7R341	321-5018-00			RES,FXD:METAL FILM;1.0K OHM,1%,0.125W,TC=100 PPM;1206,T&R	80009	321-5018-00
A7R342	321-5030-00			RES,FXD:METAL FILM;10.0K OHM,1%,0.125W,TC=100 PPM;1206,T&R	80009	321-5030-00
A7R343	321-5004-00			RES,FXD:METAL FILM;22.1 OHM,1%,0.125W,TC=100 PPM;1206,T&R	80009	321-5004-00
A7R351	321-5023-00			RES,FXD:METAL FILM;2.74K OHM,1%,0.125W,TC=100 PPM;1206,T&R	80009	321-5023-00

Component No.	Tektronix Part No.	Serial/Assembly No. Effective	Dscont	Name & Description	Mfr. Code	Mfr. Part No.
A7R354	321-5018-00			RES,FXD:METAL FILM;1.0K OHM,1%,0.125W,TC=100 PPM;1206,T&R	80009	321-5018-00
A7R360	321-5043-00			RES,FXD:METAL FILM;47.5 OHM,1%,0.125W,TC=100 PPM;1206,T&R	80009	321-5043-00
A7R361	321-5030-00	B010100	B010325	RES,FXD:METAL FILM;10.0K OHM,1%,0.125W,TC=100 PPM;1206,T&R	80009	321-5030-00
A7R361	321-5018-00	B010326		RES,FXD:METAL FILM;1.0K OHM,1%,0.125W,TC=100 PPM;1206,T&R	80009	321-5018-00
A7R370	321-5047-00			RES,FXD:METAL FILM;100K OHM,1%,0.125W,TC=100 PPM;1206,T&R	80009	321-5047-00
A7R390	321-5023-00			RES,FXD:METAL FILM;2.74K OHM,1%,0.125W,TC=100 PPM;1206,T&R	80009	321-5023-00
A7R391	321-5030-00			RES,FXD:METAL FILM;10.0K OHM,1%,0.125W,TC=100 PPM;1206,T&R	80009	321-5030-00
A7R392	321-5043-00			RES,FXD:METAL FILM;47.5 OHM,1%,0.125W,TC=100 PPM;1206,T&R	80009	321-5043-00
A7R393	321-5030-00			RES,FXD:METAL FILM;10.0K OHM,1%,0.125W,TC=100 PPM;1206,T&R	80009	321-5030-00
A7R394	321-5030-00			RES,FXD:METAL FILM;10.0K OHM,1%,0.125W,TC=100 PPM;1206,T&R	80009	321-5030-00
A7R395	321-5018-00			RES,FXD:METAL FILM;1.0K OHM,1%,0.125W,TC=100 PPM;1206,T&R	80009	321-5018-00
A7R400	321-5013-00			RES,FXD:METAL FILM;392 OHM,1%,0.125W,TC=100 PPM;1206,T&R	80009	321-5013-00
A7R401	321-5013-00			RES,FXD:METAL FILM;392 OHM,1%,0.125W,TC=100 PPM;1206,T&R	80009	321-5013-00
A7R402	321-5014-00			RES,FXD:METAL FILM;475 OHM,1%,0.125W,TC=100 PPM;1206,T&R	80009	321-5014-00
A7R410	321-5020-00			RES,FXD:METAL FILM;1.5K OHM,1%,0.125W,TC=100 PPM;1206,T&R	80009	321-5020-00
A7R411	321-5032-00			RES,FXD:METAL FILM;15.0K OHM,1%,0.125W,TC=100 PPM;1206,T&R	80009	321-5032-00
A7R412	321-5032-00			RES,FXD:METAL FILM;15.0K OHM,1%,0.125W,TC=100 PPM;1206,T&R	80009	321-5032-00
A7R413	321-5023-00			RES,FXD:METAL FILM;2.74K OHM,1%,0.125W,TC=100 PPM;1206,T&R	80009	321-5023-00
A7R414	321-5032-00			RES,FXD:METAL FILM;15.0K OHM,1%,0.125W,TC=100 PPM;1206,T&R	80009	321-5032-00
A7R415	321-5026-00			RES,FXD:METAL FILM;4.75K OHM,1%,0.125W,TC=100 PPM;1206,T&R	80009	321-5026-00
A7R416	321-5020-00			RES,FXD:METAL FILM;1.5K OHM,1%,0.125W,TC=100 PPM;1206,T&R	80009	321-5020-00
A7R417	321-5038-00			RES,FXD:METAL FILM;47.5K OHM,1%,0.125W,TC=100 PPM;1206,T&R	80009	321-5038-00
A7R420	321-5017-00			RES,FXD:METAL FILM;825 OHM,1%,0.125W,TC=100 PPM;1206,T&R	80009	321-5017-00
A7R421	321-5007-00			RES,FXD:METAL FILM;121 OHM,1%,0.125W,TC=100 PPM;1206,T&R	80009	321-5007-00
A7R422	321-5018-00			RES,FXD:METAL FILM;1.0K OHM,1%,0.125W,TC=100 PPM;1206,T&R	80009	321-5018-00
A7R430	321-5006-00			RES,FXD:METAL FILM;100 OHM,1%,0.125W,TC=100 PPM;1206,T&R	80009	321-5006-00
A7R431	311-1936-00			RES,VAR,NONWW:TRMR,50 OHM,20%,0.5W	32997	3386X-1-500
A7R432	321-5014-00			RES,FXD:METAL FILM;475 OHM,1%,0.125W,TC=100 PPM;1206,T&R	80009	321-5014-00
A7R433	321-5014-00			RES,FXD:METAL FILM;475 OHM,1%,0.125W,TC=100 PPM;1206,T&R	80009	321-5014-00
A7R434	321-5013-00			RES,FXD:METAL FILM;392 OHM,1%,0.125W,TC=100 PPM;1206,T&R	80009	321-5013-00

Component No.	Tektronix Part No.	Serial/Assembly No. Effective	Dscont	Name & Description	Mfr. Code	Mfr. Part No.
A7R435	321-5014-00			RES,FXD:METAL FILM;475 OHM,1%,0.125W,TC=100 PPM;1206,T&R	80009	321-5014-00
A7R436	321-5026-00			RES,FXD:METAL FILM;4.75K OHM,1%,0.125W,TC=100 PPM;1206,T&R	80009	321-5026-00
A7R437	321-5006-00			RES,FXD:METAL FILM;100 OHM,1%,0.125W,TC=100 PPM;1206,T&R	80009	321-5006-00
A7R438	321-5015-00			RES,FXD:METAL FILM;562 OHM,1%,0.125W,TC=100 PPM;1206,T&R	80009	321-5015-00
A7R439	321-5015-00			RES,FXD:METAL FILM;562 OHM,1%,0.125W,TC=100 PPM;1206,T&R	80009	321-5015-00
A7R440	321-5018-00			RES,FXD:METAL FILM;1.0K OHM,1%,0.125W,TC=100 PPM;1206,T&R	80009	321-5018-00
A7R441	321-5030-00	B010100	B010325	RES,FXD:METAL FILM;10.0K OHM,1%,0.125W,TC=100 PPM;1206,T&R	80009	321-5030-00
A7R441	321-5018-00	B010326		RES,FXD:METAL FILM;1.0K OHM,1%,0.125W,TC=100 PPM;1206,T&R	80009	321-5018-00
A7R442	321-5006-00			RES,FXD:METAL FILM;100 OHM,1%,0.125W,TC=100 PPM;1206,T&R	80009	321-5006-00
A7R443	321-5030-00			RES,FXD:METAL FILM;10.0K OHM,1%,0.125W,TC=100 PPM;1206,T&R	80009	321-5030-00
A7R450	321-5006-00			RES,FXD:METAL FILM;100 OHM,1%,0.125W,TC=100 PPM;1206,T&R	80009	321-5006-00
A7R451	321-5018-00			RES,FXD:METAL FILM;1.0K OHM,1%,0.125W,TC=100 PPM;1206,T&R	80009	321-5018-00
A7R452	321-5014-00			RES,FXD:METAL FILM;475 OHM,1%,0.125W,TC=100 PPM;1206,T&R	80009	321-5014-00
A7R453	321-5043-00			RES,FXD:METAL FILM;47.5 OHM,1%,0.125W,TC=100 PPM;1206,T&R	80009	321-5043-00
A7R454	321-5024-00	B010100	B010236	RES,FXD:METAL FILM;3.32K OHM,1%,0.125W,TC=100 PPM;1206,T&R	80009	321-5024-00
A7R455	321-5000-00	B010100	B010236	RES,FXD:METAL FILM;10 OHM,1%,0.125W,TC=100 PPM;1206,T&R	57668	MCR18EZHFW10E
A7R460	321-5000-00			RES,FXD:METAL FILM;10 OHM,1%,0.125W,TC=100 PPM;1206,T&R	57668	MCR18EZHFW10E
A7R461	321-5000-00			RES,FXD:METAL FILM;10 OHM,1%,0.125W,TC=100 PPM;1206,T&R	57668	MCR18EZHFW10E
A7R462	321-5030-00			RES,FXD:METAL FILM;10.0K OHM,1%,0.125W,TC=100 PPM;1206,T&R	80009	321-5030-00
A7R463	321-5030-00			RES,FXD:METAL FILM;10.0K OHM,1%,0.125W,TC=100 PPM;1206,T&R	80009	321-5030-00
A7R464	311-1237-00	B010100	B010236	RES,VAR,NONWW:1K OHM,10%,0.50W	80009	311-1237-00
A7R465	321-5023-00	B010100	B010236	RES,FXD:METAL FILM;2.74K OHM,1%,0.125W,TC=100 PPM;1206,T&R	80009	321-5023-00
A7R466	311-1245-00			RES,VAR,NONWW:TRMR,10K OHM,0.5W	80009	311-1245-00
A7R470	321-5000-00			RES,FXD:METAL FILM;10 OHM,1%,0.125W,TC=100 PPM;1206,T&R	57668	MCR18EZHFW10E
A7R471	321-5000-00			RES,FXD:METAL FILM;10 OHM,1%,0.125W,TC=100 PPM;1206,T&R	57668	MCR18EZHFW10E
A7R472	321-5030-00			RES,FXD:METAL FILM;10.0K OHM,1%,0.125W,TC=100 PPM;1206,T&R	80009	321-5030-00
A7R473	321-5030-00			RES,FXD:METAL FILM;10.0K OHM,1%,0.125W,TC=100 PPM;1206,T&R	80009	321-5030-00
A7R480	321-5032-00			RES,FXD:METAL FILM;15.0K OHM,1%,0.125W,TC=100 PPM;1206,T&R	80009	321-5032-00
A7R481	321-5040-00			RES,FXD:METAL FILM;68.1K OHM,1%,0.125W,TC=100 PPM;1206,T&R	80009	321-5040-00
A7R482	321-5030-00			RES,FXD:METAL FILM;10.0K OHM,1%,0.125W,TC=100 PPM;1206,T&R	80009	321-5030-00

Component No.	Tektronix Part No.	Serial/Assembly No. Effective	Dscont	Name & Description	Mfr. Code	Mfr. Part No.
A7R483	321-5030-00			RES,FXD:METAL FILM;10.0K OHM,1%,0.125W,TC=100 PPM;1206,T&R	80009	321-5030-00
A7R490	321-5010-00			RES,FXD:METAL FILM;221 OHM,1%,0.125W,TC=100 PPM;1206,T&R	80009	321-5010-00
A7R500	311-1237-00			RES,VAR,NONWW:1K OHM,10%,0.50W	80009	311-1237-00
A7R501	311-1236-00			RES,VAR,NONWW:TRMR,250 OHM,0.5W	80009	311-1236-00
A7R503	321-5018-00			RES,FXD:METAL FILM;1.0K OHM,1%,0.125W,TC=100 PPM;1206,T&R	80009	321-5018-00
A7R504	321-5004-00			RES,FXD:METAL FILM;22.1 OHM,1%,0.125W,TC=100 PPM;1206,T&R	80009	321-5004-00
A7R510	321-5030-00			RES,FXD:METAL FILM;10.0K OHM,1%,0.125W,TC=100 PPM;1206,T&R	80009	321-5030-00
A7R520	321-5030-00			RES,FXD:METAL FILM;10.0K OHM,1%,0.125W,TC=100 PPM;1206,T&R	80009	321-5030-00
A7R521	321-5030-00			RES,FXD:METAL FILM;10.0K OHM,1%,0.125W,TC=100 PPM;1206,T&R	80009	321-5030-00
A7R523	321-5004-00			RES,FXD:METAL FILM;22.1 OHM,1%,0.125W,TC=100 PPM;1206,T&R	80009	321-5004-00
A7R525	321-5004-00			RES,FXD:METAL FILM;22.1 OHM,1%,0.125W,TC=100 PPM;1206,T&R	80009	321-5004-00
A7R526	311-1244-00			RES,VAR,NONWW:TRMR,100 OHM,0.5W	80009	311-1244-00
A7R527	321-5016-00			RES,FXD:METAL FILM;681 OHM,1%,0.125W,TC=100 PPM;1206,T&R	01121	BCK6810FT
A7R530	321-5043-00			RES,FXD:METAL FILM;47.5 OHM,1%,0.125W,TC=100 PPM;1206,T&R	80009	321-5043-00
A7R531	321-5000-00			RES,FXD:METAL FILM;10 OHM,1%,0.125W,TC=100 PPM;1206,T&R	57668	MCR18EZHFW10E
A7R532	321-5020-00			RES,FXD:METAL FILM;1.5K OHM,1%,0.125W,TC=100 PPM;1206,T&R	80009	321-5020-00
A7R533	321-5014-00			RES,FXD:METAL FILM;475 OHM,1%,0.125W,TC=100 PPM;1206,T&R	80009	321-5014-00
A7R540	321-5000-00			RES,FXD:METAL FILM;10 OHM,1%,0.125W,TC=100 PPM;1206,T&R	57668	MCR18EZHFW10E
A7R541	321-5004-00			RES,FXD:METAL FILM;22.1 OHM,1%,0.125W,TC=100 PPM;1206,T&R	80009	321-5004-00
A7R542	321-5020-00			RES,FXD:METAL FILM;1.5K OHM,1%,0.125W,TC=100 PPM;1206,T&R	80009	321-5020-00
A7R543	321-5043-00			RES,FXD:METAL FILM;47.5 OHM,1%,0.125W,TC=100 PPM;1206,T&R	80009	321-5043-00
A7R550	321-5000-00	B010100	B010236	RES,FXD:METAL FILM;10 OHM,1%,0.125W,TC=100 PPM;1206,T&R	57668	MCR18EZHFW10E
A7R570	321-5029-00			RES,FXD:METAL FILM;8.25K OHM,1%,0.125W,TC=100 PPM;1206,T&R	80009	321-5029-00
A7R571	321-5047-00			RES,FXD:METAL FILM;100K OHM,1%,0.125W,TC=100 PPM;1206,T&R	80009	321-5047-00
A7R572	321-5047-00			RES,FXD:METAL FILM;100K OHM,1%,0.125W,TC=100 PPM;1206,T&R	80009	321-5047-00
A7R580	321-5004-00			RES,FXD:METAL FILM;22.1 OHM,1%,0.125W,TC=100 PPM;1206,T&R	80009	321-5004-00
A7R581	321-5034-00			RES,FXD:METAL FILM;22.1K OHM,1%,0.125W,TC=100 PPM;1206,T&R	80009	321-5034-00
A7R582	321-5030-00			RES,FXD:METAL FILM;10.0K OHM,1%,0.125W,TC=100 PPM;1206,T&R	80009	321-5030-00
A7R583	321-5030-00			RES,FXD:METAL FILM;10.0K OHM,1%,0.125W,TC=100 PPM;1206,T&R	80009	321-5030-00
A7R584	321-5004-00			RES,FXD:METAL FILM;22.1 OHM,1%,0.125W,TC=100 PPM;1206,T&R	80009	321-5004-00
A7R585	321-5030-00			RES,FXD:METAL FILM;10.0K OHM,1%,0.125W,TC=100 PPM;1206,T&R	80009	321-5030-00

Component No.	Tektronix Part No.	Serial/Assembly No. Effective	Dscont	Name & Description	Mfr. Code	Mfr. Part No.
A7R586	321-5030-00			RES,FXD:METAL FILM;10.0K OHM,1%,0.125W,TC=100 PPM;1206,T&R	80009	321-5030-00
A7R590	321-5026-00			RES,FXD:METAL FILM;4.75K OHM,1%,0.125W,TC=100 PPM;1206,T&R	80009	321-5026-00
A7R591	321-5018-00			RES,FXD:METAL FILM;1.0K OHM,1%,0.125W,TC=100 PPM;1206,T&R	80009	321-5018-00
A7R592	321-5018-00			RES,FXD:METAL FILM;1.0K OHM,1%,0.125W,TC=100 PPM;1206,T&R	80009	321-5018-00
A7R593	321-5038-00			RES,FXD:METAL FILM;47.5K OHM,1%,0.125W,TC=100 PPM;1206,T&R	80009	321-5038-00
A7R594	321-5010-00			RES,FXD:METAL FILM;221 OHM,1%,0.125W,TC=100 PPM;1206,T&R	80009	321-5010-00
A7R595	321-5030-00			RES,FXD:METAL FILM;10.0K OHM,1%,0.125W,TC=100 PPM;1206,T&R	80009	321-5030-00
A7R600	321-5014-00			RES,FXD:METAL FILM;475 OHM,1%,0.125W,TC=100 PPM;1206,T&R	80009	321-5014-00
A7R601	321-5026-00			RES,FXD:METAL FILM;4.75K OHM,1%,0.125W,TC=100 PPM;1206,T&R	80009	321-5026-00
A7R602	321-5011-00			RES,FXD:METAL FILM;274 OHM,1%,0.125W,TC=100 PPM;1206,T&R	80009	321-5011-00
A7R603	321-5030-00			RES,FXD:METAL FILM;10.0K OHM,1%,0.125W,TC=100 PPM;1206,T&R	80009	321-5030-00
A7R604	321-5030-00			RES,FXD:METAL FILM;10.0K OHM,1%,0.125W,TC=100 PPM;1206,T&R	80009	321-5030-00
A7R605	321-5004-00			RES,FXD:METAL FILM;22.1 OHM,1%,0.125W,TC=100 PPM;1206,T&R	80009	321-5004-00
A7R606	321-5043-00			RES,FXD:METAL FILM;47.5 OHM,1%,0.125W,TC=100 PPM;1206,T&R	80009	321-5043-00
A7R607	321-5026-00			RES,FXD:METAL FILM;4.75K OHM,1%,0.125W,TC=100 PPM;1206,T&R	80009	321-5026-00
A7R608	321-5026-00			RES,FXD:METAL FILM;4.75K OHM,1%,0.125W,TC=100 PPM;1206,T&R	80009	321-5026-00
A7R610	321-5043-00			RES,FXD:METAL FILM;47.5 OHM,1%,0.125W,TC=100 PPM;1206,T&R	80009	321-5043-00
A7R611	321-5011-00			RES,FXD:METAL FILM;274 OHM,1%,0.125W,TC=100 PPM;1206,T&R	80009	321-5011-00
A7R612	321-5017-00			RES,FXD:METAL FILM;825 OHM,1%,0.125W,TC=100 PPM;1206,T&R	80009	321-5017-00
A7R620	321-5018-00			RES,FXD:METAL FILM;1.0K OHM,1%,0.125W,TC=100 PPM;1206,T&R	80009	321-5018-00
A7R621	321-5009-00			RES,FXD:METAL FILM;182 OHM,1%,0.125W,TC=100 PPM;1206,T&R	80009	321-5009-00
A7R622	311-1244-00			RES,VAR,NONWW:TRMR,100 OHM,0.5W	80009	311-1244-00
A7R630	321-5044-00			RES,FXD:METAL FILM;56.2 OHM,1%,0.125W,TC=100 PPM;1206,T&R	01121	BCD56R2FT
A7R632	321-5018-00			RES,FXD:METAL FILM;1.0K OHM,1%,0.125W,TC=100 PPM;1206,T&R	80009	321-5018-00
A7R640	321-5018-00			RES,FXD:METAL FILM;1.0K OHM,1%,0.125W,TC=100 PPM;1206,T&R	80009	321-5018-00
A7R641	321-5004-00			RES,FXD:METAL FILM;22.1 OHM,1%,0.125W,TC=100 PPM;1206,T&R	80009	321-5004-00
A7R642	321-5014-00			RES,FXD:METAL FILM;475 OHM,1%,0.125W,TC=100 PPM;1206,T&R	80009	321-5014-00
A7R643	321-5014-00			RES,FXD:METAL FILM;475 OHM,1%,0.125W,TC=100 PPM;1206,T&R	80009	321-5014-00
A7R644	321-5045-00			RES,FXD:METAL FILM;68.1 OHM,1%,0.125W,TC=100 PPM;1206,T&R	80009	321-5045-00
A7R645	321-5014-00			RES,FXD:METAL FILM;475 OHM,1%,0.125W,TC=100 PPM;1206,T&R	80009	321-5014-00

Component No.	Tektronix Part No.	Serial/Assembly No. Effective	Dscont	Name & Description	Mfr. Code	Mfr. Part No.
A7R646	321-5044-00			RES,FXD:METAL FILM;56.2 OHM,1%,0.125W,TC=100 PPM;1206,T&R	01121	BCD56R2FT
A7R647	321-5009-00			RES,FXD:METAL FILM;182 OHM,1%,0.125W,TC=100 PPM;1206,T&R	80009	321-5009-00
A7R648	321-5043-00			RES,FXD:METAL FILM;47.5 OHM,1%,0.125W,TC=100 PPM;1206,T&R	80009	321-5043-00
A7R652	321-5011-00			RES,FXD:METAL FILM;274 OHM,1%,0.125W,TC=100 PPM;1206,T&R	80009	321-5011-00
A7R653	321-5011-00			RES,FXD:METAL FILM;274 OHM,1%,0.125W,TC=100 PPM;1206,T&R	80009	321-5011-00
A7R654	321-5012-00			RES,FXD:METAL FILM;332 OHM,1%,0.125W,TC=100 PPM;1206,T&R	80009	321-5012-00
A7R655	321-5044-00			RES,FXD:METAL FILM;56.2 OHM,1%,0.125W,TC=100 PPM;1206,T&R	01121	BCD56R2FT
A7R661	321-5000-00			RES,FXD:METAL FILM;10 OHM,1%,0.125W,TC=100 PPM;1206,T&R	57668	MCR18EZHFW10E
A7R662	321-5029-00			RES,FXD:METAL FILM;8.25K OHM,1%,0.125W,TC=100 PPM;1206,T&R	80009	321-5029-00
A7R663	321-5051-00			RES,FXD:METAL FILM;0 OHM,1%,0.125W,TC=100 PPM;1206,T&R	80009	321-5051-00
A7R670	321-5046-00			RES,FXD:METAL FILM;82.5 OHM,1%,0.125W,TC=100 PPM;1206,T&R	80009	321-5046-00
A7R671	321-5018-00			RES,FXD:METAL FILM;1.0K OHM,1%,0.125W,TC=100 PPM;1206,T&R	80009	321-5018-00
A7R672	321-5013-00			RES,FXD:METAL FILM;392 OHM,1%,0.125W,TC=100 PPM;1206,T&R	80009	321-5013-00
A7R673	321-5013-00			RES,FXD:METAL FILM;392 OHM,1%,0.125W,TC=100 PPM;1206,T&R	80009	321-5013-00
A7R690	321-5006-00			RES,FXD:METAL FILM;100 OHM,1%,0.125W,TC=100 PPM;1206,T&R	80009	321-5006-00
A7R710	321-5011-00			RES,FXD:METAL FILM;274 OHM,1%,0.125W,TC=100 PPM;1206,T&R	80009	321-5011-00
A7R720	321-5004-00			RES,FXD:METAL FILM;22.1 OHM,1%,0.125W,TC=100 PPM;1206,T&R	80009	321-5004-00
A7R721	321-5018-00			RES,FXD:METAL FILM;1.0K OHM,1%,0.125W,TC=100 PPM;1206,T&R	80009	321-5018-00
A7R722	321-5004-00			RES,FXD:METAL FILM;22.1 OHM,1%,0.125W,TC=100 PPM;1206,T&R	80009	321-5004-00
A7R730	321-5018-00			RES,FXD:METAL FILM;1.0K OHM,1%,0.125W,TC=100 PPM;1206,T&R	80009	321-5018-00
A7R740	321-5004-00			RES,FXD:METAL FILM;22.1 OHM,1%,0.125W,TC=100 PPM;1206,T&R	80009	321-5004-00
A7R741	321-5011-00			RES,FXD:METAL FILM;274 OHM,1%,0.125W,TC=100 PPM;1206,T&R	80009	321-5011-00
A7R742	321-5045-00			RES,FXD:METAL FILM;68.1 OHM,1%,0.125W,TC=100 PPM;1206,T&R	80009	321-5045-00
A7R750	321-5045-00			RES,FXD:METAL FILM;68.1 OHM,1%,0.125W,TC=100 PPM;1206,T&R	80009	321-5045-00
A7R751	321-5006-00			RES,FXD:METAL FILM;100 OHM,1%,0.125W,TC=100 PPM;1206,T&R	80009	321-5006-00
A7R752	321-5006-00			RES,FXD:METAL FILM;100 OHM,1%,0.125W,TC=100 PPM;1206,T&R	80009	321-5006-00
A7R753	321-5009-00			RES,FXD:METAL FILM;182 OHM,1%,0.125W,TC=100 PPM;1206,T&R	80009	321-5009-00
A7R754	321-5004-00			RES,FXD:METAL FILM;22.1 OHM,1%,0.125W,TC=100 PPM;1206,T&R	80009	321-5004-00
A7R755	321-5004-00			RES,FXD:METAL FILM;22.1 OHM,1%,0.125W,TC=100 PPM;1206,T&R	80009	321-5004-00

Component No.	Tektronix Part No.	Serial/Assembly No. Effective	Dscont	Name & Description	Mfr. Code	Mfr. Part No.
A7R756	321-5006-00	B010100	B010236	RES,FXD:METAL FILM;100 OHM,1%,0.125W,TC=100 PPM;1206,T&R	80009	321-5006-00
A7R760	321-5006-00			RES,FXD:METAL FILM;100 OHM,1%,0.125W,TC=100 PPM;1206,T&R	80009	321-5006-00
A7R761	321-5006-00			RES,FXD:METAL FILM;100 OHM,1%,0.125W,TC=100 PPM;1206,T&R	80009	321-5006-00
A7R762	321-5006-00			RES,FXD:METAL FILM;100 OHM,1%,0.125W,TC=100 PPM;1206,T&R	80009	321-5006-00
A7R763	321-5020-00			RES,FXD:METAL FILM;1.5K OHM,1%,0.125W,TC=10 0 PPM;1206,T&R	80009	321-5020-00
A7R764	321-5020-00			RES,FXD:METAL FILM;1.5K OHM,1%,0.125W,TC=10 0 PPM;1206,T&R	80009	321-5020-00
A7R765	321-5000-00			RES,FXD:METAL FILM;10 OHM,1%,0.125W,TC=100 PPM;1206,T&R	57668	MCR18EZHFW10E
A7R770	311-1936-00			RES,VAR,NONWW:TRMR,50 OHM,20%,0.5W	32997	3386X-1-500
A7R771	321-5030-00			RES,FXD:METAL FILM;10.0K OHM,1%,0.125W,TC=1 00 PPM;1206,T&R	80009	321-5030-00
A7R772	321-5017-00			RES,FXD:METAL FILM;825 OHM,1%,0.125W,TC=100 PPM;1206,T&R	80009	321-5017-00
A7R800	321-5043-00			RES,FXD:METAL FILM;47.5 OHM,1%,0.125W,TC=10 0 PPM;1206,T&R	80009	321-5043-00
A7R900	321-5043-00			RES,FXD:METAL FILM;47.5 OHM,1%,0.125W,TC=10 0 PPM;1206,T&R	80009	321-5043-00
A7R940	321-5050-00			RES,FXD:METAL FILM;33.2 OHM,1%,0.125W,TC=10 0 PPM;1206,T&R	57668	MCR18FWEA33E2
A7R941	321-5014-00			RES,FXD:METAL FILM;475 OHM,1%,0.125W,TC=100 PPM;1206,T&R	80009	321-5014-00
A7R950	321-5004-00			RES,FXD:METAL FILM;22.1 OHM,1%,0.125W,TC=10 0 PPM;1206,T&R	80009	321-5004-00
A7R951	321-5004-00			RES,FXD:METAL FILM;22.1 OHM,1%,0.125W,TC=10 0 PPM;1206,T&R	80009	321-5004-00
A7R960	321-5004-00			RES,FXD:METAL FILM;22.1 OHM,1%,0.125W,TC=10 0 PPM;1206,T&R	80009	321-5004-00
A7R961	321-5004-00			RES,FXD:METAL FILM;22.1 OHM,1%,0.125W,TC=10 0 PPM;1206,T&R	80009	321-5004-00
A7R962	321-5022-00			RES,FXD:METAL FILM;2.21K OHM,1%,0.125W,TC=1 00 PPM;1206,T&R	80009	321-5022-00
A7R963	321-5031-00			RES,FXD:METAL FILM;12.1K OHM,1%,0.125W,TC=1 00 PPM;1206,T&R	80009	321-5031-00
A7R964	321-5017-00			RES,FXD:METAL FILM;825 OHM,1%,0.125W,TC=100 PPM;1206,T&R	80009	321-5017-00
A7R965	321-5022-00			RES,FXD:METAL FILM;2.21K OHM,1%,0.125W,TC=1 00 PPM;1206,T&R	80009	321-5022-00
A7R970	321-5027-00			RES,FXD:METAL FILM;5.62K OHM,1%,0.125W,TC=1 00 PPM;1206,T&R	80009	321-5027-00
A7T180	120-1721-00			TRANSFORMER,RF:AUTO,6:6:6 RATIO	0JR03	120-1721-00
A7T660	120-1721-00			TRANSFORMER,RF:AUTO,6:6:6 RATIO	0JR03	120-1721-00
A7U100	156-5018-00			IC,LINEAR:BIPOLAR,OP-AMP;DUAL,SINGLE SUPPLY ;LM358D,SO8.150,TUBE	80009	156-5018-00
A7U170	151-5001-00			TRANSISTOR,SIG:BIPOLAR,NPN;40V,200MA,300MHZ ,AMPLIFIER;MMBT3904L,TO-236/SOT-23,8MM T&R	80009	151-5001-00
A7U200	156-5528-00			IC,MISC:HCTCMOS,ANALOG SWITCH;QUAD;74HCT431 6,SO16.150	80009	156-5528-00
A7U201	156-5018-00			IC,LINEAR:BIPOLAR,OP-AMP;DUAL,SINGLE SUPPLY ;LM358D,SO8.150,TUBE	80009	156-5018-00
A7U210	156-5082-01			IC,LINEAR:BIPOLAR,OP-AMP;LOW OFFSET;OP07CD, SO8.150,16MM T&R	80009	156-5082-01
A7U211	156-5018-00			IC,LINEAR:BIPOLAR,OP-AMP;DUAL,SINGLE SUPPLY ;LM358D,SO8.150,TUBE	80009	156-5018-00

Component No.	Tektronix Part No.	Serial/Assembly No. Effective	Dscont	Name & Description	Mfr. Code	Mfr. Part No.
A7U231	156-5021-01			IC,DIGITAL:CMOS,REGISTER;8-STAGE SHIFT/STORAGE, 3-STATE;4094,SO16.150,16MM T&R	80009	156-5021-01
A7U240	156-5021-01			IC,DIGITAL:CMOS,REGISTER;8-STAGE SHIFT/STORAGE, 3-STATE;4094,SO16.150,16MM T&R	80009	156-5021-01
A7U250	156-5467-00			IC,LINEAR:BIPOLAR,OP-AMP;1.0GHZ GBW;NE5539D,SO14.150	80009	156-5467-00
A7U280	156-6074-00			IC,LINEAR:	80009	156-6074-00
A7U300	156-5138-00			IC,LINEAR:BIFET,OP-AMP;DUAL;MC34002/TL072,SO8.150,TUBE	80009	156-5138-00
A7U320	156-5138-00			IC,LINEAR:BIFET,OP-AMP;DUAL;MC34002/TL072,SO8.150,TUBE	80009	156-5138-00
A7U321	156-6073-00			IC,LINEAR:BIPOLAR,OP-AMP;CURRENT FEEDBACK,200MHZ,1 TO 8 GAIN RANGE;CLC400AJE,SO8.150	80009	156-6073-00
A7U330	156-5021-01			IC,DIGITAL:CMOS,REGISTER;8-STAGE SHIFT/STORAGE, 3-STATE;4094,SO16.150,16MM T&R	80009	156-5021-01
A7U350	156-6141-00			IC,MISC:BIPOLAR,MULTIPLIER;FOUR QUADRANT,500MHZ;AD834JR,SO8.150,TUBE	80009	156-6141-00
A7U370	156-2884-00			IC,LINEAR:BIPOLAR,AMPLIFIER;4.0W AUDIO POWER AMPLIFIER W/DC VOLUME CONTROL;TDA1013B,SIP09	80009	156-2884-00
A7U390	156-5018-00			IC,LINEAR:BIPOLAR,OP-AMP;DUAL,SINGLE SUPPLY;LM358D,SO8.150,TUBE	80009	156-5018-00
A7U400	156-5528-00			IC,MISC:HCTCMOS,ANALOG SWITCH;QUAD;74HCT4316,SO16.150	80009	156-5528-00
A7U410	156-5097-00			IC,MISC:CMOS,ANALOG MUX;8 CHANNEL;CD4051,SO16.150	80009	156-5097-00
A7U420	156-5073-00			IC,MISC:HCMOS,ANALOG MUX;TRIPLE 2-CHANNEL;74HC4053,SO16.150,TUBE	80009	156-5073-00
A7U421	156-5120-00			IC,MISC:CMOS,ANALOG MUX;DUAL 4-CHANNEL;74HC4052,SO16.150	80009	156-5120-00
A7U440	156-6141-00			IC,MISC:BIPOLAR,MULTIPLIER;FOUR QUADRANT,500MHZ;AD834JR,SO8.150,TUBE	80009	156-6141-00
A7U450	156-5098-00	B010100	B010236	IC,DIGITAL:HCTCMOS,GATE;QUAD 2-INPUT NAND;74HCT00,SO14.150,TUBE	80009	156-5098-00
A7U460	156-5043-01	B010100	B010236	IC,CONVERTER:BIPOLAR,D/A;8 BIT,CURRENT OUT,MULTIPLYING;DAC08ED,SO16.150,16MM T&R	80009	156-5043-01
A7U480	156-5018-00			IC,LINEAR:BIPOLAR,OP-AMP;DUAL,SINGLE SUPPLY;LM358D,SO8.150,TUBE	80009	156-5018-00
A7U490	156-5714-00			IC,LINEAR:BIPOLAR,VOLTAGE REGULATOR;POSITIVE,ADJUSTABLE,100MA,4%;LM317LM,SO8.150,TUBE	27014	LM317LM
A7U510	156-5120-00			IC,MISC:CMOS,ANALOG MUX;DUAL 4-CHANNEL;74HC4052,SO16.150	80009	156-5120-00
A7U520	156-5352-00			IC,LINEAR:BIFET,OP-AMP;LOW OFFSET;LT1056C,SO8.150	80009	156-5352-00
A7U530	156-6073-00			IC,LINEAR:BIPOLAR,OP-AMP;CURRENT FEEDBACK,200MHZ,1 TO 8 GAIN RANGE;CLC400AJE,SO8.150	80009	156-6073-00
A7U550	156-5130-00			IC,DIGITAL:HCTCMOS,GATE;TRIPLE 3-INPUT NAND;74HCT10,SO14.150,TUBE	80009	156-5130-00
A7U560	156-5130-00			IC,DIGITAL:HCTCMOS,GATE;TRIPLE 3-INPUT NAND;74HCT10,SO14.150,TUBE	80009	156-5130-00
A7U580	156-5119-00			IC,LINEAR:BIPOLAR,COMPARATOR;DUAL,OPEN COLLECTOR,80NS;LM319D,SO14.150,TUBE	80009	156-5119-00
A7U590	156-5217-00			IC,LINEAR:BIPOLAR,VOLTAGE REGULATOR;NEGATIVE,ADJUSTABLE,100MA,4%;LM337LM,SO8.150	80009	156-5217-00
A7U600	156-6073-00			IC,LINEAR:BIPOLAR,OP-AMP;CURRENT FEEDBACK,200MHZ,1 TO 8 GAIN RANGE;CLC400AJE,SO8.150	80009	156-6073-00
A7U620	156-5073-00			IC,MISC:HCMOS,ANALOG MUX;TRIPLE 2-CHANNEL;74HC4053,SO16.150,TUBE	80009	156-5073-00

Component No.	Tektronix Part No.	Serial/Assembly No. Effective	Dscont	Name & Description	Mfr. Code	Mfr. Part No.
A7U630	156-5269-00			IC,DIGITAL:ECL,RECEIVER;TRIPLE LINE;10H116, PLCC20,TUBE	80009	156-5269-00
A7U650	156-6250-00			IC,MISC:CMOS,ANALOG MUX;8 CHANNEL,RF/VIDEO; MAX310CWN,SO18.300,TUBE	80009	156-6250-00
A7U651	156-6073-00			IC,LINEAR:BIPOLAR,OP-AMP;CURRENT FEEDBACK,2 00MHZ,1 TO 8 GAIN RANGE;CLC400AJE,SO8.150	80009	156-6073-00
A7U660	156-6090-00			IC,LINEAR:BIPOLAR,AMPLIFIER;LOGARITHMIC,DC COUPLED,350 MHZ;AD640JP,PLCC20,TUBE	80009	156-6090-00
A7U670	156-5119-00			IC,LINEAR:BIPOLAR,COMPARATOR;DUAL,OPEN COLL ECTOR,80NS;LM319D,SO14.150,TUBE	80009	156-5119-00
A7U710	156-6073-00			IC,LINEAR:BIPOLAR,OP-AMP;CURRENT FEEDBACK,2 00MHZ,1 TO 8 GAIN RANGE;CLC400AJE,SO8.150	80009	156-6073-00
A7U740	156-6090-00			IC,LINEAR:BIPOLAR,AMPLIFIER;LOGARITHMIC,DC COUPLED,350 MHZ;AD640JP,PLCC20,TUBE	80009	156-6090-00
A7U750	156-6073-00			IC,LINEAR:BIPOLAR,OP-AMP;CURRENT FEEDBACK,2 00MHZ,1 TO 8 GAIN RANGE;CLC400AJE,SO8.150	80009	156-6073-00
A7U760	156-6074-00			IC,LINEAR:	80009	156-6074-00
A7U990	156-0277-00			IC,LINEAR:BIPOLAR,VOLTAGE REGULATOR;POSITIV E,5.0V,1.0A,4%;MC7805CT,TO-220	80009	156-0277-00
A7U991	156-0846-00			IC,LINEAR:BIPOLAR,VOLTAGE REGULATOR;NEGATIV E,-5.0V,1.0A,4.0%;MC7905CT,TO-220	01295	UA7905CKC
A9	670-9468-01	B010100	B010161	CIRCUIT BD ASSY:DIGITAL STORAGE	80009	670-9468-01
A9	670-9468-02	B010162	B010213	CIRCUIT BD ASSY:DIGITAL STORAGE	80009	670-9468-02
A9	670-9468-03	B010214		CIRCUIT BD ASSY:DIGITAL STORAGE	80009	670-9468-03
A9BT510	146-0044-00			BATTERY,DRY:3V,0.17AH @ 0.85MA,BUTTON CELL, LITHIUM-MANGANESE DIOXIDE	00681	ORDER BY DESCR
A9C118	290-5000-00	B010100	B010161	CAP,FXD,ELCTLT:1UF,20%,50V	TK0900	S50V1MICROF
A9C118	290-5039-00	B010162		CAP,FXD,ALUM:10UF,20%,50V,6.3MM,SMD,16MM TA PE & REEL.	80009	290-5039-00
A9C170	283-5043-00			CAP,FXD,CER DI:820PF,5%,50V	95275	VJ1206A821J-XAAT
A9C171	283-5004-00			CAP,FXD,CER DI:0.1UF,10%,25V	80009	283-5004-00
A9C172	283-5025-00			CAP,FXD,CER DI:220PF,5%,50V	80009	283-5025-00
A9C173	283-5025-00			CAP,FXD,CER DI:220PF,5%,50V	80009	283-5025-00
A9C174	283-5050-00			CAP,FXD,CER DI:560PF,5%,50V	95275	VJ1206A561JXA
A9C180	283-5026-00			CAP,FXD,CER DI:390PF,5%,50V	54583	
A9C182	283-5026-00			CAP,FXD,CER DI:390PF,5%,50V	54583	
A9C183	283-5001-00			CAP,FXD,CER DI:100PF,5%,50V	80009	283-5001-00
A9C185	283-5001-00			CAP,FXD,CER DI:100PF,5%,50V	80009	283-5001-00
A9C254	290-0944-00			CAP,FXD,ELCTLT:220UF,+50-20%,10V	55680	UVX1C221MPA
A9C268	283-5004-00			CAP,FXD,CER DI:0.1UF,10%,25V	80009	283-5004-00
A9C272	283-5004-00			CAP,FXD,CER DI:0.1UF,10%,25V	80009	283-5004-00
A9C276	283-5001-00			CAP,FXD,CER DI:100PF,5%,50V	80009	283-5001-00
A9C280	283-5004-00			CAP,FXD,CER DI:0.1UF,10%,25V	80009	283-5004-00
A9C282	283-5004-00			CAP,FXD,CER DI:0.1UF,10%,25V	80009	283-5004-00
A9C284	283-5004-00			CAP,FXD,CER DI:0.1UF,10%,25V	80009	283-5004-00
A9C375	283-5004-00			CAP,FXD,CER DI:0.1UF,10%,25V	80009	283-5004-00
A9C376	283-5001-00			CAP,FXD,CER DI:100PF,5%,50V	80009	283-5001-00
A9C380	283-5001-00			CAP,FXD,CER DI:100PF,5%,50V	80009	283-5001-00
A9C381	283-5002-00			CAP,FXD,CER DI:1000PF,10%,50V	80009	283-5002-00
A9C382	283-5004-00			CAP,FXD,CER DI:0.1UF,10%,25V	80009	283-5004-00
A9C384	283-5004-00			CAP,FXD,CER DI:0.1UF,10%,25V	80009	283-5004-00
A9C386	283-5014-00			CAP,FXD,CER DI:330PF,5%,50V	80009	283-5014-00
A9C390	283-5001-00			CAP,FXD,CER DI:100PF,5%,50V	80009	283-5001-00
A9C395	283-5002-00			CAP,FXD,CER DI:1000PF,10%,50V	80009	283-5002-00
A9C396	283-5001-00			CAP,FXD,CER DI:100PF,5%,50V	80009	283-5001-00
A9C397	283-5004-00			CAP,FXD,CER DI:0.1UF,10%,25V	80009	283-5004-00
A9C398	283-5004-00			CAP,FXD,CER DI:0.1UF,10%,25V	80009	283-5004-00
A9C399	290-5000-00	B010100	B010161	CAP,FXD,ELCTLT:1UF,20%,50V	TK0900	S50V1MICROF

Component No.	Tektronix Part No.	Serial/Assembly No. Effective	Dscont	Name & Description	Mfr. Code	Mfr. Part No.
A9C399	290-5039-00	B010162		CAP,FXD,ALUM:10UF,20%,50V,6.3MM,SMD,16MM TA PE & REEL.	80009	290-5039-00
A9C412	290-0944-00			CAP,FXD,ELCTLT:220UF,+50-20%,10V	55680	UVX1C221MPA
A9C414	290-0944-00			CAP,FXD,ELCTLT:220UF,+50-20%,10V	55680	UVX1C221MPA
A9C465	290-5001-00	B010100	B010213	CAP,FXD,ELCTLT:10UF,20%,16V	TK0900	ALCHIP-S16V10UF
A9C465	290-5039-00	B010214		CAP,FXD,ALUM:10UF,20%,50V,6.3MM,SMD,16MM TA PE & REEL.	80009	290-5039-00
A9C470	290-0944-00			CAP,FXD,ELCTLT:220UF,+50-20%,10V	55680	UVX1C221MPA
A9C472	283-5004-00			CAP,FXD,CER DI:0.1UF,10%,25V	80009	283-5004-00
A9C474	283-5004-00			CAP,FXD,CER DI:0.1UF,10%,25V	80009	283-5004-00
A9C476	283-5001-00			CAP,FXD,CER DI:100PF,5%,50V	80009	283-5001-00
A9C480	283-5001-00			CAP,FXD,CER DI:100PF,5%,50V	80009	283-5001-00
A9C481	283-5011-00			CAP,FXD,CER DI:33PF,5%,50V	95275	VJ1206A330JXA
A9C482	283-5002-00			CAP,FXD,CER DI:1000PF,10%,50V	80009	283-5002-00
A9C486	290-5000-00	B010100	B010161	CAP,FXD,ELCTLT:1UF,20%,50V	TK0900	S50V1MICROF
A9C486	290-5039-00	B010162		CAP,FXD,ALUM:10UF,20%,50V,6.3MM,SMD,16MM TA PE & REEL.	80009	290-5039-00
A9C520	283-5004-00			CAP,FXD,CER DI:0.1UF,10%,25V	80009	283-5004-00
A9C571	283-5006-00			CAP,FXD,CER DI:5PF,+/- 0.25PF,50V	54583	C3216C0G1H050C
A9C574	283-5001-00			CAP,FXD,CER DI:100PF,5%,50V	80009	283-5001-00
A9C580	290-0944-00			CAP,FXD,ELCTLT:220UF,+50-20%,10V	55680	UVX1C221MPA
A9C642	283-5004-00			CAP,FXD,CER DI:0.1UF,10%,25V	80009	283-5004-00
A9C658	283-5004-00			CAP,FXD,CER DI:0.1UF,10%,25V	80009	283-5004-00
A9C664	283-5004-00			CAP,FXD,CER DI:0.1UF,10%,25V	80009	283-5004-00
A9C706	283-5004-00			CAP,FXD,CER DI:0.1UF,10%,25V	80009	283-5004-00
A9C722	283-5004-00			CAP,FXD,CER DI:0.1UF,10%,25V	80009	283-5004-00
A9C728	283-5004-00			CAP,FXD,CER DI:0.1UF,10%,25V	80009	283-5004-00
A9C738	283-5004-00			CAP,FXD,CER DI:0.1UF,10%,25V	80009	283-5004-00
A9C756	283-5004-00			CAP,FXD,CER DI:0.1UF,10%,25V	80009	283-5004-00
A9C816	283-5004-00			CAP,FXD,CER DI:0.1UF,10%,25V	80009	283-5004-00
A9C822	283-5004-00			CAP,FXD,CER DI:0.1UF,10%,25V	80009	283-5004-00
A9C858	283-5004-00			CAP,FXD,CER DI:0.1UF,10%,25V	80009	283-5004-00
A9C906	283-5004-00			CAP,FXD,CER DI:0.1UF,10%,25V	80009	283-5004-00
A9C946	283-5004-00			CAP,FXD,CER DI:0.1UF,10%,25V	80009	283-5004-00
A9C956	283-5004-00			CAP,FXD,CER DI:0.1UF,10%,25V	80009	283-5004-00
A9CR280	152-5004-00			DIODE,SIG:,ULTRA FAST;70V,0.15A,6NS,SER-PAI R;BAV99,SOT-23,8MM TR	25088	BAV99T
A9CR282	152-5004-00			DIODE,SIG:,ULTRA FAST;70V,0.15A,6NS,SER-PAI R;BAV99,SOT-23,8MM TR	25088	BAV99T
A9CR410	152-5000-00			SEMICOND DVC,DI:SW,SI,70V,COM CATHODE	80009	152-5000-00
A9CR438	152-5004-00			DIODE,SIG:,ULTRA FAST;70V,0.15A,6NS,SER-PAI R;BAV99,SOT-23,8MM TR	25088	BAV99T
A9CR536	152-5005-00			DIODE,SIG:,ULTRA FAST;70V,0.15A,6NS,COM-ANO DE;BAW56,SOT-23,8MM TR	80009	152-5005-00
A9J550	131-2221-00			CONN,HDR:PCB;,MALE,RTANG,2 X 25,0.1 CTR,0.3 18 MLG X 0.110 TAIL,30 GOLD;	22526	65626-150
A9L270	108-5058-00			COIL,RF:	54583	NL453232T-681K
A9L271	108-5057-00			COIL,RF:68UH +/-10%,Q 50, SRF 12 MHZ,DCR 6. 0 OHM, I MAX 130 MA12 MM TAPED & REELED, SM D	54583	NL453232T-680K
A9L283	108-5037-00			COIL,RF:INDUCTOR,;22UH,10%,50 @ 2.52MHZ,SRF =20MHZ,DCR=3.2 OHMS,IDC=180;SMD, 12MM T&R	54583	NL453232T-220K
A9L496	108-1262-00			COIL,RF:FXD,100UH,10%,Q=30,SRF 8.2MHZ,DCR 0 .23 OHM,I MAX 0.75ARADIAL LEAD	80009	108-1262-00
A9L498	108-1262-00			COIL,RF:FXD,100UH,10%,Q=30,SRF 8.2MHZ,DCR 0 .23 OHM,I MAX 0.75ARADIAL LEAD	80009	108-1262-00
A9P9	131-3556-00			CONN,RCPT,ELEC:CARD CONN,2 X 12,HORIZ	22526	66527-012
A9Q163	151-5001-00			TRANSISTOR,SIG:BIPOLAR,NPN;40V,200MA,300MHZ ,AMPLIFIER;MMBT3904L,TO-236/SOT-23,8MM T&R	80009	151-5001-00

Component No.	Tektronix Part No.	Serial/Assembly No. Effective	Dscont	Name & Description	Mfr. Code	Mfr. Part No.
A9Q164	151-5001-00			TRANSISTOR,SIG:BIPOLAR,NPN;40V,200MA,300MHZ ,AMPLIFIER;MMBT3904L,TO-236/SOT-23,8MM T&R	80009	151-5001-00
A9Q490	151-5005-00			TRANSISTOR,SIG:BIPOLAR,PNP;20V,1.0A,60MHZ,A MPLIFIER;BCX69/BC869,SOT-89,12MM T/R	04713	BCX69T1
A9Q492	151-5000-00			TRANSISTOR,SIG:BIPOLAR,PNP;40V,200MA,250MHZ ,AMPLIFIER;MMBT3906L,TO-236/SOT-23,8MM T&R	04713	MMBT3906LT1
A9Q532	151-5001-00			TRANSISTOR,SIG:BIPOLAR,NPN;40V,200MA,300MHZ ,AMPLIFIER;MMBT3904L,TO-236/SOT-23,8MM T&R	80009	151-5001-00
A9R161	321-5025-00			RES,FXD:METAL FILM;3.92K OHM,1%,0.125W,TC=1 00 PPM;1206,T&R	80009	321-5025-00
A9R162	321-5028-00			RES,FXD:METAL FILM;6.81K OHM,1%,0.125W,TC=1 00 PPM;1206,T&R	80009	321-5028-00
A9R166	321-5018-00			RES,FXD:METAL FILM;1.0K OHM,1%,0.125W,TC=10 0 PPM;1206,T&R	80009	321-5018-00
A9R170	321-5030-00			RES,FXD:METAL FILM;10.0K OHM,1%,0.125W,TC=1 00 PPM;1206,T&R	80009	321-5030-00
A9R172	321-5030-00			RES,FXD:METAL FILM;10.0K OHM,1%,0.125W,TC=1 00 PPM;1206,T&R	80009	321-5030-00
A9R173	321-5014-00			RES,FXD:METAL FILM;475 OHM,1%,0.125W,TC=100 PPM;1206,T&R	80009	321-5014-00
A9R174	321-5014-00			RES,FXD:METAL FILM;475 OHM,1%,0.125W,TC=100 PPM;1206,T&R	80009	321-5014-00
A9R176	321-5047-00			RES,FXD:METAL FILM;100K OHM,1%,0.125W,TC=10 0 PPM;1206,T&R	80009	321-5047-00
A9R177	321-5047-00			RES,FXD:METAL FILM;100K OHM,1%,0.125W,TC=10 0 PPM;1206,T&R	80009	321-5047-00
A9R180	311-1248-00			RES,VAR,NONWW:TRMR,500 OHM,0.5W	80009	311-1248-00
A9R181	321-5018-00			RES,FXD:METAL FILM;1.0K OHM,1%,0.125W,TC=10 0 PPM;1206,T&R	80009	321-5018-00
A9R182	321-5047-00			RES,FXD:METAL FILM;100K OHM,1%,0.125W,TC=10 0 PPM;1206,T&R	80009	321-5047-00
A9R183	321-5034-00			RES,FXD:METAL FILM;22.1K OHM,1%,0.125W,TC=1 00 PPM;1206,T&R	80009	321-5034-00
A9R184	311-1239-00			RES,VAR,TRMR:CERMET;2.5K OHM,10%,0.5W,0.375 SQ,SIDE ADJUST	80009	311-1239-00
A9R186	321-5014-00			RES,FXD:METAL FILM;475 OHM,1%,0.125W,TC=100 PPM;1206,T&R	80009	321-5014-00
A9R187	321-5014-00			RES,FXD:METAL FILM;475 OHM,1%,0.125W,TC=100 PPM;1206,T&R	80009	321-5014-00
A9R188	311-1248-00			RES,VAR,NONWW:TRMR,500 OHM,0.5W	80009	311-1248-00
A9R190	311-1237-00			RES,VAR,NONWW:1K OHM,10%,0.50W	80009	311-1237-00
A9R226	321-5018-00			RES,FXD:METAL FILM;1.0K OHM,1%,0.125W,TC=10 0 PPM;1206,T&R	80009	321-5018-00
A9R262	321-5018-00			RES,FXD:METAL FILM;1.0K OHM,1%,0.125W,TC=10 0 PPM;1206,T&R	80009	321-5018-00
A9R264	321-5018-00			RES,FXD:METAL FILM;1.0K OHM,1%,0.125W,TC=10 0 PPM;1206,T&R	80009	321-5018-00
A9R266	321-5018-00			RES,FXD:METAL FILM;1.0K OHM,1%,0.125W,TC=10 0 PPM;1206,T&R	80009	321-5018-00
A9R280	321-5006-00			RES,FXD:METAL FILM;100 OHM,1%,0.125W,TC=100 PPM;1206,T&R	80009	321-5006-00
A9R281	321-5020-00			RES,FXD:METAL FILM;1.5K OHM,1%,0.125W,TC=10 0 PPM;1206,T&R	80009	321-5020-00
A9R282	321-5020-00			RES,FXD:METAL FILM;1.5K OHM,1%,0.125W,TC=10 0 PPM;1206,T&R	80009	321-5020-00
A9R286	321-5032-00			RES,FXD:METAL FILM;15.0K OHM,1%,0.125W,TC=1 00 PPM;1206,T&R	80009	321-5032-00
A9R288	321-5043-00			RES,FXD:METAL FILM;47.5 OHM,1%,0.125W,TC=10 0 PPM;1206,T&R	80009	321-5043-00

Component No.	Tektronix Part No.	Serial/Assembly No. Effective	Dscont	Name & Description	Mfr. Code	Mfr. Part No.
A9R298	321-5047-00			RES,FXD:METAL FILM;100K OHM,1%,0.125W,TC=100 PPM;1206,T&R	80009	321-5047-00
A9R299	321-5018-00			RES,FXD:METAL FILM;1.0K OHM,1%,0.125W,TC=100 PPM;1206,T&R	80009	321-5018-00
A9R370	321-5018-00			RES,FXD:METAL FILM;1.0K OHM,1%,0.125W,TC=100 PPM;1206,T&R	80009	321-5018-00
A9R371	321-5030-00			RES,FXD:METAL FILM;10.0K OHM,1%,0.125W,TC=100 PPM;1206,T&R	80009	321-5030-00
A9R372	321-5018-00			RES,FXD:METAL FILM;1.0K OHM,1%,0.125W,TC=100 PPM;1206,T&R	80009	321-5018-00
A9R373	321-5015-00			RES,FXD:METAL FILM;562 OHM,1%,0.125W,TC=100 PPM;1206,T&R	80009	321-5015-00
A9R374	321-5018-00			RES,FXD:METAL FILM;1.0K OHM,1%,0.125W,TC=100 PPM;1206,T&R	80009	321-5018-00
A9R376	321-5000-00			RES,FXD:METAL FILM;10 OHM,1%,0.125W,TC=100 PPM;1206,T&R	57668	MCR18EZHFW10E
A9R377	321-5048-00			RES,FXD:METAL FILM;332K OHM,1%,0.125W,TC=100 PPM;1206,T&R	80009	321-5048-00
A9R378	321-5049-00			RES,FXD:METAL FILM;1M OHM,1%,0.125W,TC=100 PPM;1206,T&R	80009	321-5049-00
A9R379	321-5019-00			RES,FXD:METAL FILM;1.21K OHM,1%,0.125W,TC=100 PPM;1206,T&R	80009	321-5019-00
A9R380	321-5006-00			RES,FXD:METAL FILM;100 OHM,1%,0.125W,TC=100 PPM;1206,T&R	80009	321-5006-00
A9R381	321-5018-00			RES,FXD:METAL FILM;1.0K OHM,1%,0.125W,TC=100 PPM;1206,T&R	80009	321-5018-00
A9R382	321-5048-00			RES,FXD:METAL FILM;332K OHM,1%,0.125W,TC=100 PPM;1206,T&R	80009	321-5048-00
A9R383	321-5049-00			RES,FXD:METAL FILM;1M OHM,1%,0.125W,TC=100 PPM;1206,T&R	80009	321-5049-00
A9R384	321-5019-00			RES,FXD:METAL FILM;1.21K OHM,1%,0.125W,TC=100 PPM;1206,T&R	80009	321-5019-00
A9R385	321-5035-00			RES,FXD:METAL FILM;27.4K OHM,1%,0.125W,TC=100 PPM;1206,T&R	80009	321-5035-00
A9R386	321-5030-00			RES,FXD:METAL FILM;10.0K OHM,1%,0.125W,TC=100 PPM;1206,T&R	80009	321-5030-00
A9R387	321-5026-00			RES,FXD:METAL FILM;4.75K OHM,1%,0.125W,TC=100 PPM;1206,T&R	80009	321-5026-00
A9R388	321-5030-00			RES,FXD:METAL FILM;10.0K OHM,1%,0.125W,TC=100 PPM;1206,T&R	80009	321-5030-00
A9R389	321-5026-00			RES,FXD:METAL FILM;4.75K OHM,1%,0.125W,TC=100 PPM;1206,T&R	80009	321-5026-00
A9R390	321-5026-00			RES,FXD:METAL FILM;4.75K OHM,1%,0.125W,TC=100 PPM;1206,T&R	80009	321-5026-00
A9R391	321-5047-00			RES,FXD:METAL FILM;100K OHM,1%,0.125W,TC=100 PPM;1206,T&R	80009	321-5047-00
A9R392	321-5018-00			RES,FXD:METAL FILM;1.0K OHM,1%,0.125W,TC=100 PPM;1206,T&R	80009	321-5018-00
A9R393	321-5043-00			RES,FXD:METAL FILM;47.5 OHM,1%,0.125W,TC=100 PPM;1206,T&R	80009	321-5043-00
A9R394	321-5030-00			RES,FXD:METAL FILM;10.0K OHM,1%,0.125W,TC=100 PPM;1206,T&R	80009	321-5030-00
A9R430	321-5028-00			RES,FXD:METAL FILM;6.81K OHM,1%,0.125W,TC=100 PPM;1206,T&R	80009	321-5028-00
A9R436	321-5028-00			RES,FXD:METAL FILM;6.81K OHM,1%,0.125W,TC=100 PPM;1206,T&R	80009	321-5028-00
A9R470	321-5000-00			RES,FXD:METAL FILM;10 OHM,1%,0.125W,TC=100 PPM;1206,T&R	57668	MCR18EZHFW10E

Component No.	Tektronix Part No.	Serial/Assembly No. Effective	Dscont	Name & Description	Mfr. Code	Mfr. Part No.
A9R476	321-5023-00			RES,FXD:METAL FILM;2.74K OHM,1%,0.125W,TC=100 PPM;1206,T&R	80009	321-5023-00
A9R478	321-5023-00			RES,FXD:METAL FILM;2.74K OHM,1%,0.125W,TC=100 PPM;1206,T&R	80009	321-5023-00
A9R483	321-5018-00			RES,FXD:METAL FILM;1.0K OHM,1%,0.125W,TC=100 PPM;1206,T&R	80009	321-5018-00
A9R484	321-5040-00			RES,FXD:METAL FILM;68.1K OHM,1%,0.125W,TC=100 PPM;1206,T&R	80009	321-5040-00
A9R485	321-5030-00			RES,FXD:METAL FILM;10.0K OHM,1%,0.125W,TC=100 PPM;1206,T&R	80009	321-5030-00
A9R486	321-5030-00			RES,FXD:METAL FILM;10.0K OHM,1%,0.125W,TC=100 PPM;1206,T&R	80009	321-5030-00
A9R494	321-5030-00			RES,FXD:METAL FILM;10.0K OHM,1%,0.125W,TC=100 PPM;1206,T&R	80009	321-5030-00
A9R496	321-5025-00			RES,FXD:METAL FILM;3.92K OHM,1%,0.125W,TC=100 PPM;1206,T&R	80009	321-5025-00
A9R532	321-5030-00			RES,FXD:METAL FILM;10.0K OHM,1%,0.125W,TC=100 PPM;1206,T&R	80009	321-5030-00
A9R534	321-5030-00			RES,FXD:METAL FILM;10.0K OHM,1%,0.125W,TC=100 PPM;1206,T&R	80009	321-5030-00
A9R538	321-5018-00			RES,FXD:METAL FILM;1.0K OHM,1%,0.125W,TC=100 PPM;1206,T&R	80009	321-5018-00
A9R562	321-5030-00			RES,FXD:METAL FILM;10.0K OHM,1%,0.125W,TC=100 PPM;1206,T&R	80009	321-5030-00
A9R570	321-5020-00			RES,FXD:METAL FILM;1.5K OHM,1%,0.125W,TC=100 PPM;1206,T&R	80009	321-5020-00
A9R574	321-5023-00			RES,FXD:METAL FILM;2.74K OHM,1%,0.125W,TC=100 PPM;1206,T&R	80009	321-5023-00
A9R576	321-5023-00			RES,FXD:METAL FILM;2.74K OHM,1%,0.125W,TC=100 PPM;1206,T&R	80009	321-5023-00
A9R578	321-5023-00			RES,FXD:METAL FILM;2.74K OHM,1%,0.125W,TC=100 PPM;1206,T&R	80009	321-5023-00
A9R978	311-1248-00			RES,VAR,NONWW:TRMR,500 OHM,0.5W	80009	311-1248-00
A9R982	311-1245-00			RES,VAR,NONWW:TRMR,10K OHM,0.5W	80009	311-1245-00
A9R986	311-1236-00			RES,VAR,NONWW:TRMR,250 OHM,0.5W	80009	311-1236-00
A9R992	311-1245-00			RES,VAR,NONWW:TRMR,10K OHM,0.5W	80009	311-1245-00
A9U104	156-5130-00			IC,DIGITAL:HCTCMOS,GATE;TRIPLE 3-INPUT NAND;74HCT10,SO14.150,TUBE	80009	156-5130-00
A9U108	156-5148-00			IC,DIGITAL:HCTCMOS,MUX;QUAD 2-TO-1 DATA SELECTOR, 3-STATE;74HCT257,SO16.150,TUBE	80009	156-5148-00
A9U114	156-5237-00			IC,DIGITAL:LSTTL,COMPARATOR;8-BIT MAGNITUDE;74LS682,SO20.300,TUBE	80009	156-5237-00
A9U120	156-5236-00			IC,DIGITAL:	80009	156-5236-00
A9U130	156-1170-00			MICROCKT,DGTL:TTL,ROM,CHAR GEN	27014	DM86S64CAB/N
A9U131	156-3217-00			IC,MISC:	80009	156-3217-00
A9U132	156-5203-00			MICROCKT,DGTL:LSTTL,4 BIT FULL ADDER	80009	156-5203-00
A9U140	156-5134-00			IC,DIGITAL:HCTCMOS,COUNTER;SYNCH 4-BIT BINARY;74HCT161,SO16.150,TUBE	80009	156-5134-00
A9U146	160-5006-00			MICROCKT,DGTL:STTL,PLD,FPLS,PRGM	80009	160-5006-00
A9U154	156-5198-00			IC,DIGITAL:HCTCMOS,GATE;QUAD 2-INPUT XOR;74HCT86,SO14.150	80009	156-5198-00
A9U160	156-5289-00			IC,DIGITAL:HCTCMOS,FLIP FLOP;OCTAL D-TYPE, 3-STATE;74HCT574,SO20.300,TUBE	80009	156-5289-00
A9U204	156-5172-00			IC,DIGITAL:LSTTL,GATE;TRIPLE 3-INPUT NOR;74LS27,SO14.150,TUBE	04713	SN74LS27
A9U206	156-5148-00			IC,DIGITAL:HCTCMOS,MUX;QUAD 2-TO-1 DATA SELECTOR, 3-STATE;74HCT257,SO16.150,TUBE	80009	156-5148-00
A9U208	160-5013-01			MICROCKT,DGTL:STTL,PLD,FPLS,PRGM	80009	160-5013-01

Component No.	Tektronix Part No.	Serial/Assembly No. Effective	Dscont	Name & Description	Mfr. Code	Mfr. Part No.
A9U214	156-5289-00			IC,DIGITAL:HCTCMOS,FLIP FLOP;OCTAL D-TYPE, 3-STATE;74HCT574,SO20.300,TUBE	80009	156-5289-00
A9U219	156-5289-00			IC,DIGITAL:HCTCMOS,FLIP FLOP;OCTAL D-TYPE, 3-STATE;74HCT574,SO20.300,TUBE	80009	156-5289-00
A9U220	156-5148-00			IC,DIGITAL:HCTCMOS,MUX;QUAD 2-TO-1 DATA SEL ECTOR, 3-STATE;74HCT257,SO16.150,TUBE	80009	156-5148-00
A9U224	156-5074-00			IC,DIGITAL:HCMOS,FLIP FLOP;DUAL D-TYPE;74HC 74,SO14.150,TUBE	80009	156-5074-00
A9U226	156-5148-00			IC,DIGITAL:HCTCMOS,MUX;QUAD 2-TO-1 DATA SEL ECTOR, 3-STATE;74HCT257,SO16.150,TUBE	80009	156-5148-00
A9U228	156-5198-00			IC,DIGITAL:HCTCMOS,GATE;QUAD 2-INPUT XOR;74 HCT86,SO14.150	80009	156-5198-00
A9U232	156-5203-00			MICROCKT,DGTL:LSTTL,4 BIT FULL ADDER	80009	156-5203-00
A9U234	160-5011-00			MICROCKT,DGTL:STTL,PLD,FPLA,PRGM	80009	160-5011-00
A9U236	156-5285-00			IC,DIGITAL:FTTL,COUNTER;SYNCH 4-BIT UP/DOWN BINARY, WITH SEPARATE CP;74F193,SO16.150,T UBE	80009	156-5285-00
A9U240	156-5134-00			IC,DIGITAL:HCTCMOS,COUNTER;SYNCH 4-BIT BINA RY;74HCT161,SO16.150,TUBE	80009	156-5134-00
A9U242	156-5285-00			IC,DIGITAL:FTTL,COUNTER;SYNCH 4-BIT UP/DOWN BINARY, WITH SEPARATE CP;74F193,SO16.150,T UBE	80009	156-5285-00
A9U244	156-5112-00			IC,DIGITAL:LSTTL,FLIP FLOP;DUAL J-K, PRESET , CLEAR;74LS109,SO16.150,TUBE	80009	156-5112-00
A9U246	156-5285-00			IC,DIGITAL:FTTL,COUNTER;SYNCH 4-BIT UP/DOWN BINARY, WITH SEPARATE CP;74F193,SO16.150,T UBE	80009	156-5285-00
A9U254	156-5238-00			IC,DIGITAL:HCMOS,GATE;8-INPUT OR/NOR;74HC40 78,SO14.150,TUBE	80009	156-5238-00
A9U256	160-5004-00			MICROCKT,DGTL:STTL,PLD,FPLS,PRGM	80009	160-5004-00
A9U260	160-5007-00			MICROCKT,DGTL:STTL,PLD,FPLS,PRGM	80009	160-5007-00
A9U270	156-5203-00			MICROCKT,DGTL:LSTTL,4 BIT FULL ADDER	80009	156-5203-00
A9U274	156-5081-01			IC,DIGITAL:HCTMOS,GATE;HEX INVERTER;74HCT04 ,SO14.150,16MM T&R	80009	156-5081-01
A9U280	156-5043-01			IC,CONVERTER:BIPOLAR,D/A;8 BIT,CURRENT OUT, MULTIPLYING;DAC08ED,SO16.150,16MM T&R	80009	156-5043-01
A9U284	156-5095-01			IC,LINEAR:BIPOLAR,OP-AMP;LOW NOISE,HIGH OUT PUT DRIVE;NE5534D,SO8.150,12MM T&R	80009	156-5095-01
A9U292	156-5119-00			IC,LINEAR:BIPOLAR,COMPARATOR;DUAL,OPEN COLL ECTOR,80NS;LM319D,SO14.150,TUBE	80009	156-5119-00
A9U304	156-5237-00			IC,DIGITAL:LSTTL,COMPARATOR;8-BIT MAGNITUDE ;74LS682,SO20.300,TUBE	80009	156-5237-00
A9U308	160-5005-00			MICROCKT,DGTL:STTL,PLD,FPLS,PRGM	80009	160-5005-00
A9U318	160-5012-00			MICROCKT,DGTL:STTL,PLD,FPLS,PRGM	80009	160-5012-00
A9U324	156-5081-01			IC,DIGITAL:HCTMOS,GATE;HEX INVERTER;74HCT04 ,SO14.150,16MM T&R	80009	156-5081-01
A9U326	156-5103-00			IC,DIGITAL:HCMOS,COUNTER;DUAL 4-BIT BINARY RIPPLE;74HC393,SO14.150,TUBE	80009	156-5103-00
A9U334	156-5103-00			IC,DIGITAL:HCMOS,COUNTER;DUAL 4-BIT BINARY RIPPLE;74HC393,SO14.150,TUBE	80009	156-5103-00
A9U336	156-5220-01			IC,DIGITAL:HCTCMOS,BUFFER;OCTAL BUFFER/DRIV ER, 3-STATE;74HCT541,SO20.300,24MM T&R	80009	156-5220-01
A9U342	156-5220-01			IC,DIGITAL:HCTCMOS,BUFFER;OCTAL BUFFER/DRIV ER, 3-STATE;74HCT541,SO20.300,24MM T&R	80009	156-5220-01
A9U352	160-5008-00			MICROCKT,DGTL:STTL,PLD,FPLA,PRGM	80009	160-5008-00
A9U360	160-5002-00			MICROCKT,DGTL:STTL,PLD,FPLS,PRGM	80009	160-5002-00
A9U368	156-2800-00			IC,CONVERTER:BIPOLAR,A/D;8-BIT,25MSPS,FLASH ,1W;MC10319,DIP24.6	80009	156-2800-00

Component No.	Tektronix Part No.	Serial/Assembly No. Effective	Dscont	Name & Description	Mfr. Code	Mfr. Part No.
A9U376	156-5095-01			IC,LINEAR:BIPOLAR,OP-AMP;LOW NOISE,HIGH OUT PUT DRIVE;NE5534D,SO8.150,12MM T&R	80009	156-5095-01
A9U392	156-5095-01			IC,LINEAR:BIPOLAR,OP-AMP;LOW NOISE,HIGH OUT PUT DRIVE;NE5534D,SO8.150,12MM T&R	80009	156-5095-01
A9U408	156-5172-00			IC,DIGITAL:LSTTL,GATE;TRIPLE 3-INPUT NOR;74 LS27,SO14.150,TUBE	04713	SN74LS27
A9U420	156-5220-01			IC,DIGITAL:HCTCMOS,BUFFER;OCTAL BUFFER/DRIV ER, 3-STATE;74HCT541,SO20.300,24MM T&R	80009	156-5220-01
A9U428	156-5235-00			IC,DIGITAL:	80009	156-5235-00
A9U436	156-5286-00			IC,MEMORY:CMOS,SRAM;32K X 8,120NS,50UA,OE;4 3256,SO28M.330,TUBE	80009	156-5286-00
A9U438	156-5142-00			IC,DIGITAL:HCTCMOS,DEMUX/DECODER;DUAL 2-TO- 4 DECODER;74HCT139,SO16.150,TUBE	80009	156-5142-00
A9U446	156-5220-01			IC,DIGITAL:HCTCMOS,BUFFER;OCTAL BUFFER/DRIV ER, 3-STATE;74HCT541,SO20.300,24MM T&R	80009	156-5220-01
A9U448	156-5220-01			IC,DIGITAL:HCTCMOS,BUFFER;OCTAL BUFFER/DRIV ER, 3-STATE;74HCT541,SO20.300,24MM T&R	80009	156-5220-01
A9U452	156-5220-01			IC,DIGITAL:HCTCMOS,BUFFER;OCTAL BUFFER/DRIV ER, 3-STATE;74HCT541,SO20.300,24MM T&R	80009	156-5220-01
A9U454	156-5220-01			IC,DIGITAL:HCTCMOS,BUFFER;OCTAL BUFFER/DRIV ER, 3-STATE;74HCT541,SO20.300,24MM T&R	80009	156-5220-01
A9U460	156-5289-00			IC,DIGITAL:HCTCMOS,FLIP FLOP;OCTAL D-TYPE, 3-STATE;74HCT574,SO20.300,TUBE	80009	156-5289-00
A9U462	156-5016-00			IC,DIGITAL:LSTTL,BUS TRANSCEIVER;OCTAL, NON INV, 3-STATE;74LS245,SO20.300,TUBE	80009	156-5016-00
A9U464	160-5003-00			MICROCKT,DGTL:STTL,PLD,FPLS,PRGM	80009	160-5003-00
A9U474	156-5043-01			IC,CONVERTER:BIPOLAR,D/A;8 BIT,CURRENT OUT, MULTIPLYING;DAC08ED,SO16.150,16MM T&R	80009	156-5043-01
A9U476	156-5095-01			IC,LINEAR:BIPOLAR,OP-AMP;LOW NOISE,HIGH OUT PUT DRIVE;NE5534D,SO8.150,12MM T&R	80009	156-5095-01
A9U484	156-5274-01			IC,MISC:CMOS,ANALOG SWITCH;QUAD;DG211,SO16. 150,16MM T&R	80009	156-5274-01
A9U486	156-5018-00			IC,LINEAR:BIPOLAR,OP-AMP;DUAL,SINGLE SUPPLY ;LM358D,SO8.150,TUBE	80009	156-5018-00
A9U488	156-5088-00			IC,DIGITAL:HCTCMOS,DEMUX/DECODER;3-TO-8 DEC ODER;74HCT138,SO16.150,TUBE	80009	156-5088-00
A9U494	156-0991-00			IC,LINEAR:BIPOLAR,VOLTAGE REGULATOR;POSITIV E,5.0V,100MA,5%;MC78L05ACP,TO-92	80009	156-0991-00
A9U506	156-5134-00			IC,DIGITAL:HCTCMOS,COUNTER;SYNCH 4-BIT BINA RY;74HCT161,SO16.150,TUBE	80009	156-5134-00
A9U520	156-5237-00			IC,DIGITAL:LSTTL,COMPARATOR;8-BIT MAGNITUDE ;74LS682,SO20.300,TUBE	80009	156-5237-00
A9U524	156-5235-00			IC,DIGITAL:	80009	156-5235-00
A9U526	156-5220-01			IC,DIGITAL:HCTCMOS,BUFFER;OCTAL BUFFER/DRIV ER, 3-STATE;74HCT541,SO20.300,24MM T&R	80009	156-5220-01
A9U566	156-5171-00			IC,DIGITAL:LSTTL,GATE;TRIPLE 3-INPUT AND;74 LS11,SO14.150,TUBE	04713	SN74LS11D
A9U574	156-5043-01			IC,CONVERTER:BIPOLAR,D/A;8 BIT,CURRENT OUT, MULTIPLYING;DAC08ED,SO16.150,16MM T&R	80009	156-5043-01
A10	671-0653-14			CIRCUIT BD ASSY:MICROPROCESSOR	80009	671-0653-14
A10C110	283-5004-00			CAP,FXD,CER DI:0.1UF,10%,25V	80009	283-5004-00
A10C128	283-5004-00			CAP,FXD,CER DI:0.1UF,10%,25V	80009	283-5004-00
A10C174	283-5004-00			CAP,FXD,CER DI:0.1UF,10%,25V	80009	283-5004-00
A10C175	283-5004-00			CAP,FXD,CER DI:0.1UF,10%,25V	80009	283-5004-00
A10C183	283-5004-00			CAP,FXD,CER DI:0.1UF,10%,25V	80009	283-5004-00
A10C184	283-5004-00			CAP,FXD,CER DI:0.1UF,10%,25V	80009	283-5004-00
A10C210	283-5004-00			CAP,FXD,CER DI:0.1UF,10%,25V	80009	283-5004-00
A10C228	283-5003-00			CAP,FXD,CER DI:0.01UF,10%,50V	80009	283-5003-00
A10C261	283-5001-00			CAP,FXD,CER DI:100PF,5%,50V	80009	283-5001-00

Component No.	Tektronix Part No.	Serial/Assembly No. Effective	Dscont	Name & Description	Mfr. Code	Mfr. Part No.
A10C275	283-5003-00			CAP,FXD,CER DI:0.01UF,10%,50V	80009	283-5003-00
A10C280	283-5003-00			CAP,FXD,CER DI:0.01UF,10%,50V	80009	283-5003-00
A10C295	283-5004-00			CAP,FXD,CER DI:0.1UF,10%,25V	80009	283-5004-00
A10C310	283-5004-00			CAP,FXD,CER DI:0.1UF,10%,25V	80009	283-5004-00
A10C328	283-5004-00			CAP,FXD,CER DI:0.1UF,10%,25V	80009	283-5004-00
A10C361	283-5011-00			CAP,FXD,CER DI:33PF,5%,50V	95275	VJ1206A330JXA
A10C362	283-5011-00			CAP,FXD,CER DI:33PF,5%,50V	95275	VJ1206A330JXA
A10C365	283-5004-00			CAP,FXD,CER DI:0.1UF,10%,25V	80009	283-5004-00
A10C370	283-5004-00			CAP,FXD,CER DI:0.1UF,10%,25V	80009	283-5004-00
A10C380	283-5003-00			CAP,FXD,CER DI:0.01UF,10%,50V	80009	283-5003-00
A10C385	283-5004-00			CAP,FXD,CER DI:0.1UF,10%,25V	80009	283-5004-00
A10C395	283-5003-00			CAP,FXD,CER DI:0.01UF,10%,50V	80009	283-5003-00
A10C410	283-5004-00			CAP,FXD,CER DI:0.1UF,10%,25V	80009	283-5004-00
A10C428	283-5003-00			CAP,FXD,CER DI:0.01UF,10%,50V	80009	283-5003-00
A10C450	283-5003-00			CAP,FXD,CER DI:0.01UF,10%,50V	80009	283-5003-00
A10C460	283-5004-00			CAP,FXD,CER DI:0.1UF,10%,25V	80009	283-5004-00
A10C465	283-5003-00			CAP,FXD,CER DI:0.01UF,10%,50V	80009	283-5003-00
A10C470	283-5004-00			CAP,FXD,CER DI:0.1UF,10%,25V	80009	283-5004-00
A10C480	283-5003-00			CAP,FXD,CER DI:0.01UF,10%,50V	80009	283-5003-00
A10C485	283-5004-00			CAP,FXD,CER DI:0.1UF,10%,25V	80009	283-5004-00
A10C510	283-5003-00			CAP,FXD,CER DI:0.01UF,10%,50V	80009	283-5003-00
A10C527	283-5001-00			CAP,FXD,CER DI:100PF,5%,50V	80009	283-5001-00
A10C528	283-5003-00			CAP,FXD,CER DI:0.01UF,10%,50V	80009	283-5003-00
A10C529	283-5004-00			CAP,FXD,CER DI:0.1UF,10%,25V	80009	283-5004-00
A10C540	283-5004-00			CAP,FXD,CER DI:0.1UF,10%,25V	80009	283-5004-00
A10C550	283-5004-00			CAP,FXD,CER DI:0.1UF,10%,25V	80009	283-5004-00
A10C565	283-5004-00			CAP,FXD,CER DI:0.1UF,10%,25V	80009	283-5004-00
A10C570	283-5003-00			CAP,FXD,CER DI:0.01UF,10%,50V	80009	283-5003-00
A10C580	283-5004-00			CAP,FXD,CER DI:0.1UF,10%,25V	80009	283-5004-00
A10C595	283-5003-00			CAP,FXD,CER DI:0.01UF,10%,50V	80009	283-5003-00
A10C715	290-0944-00			CAP,FXD,ELCTLT:220UF,+50-20%,10V	55680	UVX1C221MPA
A10C760	283-5004-00			CAP,FXD,CER DI:0.1UF,10%,25V	80009	283-5004-00
A10C830	290-0944-00			CAP,FXD,ELCTLT:220UF,+50-20%,10V	55680	UVX1C221MPA
A10C880	283-5004-00			CAP,FXD,CER DI:0.1UF,10%,25V	80009	283-5004-00
A10C885	290-0944-00			CAP,FXD,ELCTLT:220UF,+50-20%,10V	55680	UVX1C221MPA
A10C890	283-5003-00			CAP,FXD,CER DI:0.01UF,10%,50V	80009	283-5003-00
A10C895	283-5004-00			CAP,FXD,CER DI:0.1UF,10%,25V	80009	283-5004-00
A10C960	290-0944-00			CAP,FXD,ELCTLT:220UF,+50-20%,10V	55680	UVX1C221MPA
A10C961	283-5004-00			CAP,FXD,CER DI:0.1UF,10%,25V	80009	283-5004-00
A10C975	290-0944-00			CAP,FXD,ELCTLT:220UF,+50-20%,10V	55680	UVX1C221MPA
A10C978	283-5003-00			CAP,FXD,CER DI:0.01UF,10%,50V	80009	283-5003-00
A10C982	283-5004-00			CAP,FXD,CER DI:0.1UF,10%,25V	80009	283-5004-00
A10C987	283-5004-00			CAP,FXD,CER DI:0.1UF,10%,25V	80009	283-5004-00
A10C990	283-5004-00			CAP,FXD,CER DI:0.1UF,10%,25V	80009	283-5004-00
A10C995	283-5001-00			CAP,FXD,CER DI:100PF,5%,50V	80009	283-5001-00
A10J180	131-0391-01			CONN,RF JACK:	80009	131-0391-01
A10J185	131-0391-01			CONN,RF JACK:	80009	131-0391-01
A10J190	131-0391-01			CONN,RF JACK:	80009	131-0391-01
A10J195	131-0391-01			CONN,RF JACK:	80009	131-0391-01
A10J528	131-1857-00			CONN,HDR:PCB,;MALE,STR,1 X 36,0.1 CTR,0.230 MLG X 0.100 TAIL,GOLD;,,	58050	082-3644-SS10
A10J550	131-2221-00			CONN,HDR:PCB;,MALE,RTANG,2 X 25,0.1 CTR,0.318 MLG X 0.110 TAIL,30 GOLD;,,	22526	65626-150
A10L350	108-5023-00			COIL,RF:FXD,5.6UH,20%,Q=50, SRF 40 MHZ, DCR 1.1 OHM, I MAX	54583	NL453232T-5R6M
A10P10	131-3556-00			CONN,RCPT,ELEC:CARD CONN,2 X 12,HORIZ	22526	66527-012
A10Q175	151-5001-00			TRANSISTOR,SIG:BIPOLAR,NPN;40V,200MA,300MHZ ,AMPLIFIER;MMBT3904L,TO-236/SOT-23,8MM T&R	80009	151-5001-00

Component No.	Tektronix Part No.	Serial/Assembly No. Effective	Dscont	Name & Description	Mfr. Code	Mfr. Part No.
A10Q194	151-5016-00			TRANSISTOR,SIG:BIPOLAR,PNP;20V,30MA,600MHZ, AMPLIFIER;MMBTH81L,TO-236/SOT-23,8MM T&R	80009	151-5016-00
A10Q195	151-5016-00			TRANSISTOR,SIG:BIPOLAR,PNP;20V,30MA,600MHZ, AMPLIFIER;MMBTH81L,TO-236/SOT-23,8MM T&R	80009	151-5016-00
A10Q196	151-5001-00			TRANSISTOR,SIG:BIPOLAR,NPN;40V,200MA,300MHZ ,AMPLIFIER;MMBT3904L,TO-236/SOT-23,8MM T&R	80009	151-5001-00
A10Q197	151-5000-00			TRANSISTOR,SIG:BIPOLAR,PNP;40V,200MA,250MHZ ,AMPLIFIER;MMBT3906L,TO-236/SOT-23,8MM T&R	04713	MMBT3906LT1
A10Q522	151-5001-00			TRANSISTOR,SIG:BIPOLAR,NPN;40V,200MA,300MHZ ,AMPLIFIER;MMBT3904L,TO-236/SOT-23,8MM T&R	80009	151-5001-00
A10Q970	151-5000-00			TRANSISTOR,SIG:BIPOLAR,PNP;40V,200MA,250MHZ ,AMPLIFIER;MMBT3906L,TO-236/SOT-23,8MM T&R	04713	MMBT3906LT1
A10Q973	151-5000-00			TRANSISTOR,SIG:BIPOLAR,PNP;40V,200MA,250MHZ ,AMPLIFIER;MMBT3906L,TO-236/SOT-23,8MM T&R	04713	MMBT3906LT1
A10Q975	151-5000-00			TRANSISTOR,SIG:BIPOLAR,PNP;40V,200MA,250MHZ ,AMPLIFIER;MMBT3906L,TO-236/SOT-23,8MM T&R	04713	MMBT3906LT1
A10Q985	151-5016-00			TRANSISTOR,SIG:BIPOLAR,PNP;20V,30MA,600MHZ, AMPLIFIER;MMBTH81L,TO-236/SOT-23,8MM T&R	80009	151-5016-00
A10Q986	151-5016-00			TRANSISTOR,SIG:BIPOLAR,PNP;20V,30MA,600MHZ, AMPLIFIER;MMBTH81L,TO-236/SOT-23,8MM T&R	80009	151-5016-00
A10R172	321-5018-00			RES,FXD:METAL FILM;1.0K OHM,1%,0.125W,TC=10 0 PPM;1206,T&R	80009	321-5018-00
A10R174	321-5018-00			RES,FXD:METAL FILM;1.0K OHM,1%,0.125W,TC=10 0 PPM;1206,T&R	80009	321-5018-00
A10R175	321-5018-00			RES,FXD:METAL FILM;1.0K OHM,1%,0.125W,TC=10 0 PPM;1206,T&R	80009	321-5018-00
A10R176	321-5015-00			RES,FXD:METAL FILM;562 OHM,1%,0.125W,TC=100 PPM;1206,T&R	80009	321-5015-00
A10R177	321-5018-00			RES,FXD:METAL FILM;1.0K OHM,1%,0.125W,TC=10 0 PPM;1206,T&R	80009	321-5018-00
A10R180	321-5006-00			RES,FXD:METAL FILM;100 OHM,1%,0.125W,TC=100 PPM;1206,T&R	80009	321-5006-00
A10R184	321-5018-00			RES,FXD:METAL FILM;1.0K OHM,1%,0.125W,TC=10 0 PPM;1206,T&R	80009	321-5018-00
A10R185	321-5018-00			RES,FXD:METAL FILM;1.0K OHM,1%,0.125W,TC=10 0 PPM;1206,T&R	80009	321-5018-00
A10R186	321-5018-00			RES,FXD:METAL FILM;1.0K OHM,1%,0.125W,TC=10 0 PPM;1206,T&R	80009	321-5018-00
A10R190	321-5018-00			RES,FXD:METAL FILM;1.0K OHM,1%,0.125W,TC=10 0 PPM;1206,T&R	80009	321-5018-00
A10R191	321-5018-00			RES,FXD:METAL FILM;1.0K OHM,1%,0.125W,TC=10 0 PPM;1206,T&R	80009	321-5018-00
A10R192	321-5006-00			RES,FXD:METAL FILM;100 OHM,1%,0.125W,TC=100 PPM;1206,T&R	80009	321-5006-00
A10R194	321-5050-00			RES,FXD:METAL FILM;33.2 OHM,1%,0.125W,TC=10 0 PPM;1206,T&R	57668	MCR18FWEA33E2
A10R196	321-5011-00			RES,FXD:METAL FILM;274 OHM,1%,0.125W,TC=100 PPM;1206,T&R	80009	321-5011-00
A10R197	321-5044-00			RES,FXD:METAL FILM;56.2 OHM,1%,0.125W,TC=10 0 PPM;1206,T&R	01121	BCD56R2FT
A10R198	321-5044-00			RES,FXD:METAL FILM;56.2 OHM,1%,0.125W,TC=10 0 PPM;1206,T&R	01121	BCD56R2FT
A10R199	321-5026-00			RES,FXD:METAL FILM;4.75K OHM,1%,0.125W,TC=1 00 PPM;1206,T&R	80009	321-5026-00
A10R242	321-5026-00			RES,FXD:METAL FILM;4.75K OHM,1%,0.125W,TC=1 00 PPM;1206,T&R	80009	321-5026-00
A10R250	321-5014-00			RES,FXD:METAL FILM;475 OHM,1%,0.125W,TC=100 PPM;1206,T&R	80009	321-5014-00

Component No.	Tektronix Part No.	Serial/Assembly No. Effective	Dscont	Name & Description	Mfr. Code	Mfr. Part No.
A10R260	321-5026-00			RES,FXD:METAL FILM;4.75K OHM,1%,0.125W,TC=100 PPM;1206,T&R	80009	321-5026-00
A10R261	321-5006-00			RES,FXD:METAL FILM;100 OHM,1%,0.125W,TC=100 PPM;1206,T&R	80009	321-5006-00
A10R266	321-5026-00			RES,FXD:METAL FILM;4.75K OHM,1%,0.125W,TC=100 PPM;1206,T&R	80009	321-5026-00
A10R267	321-5026-00			RES,FXD:METAL FILM;4.75K OHM,1%,0.125W,TC=100 PPM;1206,T&R	80009	321-5026-00
A10R280	321-5018-00			RES,FXD:METAL FILM;1.0K OHM,1%,0.125W,TC=100 PPM;1206,T&R	80009	321-5018-00
A10R281	321-5030-00			RES,FXD:METAL FILM;10.0K OHM,1%,0.125W,TC=100 PPM;1206,T&R	80009	321-5030-00
A10R290	321-5011-00			RES,FXD:METAL FILM;274 OHM,1%,0.125W,TC=100 PPM;1206,T&R	80009	321-5011-00
A10R291	321-5004-00			RES,FXD:METAL FILM;22.1 OHM,1%,0.125W,TC=100 PPM;1206,T&R	80009	321-5004-00
A10R292	321-5018-00			RES,FXD:METAL FILM;1.0K OHM,1%,0.125W,TC=100 PPM;1206,T&R	80009	321-5018-00
A10R340	321-5026-00			RES,FXD:METAL FILM;4.75K OHM,1%,0.125W,TC=100 PPM;1206,T&R	80009	321-5026-00
A10R342	321-5026-00			RES,FXD:METAL FILM;4.75K OHM,1%,0.125W,TC=100 PPM;1206,T&R	80009	321-5026-00
A10R344	321-5026-00			RES,FXD:METAL FILM;4.75K OHM,1%,0.125W,TC=100 PPM;1206,T&R	80009	321-5026-00
A10R345	321-5026-00			RES,FXD:METAL FILM;4.75K OHM,1%,0.125W,TC=100 PPM;1206,T&R	80009	321-5026-00
A10R350	321-5006-00			RES,FXD:METAL FILM;100 OHM,1%,0.125W,TC=100 PPM;1206,T&R	80009	321-5006-00
A10R365	321-5026-00			RES,FXD:METAL FILM;4.75K OHM,1%,0.125W,TC=100 PPM;1206,T&R	80009	321-5026-00
A10R370	321-5026-00			RES,FXD:METAL FILM;4.75K OHM,1%,0.125W,TC=100 PPM;1206,T&R	80009	321-5026-00
A10R375	321-5026-00			RES,FXD:METAL FILM;4.75K OHM,1%,0.125W,TC=100 PPM;1206,T&R	80009	321-5026-00
A10R380	321-5026-00			RES,FXD:METAL FILM;4.75K OHM,1%,0.125W,TC=100 PPM;1206,T&R	80009	321-5026-00
A10R420	321-5026-00			RES,FXD:METAL FILM;4.75K OHM,1%,0.125W,TC=100 PPM;1206,T&R	80009	321-5026-00
A10R520	321-5018-00			RES,FXD:METAL FILM;1.0K OHM,1%,0.125W,TC=100 PPM;1206,T&R	80009	321-5018-00
A10R524	321-5026-00			RES,FXD:METAL FILM;4.75K OHM,1%,0.125W,TC=100 PPM;1206,T&R	80009	321-5026-00
A10R526	321-5030-00			RES,FXD:METAL FILM;10.0K OHM,1%,0.125W,TC=100 PPM;1206,T&R	80009	321-5030-00
A10R527	321-5030-00			RES,FXD:METAL FILM;10.0K OHM,1%,0.125W,TC=100 PPM;1206,T&R	80009	321-5030-00
A10R535	321-5026-00			RES,FXD:METAL FILM;4.75K OHM,1%,0.125W,TC=100 PPM;1206,T&R	80009	321-5026-00
A10R574	321-5034-00			RES,FXD:METAL FILM;22.1K OHM,1%,0.125W,TC=100 PPM;1206,T&R	80009	321-5034-00
A10R696	321-5026-00			RES,FXD:METAL FILM;4.75K OHM,1%,0.125W,TC=100 PPM;1206,T&R	80009	321-5026-00
A10R886	321-5004-00			RES,FXD:METAL FILM;22.1 OHM,1%,0.125W,TC=100 PPM;1206,T&R	80009	321-5004-00
A10R887	321-5018-00			RES,FXD:METAL FILM;1.0K OHM,1%,0.125W,TC=100 PPM;1206,T&R	80009	321-5018-00
A10R890	321-5026-00			RES,FXD:METAL FILM;4.75K OHM,1%,0.125W,TC=100 PPM;1206,T&R	80009	321-5026-00

Component No.	Tektronix Part No.	Serial/Assembly No. Effective	Dscont	Name & Description	Mfr. Code	Mfr. Part No.
A10R895	321-5018-00			RES,FXD:METAL FILM;1.0K OHM,1%,0.125W,TC=100 PPM;1206,T&R	80009	321-5018-00
A10R970	321-5007-00			RES,FXD:METAL FILM;121 OHM,1%,0.125W,TC=100 PPM;1206,T&R	80009	321-5007-00
A10R971	321-5018-00			RES,FXD:METAL FILM;1.0K OHM,1%,0.125W,TC=100 PPM;1206,T&R	80009	321-5018-00
A10R972	321-5026-00			RES,FXD:METAL FILM;4.75K OHM,1%,0.125W,TC=100 PPM;1206,T&R	80009	321-5026-00
A10R973	321-5026-00			RES,FXD:METAL FILM;4.75K OHM,1%,0.125W,TC=100 PPM;1206,T&R	80009	321-5026-00
A10R974	321-5018-00			RES,FXD:METAL FILM;1.0K OHM,1%,0.125W,TC=100 PPM;1206,T&R	80009	321-5018-00
A10R975	321-5018-00			RES,FXD:METAL FILM;1.0K OHM,1%,0.125W,TC=100 PPM;1206,T&R	80009	321-5018-00
A10R976	321-5012-00			RES,FXD:METAL FILM;332 OHM,1%,0.125W,TC=100 PPM;1206,T&R	80009	321-5012-00
A10R977	321-5026-00			RES,FXD:METAL FILM;4.75K OHM,1%,0.125W,TC=100 PPM;1206,T&R	80009	321-5026-00
A10R978	321-5044-00			RES,FXD:METAL FILM;56.2 OHM,1%,0.125W,TC=100 PPM;1206,T&R	01121	BCD56R2FT
A10R979	321-5018-00			RES,FXD:METAL FILM;1.0K OHM,1%,0.125W,TC=100 PPM;1206,T&R	80009	321-5018-00
A10R980	321-5026-00			RES,FXD:METAL FILM;4.75K OHM,1%,0.125W,TC=100 PPM;1206,T&R	80009	321-5026-00
A10R981	321-5044-00			RES,FXD:METAL FILM;56.2 OHM,1%,0.125W,TC=100 PPM;1206,T&R	01121	BCD56R2FT
A10R982	321-5015-00			RES,FXD:METAL FILM;562 OHM,1%,0.125W,TC=100 PPM;1206,T&R	80009	321-5015-00
A10R984	321-5004-00			RES,FXD:METAL FILM;22.1 OHM,1%,0.125W,TC=100 PPM;1206,T&R	80009	321-5004-00
A10R985	321-5011-00			RES,FXD:METAL FILM;274 OHM,1%,0.125W,TC=100 PPM;1206,T&R	80009	321-5011-00
A10R986	321-5011-00			RES,FXD:METAL FILM;274 OHM,1%,0.125W,TC=100 PPM;1206,T&R	80009	321-5011-00
A10R987	321-5018-00			RES,FXD:METAL FILM;1.0K OHM,1%,0.125W,TC=100 PPM;1206,T&R	80009	321-5018-00
A10R990	321-5018-00			RES,FXD:METAL FILM;1.0K OHM,1%,0.125W,TC=100 PPM;1206,T&R	80009	321-5018-00
A10R991	321-5018-00			RES,FXD:METAL FILM;1.0K OHM,1%,0.125W,TC=100 PPM;1206,T&R	80009	321-5018-00
A10R992	321-5015-00			RES,FXD:METAL FILM;562 OHM,1%,0.125W,TC=100 PPM;1206,T&R	80009	321-5015-00
A10R993	321-5018-00			RES,FXD:METAL FILM;1.0K OHM,1%,0.125W,TC=100 PPM;1206,T&R	80009	321-5018-00
A10R994	321-5044-00			RES,FXD:METAL FILM;56.2 OHM,1%,0.125W,TC=100 PPM;1206,T&R	01121	BCD56R2FT
A10R995	321-5018-00			RES,FXD:METAL FILM;1.0K OHM,1%,0.125W,TC=100 PPM;1206,T&R	80009	321-5018-00
A10U120	160-7552-01	B010100	B010280	IC,DIGITAL:CMOS,EPROM;131072 X 8,PRGM 156-3621-00,250NS,27C010,DIP32.6	80009	160-7552-01
A10U120	160-8928-00	B010281		IC,DIGITAL:CMOS,EPROM;131072 X 8 PRGM 156-3267-00,250NS,27C010,DIP32.6	80009	160-8928-00
A10U130	156-5286-00			IC,MEMORY:CMOS,SRAM;32K X 8,120NS,50UA,OE;43256,SO28M.330,TUBE	80009	156-5286-00
A10U170	156-5269-00			IC,DIGITAL:ECL,RECEIVER;TRIPLE LINE;10H116,PLCC20,TUBE	80009	156-5269-00
A10U175	156-5269-00			IC,DIGITAL:ECL,RECEIVER;TRIPLE LINE;10H116,PLCC20,TUBE	80009	156-5269-00

Component No.	Tektronix Part No.	Serial/Assembly No. Effective	Dscont	Name & Description	Mfr. Code	Mfr. Part No.
A10U185	156-5269-00			IC,DIGITAL:ECL,RECEIVER;TRIPLE LINE;10H116, PLCC20,TUBE	80009	156-5269-00
A10U195	156-5221-00			IC,DIGITAL:ECL,FLIP FLOP;DUAL D-TYPE;10H131 ,PLCC20,TUBE	80009	156-5221-00
A10U220	160-7551-01	B010100	B010280	IC,DIGITAL:CMOS,EPROM;131072 X 8,PRGM 156-3 267-00,250NS,27C010,DIP32.6	80009	160-7551-01
A10U220	160-8927-00	B010281		IC,DIGITAL:CMOS,EPROM;131072 X 8 PRGM 156-3 267-00,250NS,27C010,DIP32.6	80009	160-8927-00
A10U230	156-5286-00			IC,MEMORY:CMOS,SRAM;32K X 8,120NS,50UA,OE;4 3256,SO28M.330,TUBE	80009	156-5286-00
A10U240	156-5144-00			IC,DIGITAL:HCTCMOS,FLIP FLOP;QUAD D-TYPE, C LEAR;74HCT175,SO16.150,TUBE	80009	156-5144-00
A10U245	156-5146-00			IC,DIGITAL:HCTCMOS,GATE;QUAD 2-INPUT AND;74 HCT08,SO14.150,TUBE	80009	156-5146-00
A10U250	156-5301-00			IC,PROCESSOR:CMOS,MICROPROCESSOR;16-BIT,8 M HZ;70108L,PLCC44	80009	156-5301-00
A10U260	156-5145-00			IC,DIGITAL:HCTCMOS,FLIP FLOP;DUAL D-TYPE;74 HCT74,SO14.150,TUBE	80009	156-5145-00
A10U270	156-5239-00			IC,DIGITAL:HCTCMOS,BUFFER;OCTAL INV, BUFFER /DRIVER, 3-STATE;74HCT240,SO20.300,TUBE	80009	156-5239-00
A10U280	156-5070-00			IC,DIGITAL:HCTCMOS,BUFFER;OCTAL BUFFER/DRIV ER, 3-STATE;74HCT244,SO20.300,TUBE	80009	156-5070-00
A10U290	156-5285-00			IC,DIGITAL:FTTL,COUNTER;SYNCH 4-BIT UP/DOWN BINARY, WITH SEPARATE CP;74F193,SO16.150,T UBE	80009	156-5285-00
A10U294	156-5268-00			IC,DIGITAL:FTTL,SCHMITT TRIG;HEX INV;74F14, SO14.150,TUBE	80009	156-5268-00
A10U295	156-5285-00			IC,DIGITAL:FTTL,COUNTER;SYNCH 4-BIT UP/DOWN BINARY, WITH SEPARATE CP;74F193,SO16.150,T UBE	80009	156-5285-00
A10U320	160-7550-01	B010100	B010280	IC,DIGITAL:CMOS,EPROM;131072 X 8,PRGM 156-3 267-00,250NS,27C010,DIP32.6	80009	160-7550-01
A10U320	160-8926-00	B010281		IC,DIGITAL:CMOS,EPROM;131072 X 8 PRGM 156-3 267-00,250NS,27C010,DIP32.6	80009	160-8926-00
A10U330	156-5286-00			IC,MEMORY:CMOS,SRAM;32K X 8,120NS,50UA,OE;4 3256,SO28M.330,TUBE	80009	156-5286-00
A10U340	156-5093-00			IC,PROCESSOR:CMOS,PERIPHERAL;PROGRAMMABLE I NTERRUPT CONTROLLER, 5MHZ;82C59A-5,PLCC28	80009	156-5093-00
A10U360	156-5302-00			IC,DIGITAL:CMOS,MISC;CLOCK GENERATOR/DRIVER ,8MHZ;71011,SO20M.200,TUBE,SMD	80009	156-5302-00
A10U365	156-5085-00			IC,DIGITAL:HCTCMOS,GATE;QUAD 2-INPUT OR;74H CT32,SO14.150,TUBE	80009	156-5085-00
A10U370	156-5284-00			IC,DIGITAL:LSTTL,COUNTER;8-BIT BINARY, WITH INPUT REGISTER, 3-STATE;74LS593,SO20.300,T UBE	80009	156-5284-00
A10U380	156-5284-00			IC,DIGITAL:LSTTL,COUNTER;8-BIT BINARY, WITH INPUT REGISTER, 3-STATE;74LS593,SO20.300,T UBE	80009	156-5284-00
A10U385	156-5101-01			IC,DIGITAL:HCTCMOS,LATCH;OCTAL D-TYPE, 3-ST ATE;74HCT373,SO20.300,24MM T&R	80009	156-5101-01
A10U395	156-5220-01			IC,DIGITAL:HCTCMOS,BUFFER;OCTAL BUFFER/DRIV ER, 3-STATE;74HCT541,SO20.300,24MM T&R	80009	156-5220-01
A10U420	160-7549-01	B010100	B010280	IC,DIGITAL:CMOS,EPROM;131072 X 8,PRGM 156-3 267-00,250NS,27C010,DIP32.6	80009	160-7549-01
A10U420	160-8925-00	B010281		IC,DIGITAL:CMOS,EPROM;131072 X 8 PRGM 156-3 267-00,250NS,27C010,DIP32.6	80009	160-8925-00
A10U430	156-5286-00			IC,MEMORY:CMOS,SRAM;32K X 8,120NS,50UA,OE;4 3256,SO28M.330,TUBE	80009	156-5286-00
A10U440	156-5101-01			IC,DIGITAL:HCTCMOS,LATCH;OCTAL D-TYPE, 3-ST ATE;74HCT373,SO20.300,24MM T&R	80009	156-5101-01

Component No.	Tektronix Part No.	Serial/Assembly No. Effective	Dscont	Name & Description	Mfr. Code	Mfr. Part No.
A10U450	156-5101-01			IC,DIGITAL:HCTCMOS,LATCH;OCTAL D-TYPE, 3-STATE;74HCT373,SO20.300,24MM T&R	80009	156-5101-01
A10U460	156-5071-00			IC,DIGITAL:HCTCMOS,TRANSCEIVER;OCTAL, 3-STATE;74HCT245,SO20.300,TUBE	80009	156-5071-00
A10U465	156-5101-01			IC,DIGITAL:HCTCMOS,LATCH;OCTAL D-TYPE, 3-STATE;74HCT373,SO20.300,24MM T&R	80009	156-5101-01
A10U470	156-5092-00			IC,PROCESSOR:CMOS,PERIPHERAL;PROGRAMMABLE INTERVAL TIMER, 8MHZ;82C54,PLCC28	80009	156-5092-00
A10U480	156-5284-00			IC,DIGITAL:LSTTL,COUNTER;8-BIT BINARY, WITH INPUT REGISTER, 3-STATE;74LS593,SO20.300,TUBE	80009	156-5284-00
A10U485	156-5070-00			IC,DIGITAL:HCTCMOS,BUFFER;OCTAL BUFFER/DRIVER, 3-STATE;74HCT244,SO20.300,TUBE	80009	156-5070-00
A10U495	156-5101-01			IC,DIGITAL:HCTCMOS,LATCH;OCTAL D-TYPE, 3-STATE;74HCT373,SO20.300,24MM T&R	80009	156-5101-01
A10U515	160-5430-00			MICROCKT,DGTL:STTL,ADDRESS DECODER,PRGM	80009	160-5430-00
A10U530	160-5431-00			MICROCKT,DGTL:STTL,ADDRESS DECODER,PRGM	80009	160-5431-00
A10U540	156-5220-01			IC,DIGITAL:HCTCMOS,BUFFER;OCTAL BUFFER/DRIVER, 3-STATE;74HCT541,SO20.300,24MM T&R	80009	156-5220-01
A10U550	156-5220-01			IC,DIGITAL:HCTCMOS,BUFFER;OCTAL BUFFER/DRIVER, 3-STATE;74HCT541,SO20.300,24MM T&R	80009	156-5220-01
A10U560	156-5071-00			IC,DIGITAL:HCTCMOS,TRANSCEIVER;OCTAL, 3-STATE;74HCT245,SO20.300,TUBE	80009	156-5071-00
A10U565	156-5070-00			IC,DIGITAL:HCTCMOS,BUFFER;OCTAL BUFFER/DRIVER, 3-STATE;74HCT244,SO20.300,TUBE	80009	156-5070-00
A10U570	156-5071-00			IC,DIGITAL:HCTCMOS,TRANSCEIVER;OCTAL, 3-STATE;74HCT245,SO20.300,TUBE	80009	156-5071-00
A10U580	156-5092-00			IC,PROCESSOR:CMOS,PERIPHERAL;PROGRAMMABLE INTERVAL TIMER, 8MHZ;82C54,PLCC28	80009	156-5092-00
A10U585	156-5123-00			IC,DIGITAL:HCTCMOS,DEMUX/DECODER;4-TO-16 DECODER;74HCT154,SO24.300,TUBE	80009	156-5123-00
A10U595	156-5220-01			IC,DIGITAL:HCTCMOS,BUFFER;OCTAL BUFFER/DRIVER, 3-STATE;74HCT541,SO20.300,24MM T&R	80009	156-5220-01
A10W518	321-5051-00			RES,FXD:METAL FILM;0 OHM,1%,0.125W,TC=100 PPM;1206,T&R	80009	321-5051-00
A10W525	321-5051-00			RES,FXD:METAL FILM;0 OHM,1%,0.125W,TC=100 PPM;1206,T&R	80009	321-5051-00
A10W526	321-5051-00			RES,FXD:METAL FILM;0 OHM,1%,0.125W,TC=100 PPM;1206,T&R	80009	321-5051-00
A10W577	321-5018-00			RES,FXD:METAL FILM;1.0K OHM,1%,0.125W,TC=100 PPM;1206,T&R	80009	321-5018-00
A10W578	321-5018-00			RES,FXD:METAL FILM;1.0K OHM,1%,0.125W,TC=100 PPM;1206,T&R	80009	321-5018-00
A10Y350	158-0390-00			XTAL UNIT,QTZ:14.745600 MHZ,+/-0.005%,PARALLEL,CL=20 PF, ESR=25 OHMSHC-18/U PKG	80009	158-0390-00
A11	671-1858-01			CIRCUIT BD ASSY:RS232 (OPTION 08 ONLY)	80009	671-1858-01
A11BT600	146-0044-00			BATTERY,DRY:3V,0.17AH @ 0.85MA,BUTTON CELL, LITHIUM-MANGANESE DIOXIDE	00681	ORDER BY DESCR
A11C110	283-5004-00			CAP,FXD,CER DI:0.1UF,10%,25V	80009	283-5004-00
A11C120	283-5004-00			CAP,FXD,CER DI:0.1UF,10%,25V	80009	283-5004-00
A11C200	283-5004-00			CAP,FXD,CER DI:0.1UF,10%,25V	80009	283-5004-00
A11C220	283-5004-00			CAP,FXD,CER DI:0.1UF,10%,25V	80009	283-5004-00
A11C250	283-5004-00			CAP,FXD,CER DI:0.1UF,10%,25V	80009	283-5004-00
A11C290	283-5004-00			CAP,FXD,CER DI:0.1UF,10%,25V	80009	283-5004-00
A11C310	283-5004-00			CAP,FXD,CER DI:0.1UF,10%,25V	80009	283-5004-00
A11C320	283-5004-00			CAP,FXD,CER DI:0.1UF,10%,25V	80009	283-5004-00
A11C330	283-5004-00			CAP,FXD,CER DI:0.1UF,10%,25V	80009	283-5004-00
A11C340	283-5004-00			CAP,FXD,CER DI:0.1UF,10%,25V	80009	283-5004-00

Component No.	Tektronix Part No.	Serial/Assembly No. Effective	Dscont	Name & Description	Mfr. Code	Mfr. Part No.
A11C350	283-5004-00			CAP,FXD,CER DI:0.1UF,10%,25V	80009	283-5004-00
A11C360	283-5004-00			CAP,FXD,CER DI:0.1UF,10%,25V	80009	283-5004-00
A11C361	283-5004-00			CAP,FXD,CER DI:0.1UF,10%,25V	80009	283-5004-00
A11C420	283-5004-00			CAP,FXD,CER DI:0.1UF,10%,25V	80009	283-5004-00
A11C430	283-5004-00			CAP,FXD,CER DI:0.1UF,10%,25V	80009	283-5004-00
A11C440	283-5004-00			CAP,FXD,CER DI:0.1UF,10%,25V	80009	283-5004-00
A11C450	283-5004-00			CAP,FXD,CER DI:0.1UF,10%,25V	80009	283-5004-00
A11C460	283-5004-00			CAP,FXD,CER DI:0.1UF,10%,25V	80009	283-5004-00
A11C480	283-5004-00			CAP,FXD,CER DI:0.1UF,10%,25V	80009	283-5004-00
A11C513	283-5001-00			CAP,FXD,CER DI:100PF,5%,50V	80009	283-5001-00
A11C710	290-0944-00			CAP,FXD,ELCTLT:220UF,+50-20%,10V	55680	UVX1C221MPA
A11C860	290-0944-00			CAP,FXD,ELCTLT:220UF,+50-20%,10V	55680	UVX1C221MPA
A11C920	290-0944-00			CAP,FXD,ELCTLT:220UF,+50-20%,10V	55680	UVX1C221MPA
A11C990	290-0944-00			CAP,FXD,ELCTLT:220UF,+50-20%,10V	55680	UVX1C221MPA
A11CR110	152-0457-00			SEMICOND DVC,DI:SW,SI,25V,DO-35	28480	5082-2068
A11J140	131-2920-00			CONN,HDR:PCB,;MALE,RTANG,2 X 5,0.1 CTR,0.31 8 MLG X 0.110 TAIL,0.238 H,30 GOLD;,,	80009	131-2920-00
A11J150	131-2920-00			CONN,HDR:PCB,;MALE,RTANG,2 X 5,0.1 CTR,0.31 8 MLG X 0.110 TAIL,0.238 H,30 GOLD;,,	80009	131-2920-00
A11J340	131-1857-00			CONN,HDR:PCB,;MALE,STR,1 X 36,0.1 CTR,0.230 MLG X 0.100 TAIL,GOLD;,,	58050	082-3644-SS10
A11J500	131-1857-00			CONN,HDR:PCB,;MALE,STR,1 X 36,0.1 CTR,0.230 MLG X 0.100 TAIL,GOLD;,,	58050	082-3644-SS10
A11J501	131-1857-00			CONN,HDR:PCB,;MALE,STR,1 X 36,0.1 CTR,0.230 MLG X 0.100 TAIL,GOLD;,,	58050	082-3644-SS10
A11J510	131-1857-00			CONN,HDR:PCB,;MALE,STR,1 X 36,0.1 CTR,0.230 MLG X 0.100 TAIL,GOLD;,,	58050	082-3644-SS10
A11J511	131-1857-00			CONN,HDR:PCB,;MALE,STR,1 X 36,0.1 CTR,0.230 MLG X 0.100 TAIL,GOLD;,,	58050	082-3644-SS10
A11J550	131-2221-00			CONN,HDR:PCB;,MALE,RTANG,2 X 25,0.1 CTR,0.3 18 MLG X 0.110 TAIL,30 GOLD;,,	22526	65626-150
A11P8	131-3556-00			CONN,RCPT,ELEC:CARD CONN,2 X 12,HORIZ	22526	66527-012
A11P500	131-3199-00			BUS,CONDUCTOR:SHUNT,;FEMALE,1 X 2,0.1 CTR,0 .200 H,LOW PROFILE,JUMPER;,,	22526	76264-101
A11Q211	151-5001-00			TRANSISTOR,SIG:BIPOLAR,NPN;40V,200MA,300MHZ ,AMPLIFIER;MMBT3904L,TO-236/SOT-23,8MM T&R	80009	151-5001-00
A11Q510	151-5001-00			TRANSISTOR,SIG:BIPOLAR,NPN;40V,200MA,300MHZ ,AMPLIFIER;MMBT3904L,TO-236/SOT-23,8MM T&R	80009	151-5001-00
A11R211	321-5030-00			RES,FXD:METAL FILM;10.0K OHM,1%,0.125W,TC=1 00 PPM;1206,T&R	80009	321-5030-00
A11R212	321-5030-00			RES,FXD:METAL FILM;10.0K OHM,1%,0.125W,TC=1 00 PPM;1206,T&R	80009	321-5030-00
A11R280	321-5030-00			RES,FXD:METAL FILM;10.0K OHM,1%,0.125W,TC=1 00 PPM;1206,T&R	80009	321-5030-00
A11R300	321-5030-00			RES,FXD:METAL FILM;10.0K OHM,1%,0.125W,TC=1 00 PPM;1206,T&R	80009	321-5030-00
A11R340	321-5026-00			RES,FXD:METAL FILM;4.75K OHM,1%,0.125W,TC=1 00 PPM;1206,T&R	80009	321-5026-00
A11R361	321-5047-00			RES,FXD:METAL FILM;100K OHM,1%,0.125W,TC=10 0 PPM;1206,T&R	80009	321-5047-00
A11R362	321-5047-00			RES,FXD:METAL FILM;100K OHM,1%,0.125W,TC=10 0 PPM;1206,T&R	80009	321-5047-00
A11R363	321-5047-00			RES,FXD:METAL FILM;100K OHM,1%,0.125W,TC=10 0 PPM;1206,T&R	80009	321-5047-00
A11R380	321-5030-00			RES,FXD:METAL FILM;10.0K OHM,1%,0.125W,TC=1 00 PPM;1206,T&R	80009	321-5030-00
A11R381	321-5030-00			RES,FXD:METAL FILM;10.0K OHM,1%,0.125W,TC=1 00 PPM;1206,T&R	80009	321-5030-00

Component No.	Tektronix Part No.	Serial/Assembly No. Effective	Dscont	Name & Description	Mfr. Code	Mfr. Part No.
A11R450	321-5047-00			RES,FXD:METAL FILM;100K OHM,1%,0.125W,TC=100 PPM;1206,T&R	80009	321-5047-00
A11R451	321-5030-00			RES,FXD:METAL FILM;10.0K OHM,1%,0.125W,TC=100 PPM;1206,T&R	80009	321-5030-00
A11R452	321-5030-00			RES,FXD:METAL FILM;10.0K OHM,1%,0.125W,TC=100 PPM;1206,T&R	80009	321-5030-00
A11R453	321-5030-00			RES,FXD:METAL FILM;10.0K OHM,1%,0.125W,TC=100 PPM;1206,T&R	80009	321-5030-00
A11R480	321-5030-00			RES,FXD:METAL FILM;10.0K OHM,1%,0.125W,TC=100 PPM;1206,T&R	80009	321-5030-00
A11R510	321-5018-00			RES,FXD:METAL FILM;1.0K OHM,1%,0.125W,TC=100 PPM;1206,T&R	80009	321-5018-00
A11R511	321-5030-00			RES,FXD:METAL FILM;10.0K OHM,1%,0.125W,TC=100 PPM;1206,T&R	80009	321-5030-00
A11R512	321-5030-00			RES,FXD:METAL FILM;10.0K OHM,1%,0.125W,TC=100 PPM;1206,T&R	80009	321-5030-00
A11R514	321-5026-00			RES,FXD:METAL FILM;4.75K OHM,1%,0.125W,TC=100 PPM;1206,T&R	80009	321-5026-00
A11U110	156-2760-00			IC,DIGITAL:CMOS,MISC;NONVOLATILE CONTROLLER CHIP;DS1210,DIP8.3,TUBE	0B0A9	DS1210
A11U130	156-2463-00			IC,DIGITAL:HCMOS,GATE;QUAD 2-INPUT OR;74HC32,DIP14.3	18324	74HC32N
A11U200	156-3629-00			IC,PROCESSOR:CMOS,PERIPHERAL;RTC, CLOCK CALENDAR;62X42,DIP18.3	80009	156-3629-00
A11U210	156-5155-00			IC,DIGITAL:HCMOS,GATE;HEX INV;74HC04,SO14.150,TUBE	80009	156-5155-00
A11U220	156-5286-00			IC,MEMORY:CMOS,SRAM;32K X 8,120NS,50UA,OE;43256,SO28M.330,TUBE	80009	156-5286-00
A11U250	156-5101-01			IC,DIGITAL:HCTCMOS,LATCH;OCTAL D-TYPE, 3-STATE;74HCT373,SO20.300,24MM T&R	80009	156-5101-01
A11U280	156-3456-00			IC,MISC:	80009	156-3456-00
A11U311	160-5433-00			MICROCKT,DGTL:STTL,PLD,FPLS,PRGM	80009	160-5433-00
A11U312	160-7548-01			IC,DIGITAL:CMOS,EPROM;131072 X 8,PRGM 156-3267-00,250NS,27C010,DIP32.6	80009	160-7548-01
A11U320	156-5286-00			IC,MEMORY:CMOS,SRAM;32K X 8,120NS,50UA,OE;43256,SO28M.330,TUBE	80009	156-5286-00
A11U330	160-5329-00			MICROCKT,DGTL:STTL.PLD,FPLA,PRGM	80009	160-5329-00
A11U340	160-5328-00			IC,DIGITAL:STTL.PLD;FPLA,PLS173,30NS,170MA, PRGM 156-5283-00;PLS173A,PLCC28-1	80009	160-5328-00
A11U350	156-5220-01			IC,DIGITAL:HCTCMOS,BUFFER;OCTAL BUFFER/DRIVER, 3-STATE;74HCT541,SO20.300,24MM T&R	80009	156-5220-01
A11U360	156-5146-00			IC,DIGITAL:HCTCMOS,GATE;QUAD 2-INPUT AND;74HCT08,SO14.150,TUBE	80009	156-5146-00
A11U361	156-5081-01			IC,DIGITAL:HCTMOS,GATE;HEX INVERTER;74HCT04,SO14.150,16MM T&R	80009	156-5081-01
A11U380	156-5527-00			IC,PROCESSOR:CMOS,PERIPHERAL;SCC, SERIAL COMMUNICATION CONTROLLER, 8MHZ;85C30,PLCC44	80009	156-5527-00
A11U410	160-7547-01			IC,DIGITAL:CMOS,EPROM;131072 X 8,PRGM 156-3267-00,250NS,27C010,DIP32.6	80009	160-7547-01
A11U420	156-5286-00			IC,MEMORY:CMOS,SRAM;32K X 8,120NS,50UA,OE;43256,SO28M.330,TUBE	80009	156-5286-00
A11U430	156-5220-01			IC,DIGITAL:HCTCMOS,BUFFER;OCTAL BUFFER/DRIVER, 3-STATE;74HCT541,SO20.300,24MM T&R	80009	156-5220-01
A11U440	156-5220-01			IC,DIGITAL:HCTCMOS,BUFFER;OCTAL BUFFER/DRIVER, 3-STATE;74HCT541,SO20.300,24MM T&R	80009	156-5220-01
A11U450	156-5071-00			IC,DIGITAL:HCTCMOS,TRANSCEIVER;OCTAL, 3-STATE;74HCT245,SO20.300,TUBE	80009	156-5071-00
A11U460	156-5220-01			IC,DIGITAL:HCTCMOS,BUFFER;OCTAL BUFFER/DRIVER, 3-STATE;74HCT541,SO20.300,24MM T&R	80009	156-5220-01

Component No.	Tektronix Part No.	Serial/Assembly No. Effective	Dscont	Name & Description	Mfr. Code	Mfr. Part No.
A11W501	321-5051-00			RES,FXD:METAL FILM;0 OHM,1%,0.125W,TC=100 PPM;1206,T&R	80009	321-5051-00
A12	672-1284-04	B010100	B010247	CIRCUIT BD ASSY:PHASELOCK CFC MODULE	80009	672-1284-04
A12	672-1284-05	B010248		CIRCUIT BD ASSY:PHASELOCK CFC MODULE	80009	672-1284-05
A12C1	281-0825-00			CAP,FXD,CER DI:0.005UF,+100-0%,100V	33095	51-726-008
A12C2	281-0825-00			CAP,FXD,CER DI:0.005UF,+100-0%,100V	33095	51-726-008
A12C3	281-0825-00			CAP,FXD,CER DI:0.005UF,+100-0%,100V	33095	51-726-008
A12C4	281-0825-00			CAP,FXD,CER DI:0.005UF,+100-0%,100V	33095	51-726-008
A12C5	281-0825-00			CAP,FXD,CER DI:0.005UF,+100-0%,100V	33095	51-726-008
A12C6	281-0825-00			CAP,FXD,CER DI:0.005UF,+100-0%,100V	33095	51-726-008
A12C7	281-0825-00			CAP,FXD,CER DI:0.005UF,+100-0%,100V	33095	51-726-008
A12C8	281-0825-00			CAP,FXD,CER DI:0.005UF,+100-0%,100V	33095	51-726-008
A12C9	281-0825-00			CAP,FXD,CER DI:0.005UF,+100-0%,100V	33095	51-726-008
A12C10	281-0825-00			CAP,FXD,CER DI:0.005UF,+100-0%,100V	33095	51-726-008
A12C11	281-0825-00			CAP,FXD,CER DI:0.005UF,+100-0%,100V	33095	51-726-008
A12J100	131-1170-00			CONN,RF JACK:	80009	131-1170-00
A12J130	131-1170-00			CONN,RF JACK:	80009	131-1170-00
A12J140	131-1170-00			CONN,RF JACK:	80009	131-1170-00
A12J240	131-1170-00			CONN,RF JACK:	80009	131-1170-00
A12J540	131-1170-00			CONN,RF JACK:	80009	131-1170-00
A12R1	322-3193-00			RES,FXD:METAL FILM;1K OHM,1%,0.2W,TC=100 PPM;AXIAL,T&R,SMALL BODY	57668	CRB20 FXE 1K00
A12R2	322-3193-00			RES,FXD:METAL FILM;1K OHM,1%,0.2W,TC=100 PPM;AXIAL,T&R,SMALL BODY	57668	CRB20 FXE 1K00
A12R3	317-0101-00			RES,FXD,CMPSN:100 OHM,5%,0.125W	80009	317-0101-00
A12A1	----- -----			(PART OF A12) PHASELOCK CF CONTROL		
A12A1C100	290-5002-00			CAP,FXD,ELCTLT:10UF,20V	TK1424	20MC100M-TER
A12A1C101	290-5002-00			CAP,FXD,ELCTLT:10UF,20V	TK1424	20MC100M-TER
A12A1C112	290-5002-00			CAP,FXD,ELCTLT:10UF,20V	TK1424	20MC100M-TER
A12A1C120	290-5002-00			CAP,FXD,ELCTLT:10UF,20V	TK1424	20MC100M-TER
A12A1C141	283-5004-00			CAP,FXD,CER DI:0.1UF,10%,25V	80009	283-5004-00
A12A1C150	283-5004-00			CAP,FXD,CER DI:0.1UF,10%,25V	80009	283-5004-00
A12A1C163	283-5004-00			CAP,FXD,CER DI:0.1UF,10%,25V	80009	283-5004-00
A12A1C167	283-5004-00			CAP,FXD,CER DI:0.1UF,10%,25V	80009	283-5004-00
A12A1C200	283-5004-00			CAP,FXD,CER DI:0.1UF,10%,25V	80009	283-5004-00
A12A1C201	283-5004-00			CAP,FXD,CER DI:0.1UF,10%,25V	80009	283-5004-00
A12A1C205	283-5004-00			CAP,FXD,CER DI:0.1UF,10%,25V	80009	283-5004-00
A12A1C211	290-5002-00			CAP,FXD,ELCTLT:10UF,20V	TK1424	20MC100M-TER
A12A1C213	290-5002-00			CAP,FXD,ELCTLT:10UF,20V	TK1424	20MC100M-TER
A12A1C214	290-5002-00			CAP,FXD,ELCTLT:10UF,20V	TK1424	20MC100M-TER
A12A1C220	283-5025-00			CAP,FXD,CER DI:220PF,5%,50V	80009	283-5025-00
A12A1C221	290-5002-00			CAP,FXD,ELCTLT:10UF,20V	TK1424	20MC100M-TER
A12A1C230	290-5002-00			CAP,FXD,ELCTLT:10UF,20V	TK1424	20MC100M-TER
A12A1C231	290-5002-00			CAP,FXD,ELCTLT:10UF,20V	TK1424	20MC100M-TER
A12A1C235	290-5002-00			CAP,FXD,ELCTLT:10UF,20V	TK1424	20MC100M-TER
A12A1C240	290-5002-00			CAP,FXD,ELCTLT:10UF,20V	TK1424	20MC100M-TER
A12A1C245	290-5002-00			CAP,FXD,ELCTLT:10UF,20V	TK1424	20MC100M-TER
A12A1C251	283-5004-00			CAP,FXD,CER DI:0.1UF,10%,25V	80009	283-5004-00
A12A1C252	283-5004-00			CAP,FXD,CER DI:0.1UF,10%,25V	80009	283-5004-00
A12A1C255	283-5004-00			CAP,FXD,CER DI:0.1UF,10%,25V	80009	283-5004-00
A12A1C262	283-5022-00			CAP,FXD,CER DI:47PF,5%,50V	54583	
A12A1C280	290-5002-00			CAP,FXD,ELCTLT:10UF,20V	TK1424	20MC100M-TER
A12A1C281	283-5004-00			CAP,FXD,CER DI:0.1UF,10%,25V	80009	283-5004-00
A12A1C282	290-5002-00			CAP,FXD,ELCTLT:10UF,20V	TK1424	20MC100M-TER
A12A1C290	290-0963-00			CAP,FXD,ELCTLT:220UF,+50-20%,25WVDC	80009	290-0963-00
A12A1C292	290-0963-00			CAP,FXD,ELCTLT:220UF,+50-20%,25WVDC	80009	290-0963-00
A12A1C300	290-5002-00			CAP,FXD,ELCTLT:10UF,20V	TK1424	20MC100M-TER
A12A1C310	290-5002-00			CAP,FXD,ELCTLT:10UF,20V	TK1424	20MC100M-TER
A12A1C312	290-5002-00			CAP,FXD,ELCTLT:10UF,20V	TK1424	20MC100M-TER

Component No.	Tektronix Part No.	Serial/Assembly No. Effective	Dscont	Name & Description	Mfr. Code	Mfr. Part No.
A12A1C314	290-5002-00			CAP,FXD,ELCTLT:10UF,20V	TK1424	20MC100M-TER
A12A1C321	290-5002-00			CAP,FXD,ELCTLT:10UF,20V	TK1424	20MC100M-TER
A12A1C322	290-5002-00			CAP,FXD,ELCTLT:10UF,20V	TK1424	20MC100M-TER
A12A1C333	283-5004-00			CAP,FXD,CER DI:0.1UF,10%,25V	80009	283-5004-00
A12A1C334	283-5004-00			CAP,FXD,CER DI:0.1UF,10%,25V	80009	283-5004-00
A12A1C337	283-5004-00			CAP,FXD,CER DI:0.1UF,10%,25V	80009	283-5004-00
A12A1C338	283-5004-00			CAP,FXD,CER DI:0.1UF,10%,25V	80009	283-5004-00
A12A1C340	290-5002-00			CAP,FXD,ELCTLT:10UF,20V	TK1424	20MC100M-TER
A12A1C341	290-5002-00			CAP,FXD,ELCTLT:10UF,20V	TK1424	20MC100M-TER
A12A1C342	290-5002-00			CAP,FXD,ELCTLT:10UF,20V	TK1424	20MC100M-TER
A12A1C343	290-5002-00			CAP,FXD,ELCTLT:10UF,20V	TK1424	20MC100M-TER
A12A1C352	290-5002-00			CAP,FXD,ELCTLT:10UF,20V	TK1424	20MC100M-TER
A12A1C374	283-5014-00			CAP,FXD,CER DI:330PF,5%,50V	80009	283-5014-00
A12A1C388	290-0536-00			CAP,FXD,ELCTLT:10UF,20%,25V TANTALUM	05397	T368B106M025AS
A12A1C389	290-5002-00			CAP,FXD,ELCTLT:10UF,20V	TK1424	20MC100M-TER
A12A1C390	283-5004-00			CAP,FXD,CER DI:0.1UF,10%,25V	80009	283-5004-00
A12A1C392	290-0963-00			CAP,FXD,ELCTLT:220UF,+50-20%,25WVDC	80009	290-0963-00
A12A1C395	290-0963-00			CAP,FXD,ELCTLT:220UF,+50-20%,25WVDC	80009	290-0963-00
A12A1C410	290-5002-00			CAP,FXD,ELCTLT:10UF,20V	TK1424	20MC100M-TER
A12A1C411	290-5002-00			CAP,FXD,ELCTLT:10UF,20V	TK1424	20MC100M-TER
A12A1C420	290-5002-00			CAP,FXD,ELCTLT:10UF,20V	TK1424	20MC100M-TER
A12A1C421	290-5002-00			CAP,FXD,ELCTLT:10UF,20V	TK1424	20MC100M-TER
A12A1C422	290-5002-00			CAP,FXD,ELCTLT:10UF,20V	TK1424	20MC100M-TER
A12A1C442	290-5002-00			CAP,FXD,ELCTLT:10UF,20V	TK1424	20MC100M-TER
A12A1C443	290-5002-00			CAP,FXD,ELCTLT:10UF,20V	TK1424	20MC100M-TER
A12A1C445	290-5002-00			CAP,FXD,ELCTLT:10UF,20V	TK1424	20MC100M-TER
A12A1C452	290-5002-00			CAP,FXD,ELCTLT:10UF,20V	TK1424	20MC100M-TER
A12A1C480	290-0944-00			CAP,FXD,ELCTLT:220UF,+50-20%,10V	55680	UVX1C221MPA
A12A1C483	283-5004-00			CAP,FXD,CER DI:0.1UF,10%,25V	80009	283-5004-00
A12A1C520	290-5002-00			CAP,FXD,ELCTLT:10UF,20V	TK1424	20MC100M-TER
A12A1C540	290-5002-00			CAP,FXD,ELCTLT:10UF,20V	TK1424	20MC100M-TER
A12A1C562	283-5015-00			CAP,FXD,CER DI:3300PF,10%,50V	54583	
A12A1C567	283-5015-00			CAP,FXD,CER DI:3300PF,10%,50V	54583	
A12A1C605	283-5004-00			CAP,FXD,CER DI:0.1UF,10%,25V	80009	283-5004-00
A12A1C611	283-5014-00			CAP,FXD,CER DI:330PF,5%,50V	80009	283-5014-00
A12A1C612	283-5004-00			CAP,FXD,CER DI:0.1UF,10%,25V	80009	283-5004-00
A12A1C616	283-5004-00			CAP,FXD,CER DI:0.1UF,10%,25V	80009	283-5004-00
A12A1C623	283-5004-00			CAP,FXD,CER DI:0.1UF,10%,25V	80009	283-5004-00
A12A1C625	283-5004-00			CAP,FXD,CER DI:0.1UF,10%,25V	80009	283-5004-00
A12A1C630	283-5008-00			CAP,FXD,CER DI:12PF,5%,50V	54583	C3216C0G1H120J
A12A1C635	283-5004-00			CAP,FXD,CER DI:0.1UF,10%,25V	80009	283-5004-00
A12A1C660	290-5002-00			CAP,FXD,ELCTLT:10UF,20V	TK1424	20MC100M-TER
A12A1C671	290-5002-00			CAP,FXD,ELCTLT:10UF,20V	TK1424	20MC100M-TER
A12A1C672	290-5002-00			CAP,FXD,ELCTLT:10UF,20V	TK1424	20MC100M-TER
A12A1C710	283-5004-00			CAP,FXD,CER DI:0.1UF,10%,25V	80009	283-5004-00
A12A1C711	283-5001-00			CAP,FXD,CER DI:100PF,5%,50V	80009	283-5001-00
A12A1C712	283-5001-00			CAP,FXD,CER DI:100PF,5%,50V	80009	283-5001-00
A12A1C714	283-5022-00			CAP,FXD,CER DI:47PF,5%,50V	54583	
A12A1C715	283-5003-00			CAP,FXD,CER DI:0.01UF,10%,50V	80009	283-5003-00
A12A1C716	283-5004-00			CAP,FXD,CER DI:0.1UF,10%,25V	80009	283-5004-00
A12A1C721	283-5042-00			CAP,FXD,CER DI:27PF,5%,50V	80009	283-5042-00
A12A1C722	283-5014-00			CAP,FXD,CER DI:330PF,5%,50V	80009	283-5014-00
A12A1C724	283-5004-00			CAP,FXD,CER DI:0.1UF,10%,25V	80009	283-5004-00
A12A1C726	283-5004-00			CAP,FXD,CER DI:0.1UF,10%,25V	80009	283-5004-00
A12A1C728	283-5004-00			CAP,FXD,CER DI:0.1UF,10%,25V	80009	283-5004-00
A12A1C729	290-5002-00			CAP,FXD,ELCTLT:10UF,20V	TK1424	20MC100M-TER
A12A1C731	283-5022-00			CAP,FXD,CER DI:47PF,5%,50V	54583	
A12A1C733	283-5022-00			CAP,FXD,CER DI:47PF,5%,50V	54583	
A12A1C735	283-5011-00			CAP,FXD,CER DI:33PF,5%,50V	95275	VJ1206A330JXA

Component No.	Tektronix Part No.	Serial/Assembly No. Effective	Dscont	Name & Description	Mfr. Code	Mfr. Part No.
A12A1C737	283-5004-00			CAP,FXD,CER DI:0.1UF,10%,25V	80009	283-5004-00
A12A1C738	283-5004-00			CAP,FXD,CER DI:0.1UF,10%,25V	80009	283-5004-00
A12A1C741	283-5004-00			CAP,FXD,CER DI:0.1UF,10%,25V	80009	283-5004-00
A12A1C742	283-5004-00			CAP,FXD,CER DI:0.1UF,10%,25V	80009	283-5004-00
A12A1C744	283-5004-00			CAP,FXD,CER DI:0.1UF,10%,25V	80009	283-5004-00
A12A1C747	283-5004-00			CAP,FXD,CER DI:0.1UF,10%,25V	80009	283-5004-00
A12A1C760	283-5004-00			CAP,FXD,CER DI:0.1UF,10%,25V	80009	283-5004-00
A12A1C761	283-5004-00			CAP,FXD,CER DI:0.1UF,10%,25V	80009	283-5004-00
A12A1C770	283-5004-00			CAP,FXD,CER DI:0.1UF,10%,25V	80009	283-5004-00
A12A1C771	283-5004-00			CAP,FXD,CER DI:0.1UF,10%,25V	80009	283-5004-00
A12A1C773	283-5004-00			CAP,FXD,CER DI:0.1UF,10%,25V	80009	283-5004-00
A12A1C812	283-5001-00			CAP,FXD,CER DI:100PF,5%,50V	80009	283-5001-00
A12A1C824	283-5001-00			CAP,FXD,CER DI:100PF,5%,50V	80009	283-5001-00
A12A1C825	283-5001-00			CAP,FXD,CER DI:100PF,5%,50V	80009	283-5001-00
A12A1C826	283-5004-00			CAP,FXD,CER DI:0.1UF,10%,25V	80009	283-5004-00
A12A1C840	283-5001-00			CAP,FXD,CER DI:100PF,5%,50V	80009	283-5001-00
A12A1C851	283-5001-00			CAP,FXD,CER DI:100PF,5%,50V	80009	283-5001-00
A12A1C853	283-5001-00			CAP,FXD,CER DI:100PF,5%,50V	80009	283-5001-00
A12A1C860	283-5001-00			CAP,FXD,CER DI:100PF,5%,50V	80009	283-5001-00
A12A1C862	283-5001-00			CAP,FXD,CER DI:100PF,5%,50V	80009	283-5001-00
A12A1C864	283-5004-00			CAP,FXD,CER DI:0.1UF,10%,25V	80009	283-5004-00
A12A1C874	283-5004-00			CAP,FXD,CER DI:0.1UF,10%,25V	80009	283-5004-00
A12A1C914	283-5001-00			CAP,FXD,CER DI:100PF,5%,50V	80009	283-5001-00
A12A1C919	290-0963-00			CAP,FXD,ELCTLT:220UF,+50-20%,25WVDC	80009	290-0963-00
A12A1C920	283-5004-00			CAP,FXD,CER DI:0.1UF,10%,25V	80009	283-5004-00
A12A1C929	283-5004-00			CAP,FXD,CER DI:0.1UF,10%,25V	80009	283-5004-00
A12A1C930	283-5004-00			CAP,FXD,CER DI:0.1UF,10%,25V	80009	283-5004-00
A12A1C940	283-5001-00			CAP,FXD,CER DI:100PF,5%,50V	80009	283-5001-00
A12A1C941	283-5001-00			CAP,FXD,CER DI:100PF,5%,50V	80009	283-5001-00
A12A1C942	283-5004-00			CAP,FXD,CER DI:0.1UF,10%,25V	80009	283-5004-00
A12A1C943	283-5004-00			CAP,FXD,CER DI:0.1UF,10%,25V	80009	283-5004-00
A12A1C951	283-5001-00			CAP,FXD,CER DI:100PF,5%,50V	80009	283-5001-00
A12A1C953	283-5001-00			CAP,FXD,CER DI:100PF,5%,50V	80009	283-5001-00
A12A1C960	283-5004-00			CAP,FXD,CER DI:0.1UF,10%,25V	80009	283-5004-00
A12A1C961	283-5004-00			CAP,FXD,CER DI:0.1UF,10%,25V	80009	283-5004-00
A12A1C962	290-5002-00			CAP,FXD,ELCTLT:10UF,20V	TK1424	20MC100M-TER
A12A1C963	290-5002-00			CAP,FXD,ELCTLT:10UF,20V	TK1424	20MC100M-TER
A12A1C971	283-5014-00			CAP,FXD,CER DI:330PF,5%,50V	80009	283-5014-00
A12A1C973	283-5004-00			CAP,FXD,CER DI:0.1UF,10%,25V	80009	283-5004-00
A12A1C974	290-0963-00			CAP,FXD,ELCTLT:220UF,+50-20%,25WVDC	80009	290-0963-00
A12A1C975	283-5004-00			CAP,FXD,CER DI:0.1UF,10%,25V	80009	283-5004-00
A12A1C976	290-0963-00			CAP,FXD,ELCTLT:220UF,+50-20%,25WVDC	80009	290-0963-00
A12A1C980	290-0963-00			CAP,FXD,ELCTLT:220UF,+50-20%,25WVDC	80009	290-0963-00
A12A1C990	290-0963-00			CAP,FXD,ELCTLT:220UF,+50-20%,25WVDC	80009	290-0963-00
A12A1CR165	152-5004-00			DIODE,SIG:,ULTRA FAST;70V,0.15A,6NS,SER-PAI R;BAV99,SOT-23,8MM TR	25088	BAV99T
A12A1CR175	152-5000-00			SEMICOND DVC,DI:SW,SI,70V,COM CATHODE	80009	152-5000-00
A12A1CR639	152-0842-00			DIODE,SIG:SCHTKY,;COM-ANODE,20V,410MV,1.3PF ;HSMS-2812,SOT-23,T&R	04713	SRV-V-017
A12A1CR840	152-5004-00			DIODE,SIG:,ULTRA FAST;70V,0.15A,6NS,SER-PAI R;BAV99,SOT-23,8MM TR	25088	BAV99T
A12A1CR841	152-5004-00			DIODE,SIG:,ULTRA FAST;70V,0.15A,6NS,SER-PAI R;BAV99,SOT-23,8MM TR	25088	BAV99T
A12A1J110	131-0391-01			CONN,RF JACK:	80009	131-0391-01
A12A1J130	131-0391-01			CONN,RF JACK:	80009	131-0391-01
A12A1J140	131-0391-01			CONN,RF JACK:	80009	131-0391-01
A12A1J190	131-1425-00			CONN,HDR:PCB,;MALE,RTANG,1 X 36,0.1 CTR,0.2 30 MLG X 0.090 TAIL,30 GOLD,STACKABLE;,, (REPLACE AS SET WITH 131-1426-00)	22526	65521-136

Component No.	Tektronix Part No.	Serial/Assembly No. Effective	Dscont	Name & Description	Mfr. Code	Mfr. Part No.
A12A1J190	131-1426-00			CONN,HDR:PCB,;MALE,RTANG,1 X 36,0.1 CTR,0.2 3 MLG X 0.195 TAIL,GOLD,STACKABLE;,, (REPLACE AS SET WITH 131-1425-00)	22526	65524-136
A12A1J510	131-3774-00			CONN,HDR:PCB,;MALE,STR,2 X 36,0.1 CTR,0.230 MLG X 0.095 TAIL,30 GOLD;,,	22526	65610-172
A12A1J550	131-1857-00			CONN,HDR:PCB,;MALE,STR,1 X 36,0.1 CTR,0.230 MLG X 0.100 TAIL,GOLD;,,	58050	082-3644-SS10
A12A1L351	108-5009-00			COIL,RF:FXD,82UH, +/- 10 %, Q=50, SRF 10 MH Z, DCR 7.0 OHM	80009	108-5009-00
A12A1L451	108-5009-00			COIL,RF:FXD,82UH, +/- 10 %, Q=50, SRF 10 MH Z, DCR 7.0 OHM	80009	108-5009-00
A12A1L481	108-1420-00			COIL,RF:FXD, 300 UH, +/- 20 %, Q 100, DCR 0 .17 OHM, POT CORE	80009	108-1420-00
A12A1L490	108-1420-00			COIL,RF:FXD, 300 UH, +/- 20 %, Q 100, DCR 0 .17 OHM, POT CORE	80009	108-1420-00
A12A1L621	108-5021-00			COIL,RF:	80009	108-5021-00
A12A1L631	108-5023-00			COIL,RF:FXD,5.6UH,20%,Q=50, SRF 40 MHZ, DCR 1.1 OHM, I MAX	54583	NL453232T-5R6M
A12A1L720	108-5000-00			COIL,RF:	80009	108-5000-00
A12A1L732	108-5093-00			COIL,RF:	02113	1812LS-222 XKBA
A12A1L802	108-5009-00			COIL,RF:FXD,82UH, +/- 10 %, Q=50, SRF 10 MH Z, DCR 7.0 OHM	80009	108-5009-00
A12A1L814	108-5009-00			COIL,RF:FXD,82UH, +/- 10 %, Q=50, SRF 10 MH Z, DCR 7.0 OHM	80009	108-5009-00
A12A1L917	108-1262-00			COIL,RF:FXD,100UH,10%,Q=30,SRF 8.2MHZ,DCR 0 .23 OHM,I MAX 0.75ARADIAL LEAD	80009	108-1262-00
A12A1P11	131-3556-00			CONN,RCPT,ELEC:CARD CONN,2 X 12,HORIZ	22526	66527-012
A12A1Q170	151-5005-00			TRANSISTOR,SIG:BIPOLAR,PNP;20V,1.0A,60MHZ,A MPLIFIER;BCX69/BC869,SOT-89,12MM T/R	04713	BCX69T1
A12A1Q521	151-1127-00			TRANSISTOR,PWR:MOS,N-CH;60V,4.0A,0.6 OHM;IR F511,TO-220	81483	IRF511
A12A1Q630	151-5000-00			TRANSISTOR,SIG:BIPOLAR,PNP;40V,200MA,250MHZ ,AMPLIFIER;MMBT3906L,TO-236/SOT-23,8MM T&R	04713	MMBT3906LT1
A12A1Q631	151-5001-00			TRANSISTOR,SIG:BIPOLAR,NPN;40V,200MA,300MHZ ,AMPLIFIER;MMBT3904L,TO-236/SOT-23,8MM T&R	80009	151-5001-00
A12A1Q632	151-5000-00			TRANSISTOR,SIG:BIPOLAR,PNP;40V,200MA,250MHZ ,AMPLIFIER;MMBT3906L,TO-236/SOT-23,8MM T&R	04713	MMBT3906LT1
A12A1Q633	151-5001-00			TRANSISTOR,SIG:BIPOLAR,NPN;40V,200MA,300MHZ ,AMPLIFIER;MMBT3904L,TO-236/SOT-23,8MM T&R	80009	151-5001-00
A12A1Q652	151-5001-00			TRANSISTOR,SIG:BIPOLAR,NPN;40V,200MA,300MHZ ,AMPLIFIER;MMBT3904L,TO-236/SOT-23,8MM T&R	80009	151-5001-00
A12A1Q674	151-5001-00			TRANSISTOR,SIG:BIPOLAR,NPN;40V,200MA,300MHZ ,AMPLIFIER;MMBT3904L,TO-236/SOT-23,8MM T&R	80009	151-5001-00
A12A1Q703	151-5001-00			TRANSISTOR,SIG:BIPOLAR,NPN;40V,200MA,300MHZ ,AMPLIFIER;MMBT3904L,TO-236/SOT-23,8MM T&R	80009	151-5001-00
A12A1Q780	151-1127-00			TRANSISTOR,PWR:MOS,N-CH;60V,4.0A,0.6 OHM;IR F511,TO-220	81483	IRF511
A12A1Q781	151-1128-00			TRANSISTOR,PWR:MOS,P-CH;60V,6.0A,0.6 OHM;IR F9521,TO-220	80009	151-1128-00
A12A1Q800	151-5000-00			TRANSISTOR,SIG:BIPOLAR,PNP;40V,200MA,250MHZ ,AMPLIFIER;MMBT3906L,TO-236/SOT-23,8MM T&R	04713	MMBT3906LT1
A12A1Q880	151-1128-00			TRANSISTOR,PWR:MOS,P-CH;60V,6.0A,0.6 OHM;IR F9521,TO-220	80009	151-1128-00
A12A1Q881	151-1127-00			TRANSISTOR,PWR:MOS,N-CH;60V,4.0A,0.6 OHM;IR F511,TO-220	81483	IRF511
A12A1Q910	151-1063-00			TRANSISTOR,PWR:MOS,N-CH;60V,0.8A,0.8 OHM;IR FD113,DIP04.3	80009	151-1063-00
A12A1Q911	151-1063-00			TRANSISTOR,PWR:MOS,N-CH;60V,0.8A,0.8 OHM;IR FD113,DIP04.3	80009	151-1063-00

Component No.	Tektronix Part No.	Serial/Assembly No. Effective	Dscont	Name & Description	Mfr. Code	Mfr. Part No.
A12A1Q920	151-1121-00			TRANSISTOR,PWR:MOS,N-CH;60V,0.5A,3.0 OHM;VN 0106N3/VN0606L,TO-92 SGD	TK0768	VN0106N3
A12A1Q930	151-5001-00			TRANSISTOR,SIG:BIPOLAR,NPN;40V,200MA,300MHZ ,AMPLIFIER;MMBT3904L,TO-236/SOT-23,8MM T&R	80009	151-5001-00
A12A1Q931	151-5000-00			TRANSISTOR,SIG:BIPOLAR,PNP;40V,200MA,250MHZ ,AMPLIFIER;MMBT3906L,TO-236/SOT-23,8MM T&R	04713	MMBT3906LT1
A12A1R111	321-5015-00			RES,FXD:METAL FILM;562 OHM,1%,0.125W,TC=100 PPM;1206,T&R	80009	321-5015-00
A12A1R161	325-0315-00			RES,FXD,FILM:20K OHM,0.05%,0.3W	07088	K747 20KOHM .05%
A12A1R162	325-0411-00			RES,FXD,FILM:15.6K OHM,1%,0.3W,TC=3.1PPM	18612	S102C 15K600-1%
A12A1R164	321-5026-00			RES,FXD:METAL FILM;4.75K OHM,1%,0.125W,TC=1 00 PPM;1206,T&R	80009	321-5026-00
A12A1R171	321-0161-00			RES,FXD,FILM:464 OHM,1%,0.125W,TC=T0	07716	CEAD464R0F
A12A1R172	321-0816-07			RES,FXD,FILM:5K OHM,0.1%,0.125W,TC=T9	80009	321-0816-07
A12A1R173	321-0289-07			RES,FXD,FILM:10.0K OHM,0.1%,0.125W,TC=T9	80009	321-0289-07
A12A1R191	321-5018-00			RES,FXD:METAL FILM;1.0K OHM,1%,0.125W,TC=10 0 PPM;1206,T&R	80009	321-5018-00
A12A1R202	321-5016-00			RES,FXD:METAL FILM;681 OHM,1%,0.125W,TC=100 PPM;1206,T&R	01121	BCK6810FT
A12A1R203	321-5010-00			RES,FXD:METAL FILM;221 OHM,1%,0.125W,TC=100 PPM;1206,T&R	80009	321-5010-00
A12A1R204	321-5016-00			RES,FXD:METAL FILM;681 OHM,1%,0.125W,TC=100 PPM;1206,T&R	01121	BCK6810FT
A12A1R210	321-5000-00			RES,FXD:METAL FILM;10 OHM,1%,0.125W,TC=100 PPM;1206,T&R	57668	MCR18EZHFW10E
A12A1R212	321-5000-00			RES,FXD:METAL FILM;10 OHM,1%,0.125W,TC=100 PPM;1206,T&R	57668	MCR18EZHFW10E
A12A1R232	321-5006-00			RES,FXD:METAL FILM;100 OHM,1%,0.125W,TC=100 PPM;1206,T&R	80009	321-5006-00
A12A1R233	321-5006-00			RES,FXD:METAL FILM;100 OHM,1%,0.125W,TC=100 PPM;1206,T&R	80009	321-5006-00
A12A1R234	321-5018-00			RES,FXD:METAL FILM;1.0K OHM,1%,0.125W,TC=10 0 PPM;1206,T&R	80009	321-5018-00
A12A1R236	321-0239-07			RES,FXD,FILM:3.01K OHM,0.1%,0.125W,TC=T9MI	07716	CEAE30100B
A12A1R237	321-0272-07			RES,FXD,FILM:6.65K OHM,0.1%,0.125W,TC=T9	07716	CEAE66500B
A12A1R238	321-0228-09			RES,FXD,FILM:2.32K OHM,1%,0.125W,TC=T9	07716	CEAE23200F
A12A1R239	321-0753-06			RES,FXD,FILM:9K OHM,0.25%,0.125W,TC=T9	07716	CEAE90000C
A12A1R241	321-0306-09	B010100	B010247	RES,FXD,FILM:15.0K OHM,1%,0.125W,TC=T9	01121	ORDER BY DESCR
A12A1R241	325-0410-00	B010248		RES,FXD,FILM:14.3K OHM,1%,0.3W,TC=3.1PPM	18612	S102C 14K300-1%
A12A1R242	321-0306-09	B010100	B010247	RES,FXD,FILM:15.0K OHM,1%,0.125W,TC=T9	01121	ORDER BY DESCR
A12A1R242	325-0410-00	B010248		RES,FXD,FILM:14.3K OHM,1%,0.3W,TC=3.1PPM	18612	S102C 14K300-1%
A12A1R243	321-5045-00			RES,FXD:METAL FILM;68.1 OHM,1%,0.125W,TC=10 0 PPM;1206,T&R	80009	321-5045-00
A12A1R244	321-5045-00			RES,FXD:METAL FILM;68.1 OHM,1%,0.125W,TC=10 0 PPM;1206,T&R	80009	321-5045-00
A12A1R250	321-5016-00			RES,FXD:METAL FILM;681 OHM,1%,0.125W,TC=100 PPM;1206,T&R	01121	BCK6810FT
A12A1R253	321-5010-00			RES,FXD:METAL FILM;221 OHM,1%,0.125W,TC=100 PPM;1206,T&R	80009	321-5010-00
A12A1R254	321-5016-00			RES,FXD:METAL FILM;681 OHM,1%,0.125W,TC=100 PPM;1206,T&R	01121	BCK6810FT
A12A1R261	321-5035-00			RES,FXD:METAL FILM;27.4K OHM,1%,0.125W,TC=1 00 PPM;1206,T&R	80009	321-5035-00
A12A1R271	321-5047-00			RES,FXD:METAL FILM;100K OHM,1%,0.125W,TC=10 0 PPM;1206,T&R	80009	321-5047-00
A12A1R272	321-5018-00			RES,FXD:METAL FILM;1.0K OHM,1%,0.125W,TC=10 0 PPM;1206,T&R	80009	321-5018-00
A12A1R273	321-5030-00			RES,FXD:METAL FILM;10.0K OHM,1%,0.125W,TC=1 00 PPM;1206,T&R	80009	321-5030-00

Component No.	Tektronix Part No.	Serial/Assembly No. Effective	Dscont	Name & Description	Mfr. Code	Mfr. Part No.
A12A1R281	321-5006-00			RES,FXD:METAL FILM;100 OHM,1%,0.125W,TC=100 PPM;1206,T&R	80009	321-5006-00
A12A1R283	321-5018-00			RES,FXD:METAL FILM;1.0K OHM,1%,0.125W,TC=10 0 PPM;1206,T&R	80009	321-5018-00
A12A1R284	321-5023-00			RES,FXD:METAL FILM;2.74K OHM,1%,0.125W,TC=1 00 PPM;1206,T&R	80009	321-5023-00
A12A1R285	321-5025-00			RES,FXD:METAL FILM;3.92K OHM,1%,0.125W,TC=1 00 PPM;1206,T&R	80009	321-5025-00
A12A1R286	321-5006-00			RES,FXD:METAL FILM;100 OHM,1%,0.125W,TC=100 PPM;1206,T&R	80009	321-5006-00
A12A1R287	321-5024-00			RES,FXD:METAL FILM;3.32K OHM,1%,0.125W,TC=1 00 PPM;1206,T&R	80009	321-5024-00
A12A1R288	321-5027-00			RES,FXD:METAL FILM;5.62K OHM,1%,0.125W,TC=1 00 PPM;1206,T&R	80009	321-5027-00
A12A1R289	321-5006-00			RES,FXD:METAL FILM;100 OHM,1%,0.125W,TC=100 PPM;1206,T&R	80009	321-5006-00
A12A1R291	321-5018-00			RES,FXD:METAL FILM;1.0K OHM,1%,0.125W,TC=10 0 PPM;1206,T&R	80009	321-5018-00
A12A1R311	321-5045-00			RES,FXD:METAL FILM;68.1 OHM,1%,0.125W,TC=10 0 PPM;1206,T&R	80009	321-5045-00
A12A1R313	321-5045-00			RES,FXD:METAL FILM;68.1 OHM,1%,0.125W,TC=10 0 PPM;1206,T&R	80009	321-5045-00
A12A1R320	321-5006-00			RES,FXD:METAL FILM;100 OHM,1%,0.125W,TC=100 PPM;1206,T&R	80009	321-5006-00
A12A1R323	321-0924-07			RES,FXD,FILM:40K OHM,0.1%,0.125W,TC=T9	80009	321-0924-07
A12A1R324	321-0306-09			RES,FXD,FILM:15.0K OHM,1%,0.125W,TC=T9	01121	ORDER BY DESCR
A12A1R330	321-0193-07			RES,FXD,FILM:1K OHM,0.1%,0.125W,TC=T9	80009	321-0193-07
A12A1R331	321-1722-07			RES,FXD,FILM:3.39K OHM,0.1%,0.125W,TC=T9	19701	5033RE3K390B
A12A1R332	321-5006-00			RES,FXD:METAL FILM;100 OHM,1%,0.125W,TC=100 PPM;1206,T&R	80009	321-5006-00
A12A1R335	321-5006-00			RES,FXD:METAL FILM;100 OHM,1%,0.125W,TC=100 PPM;1206,T&R	80009	321-5006-00
A12A1R336	321-5006-00			RES,FXD:METAL FILM;100 OHM,1%,0.125W,TC=100 PPM;1206,T&R	80009	321-5006-00
A12A1R339	321-5006-00			RES,FXD:METAL FILM;100 OHM,1%,0.125W,TC=100 PPM;1206,T&R	80009	321-5006-00
A12A1R350	321-5000-00			RES,FXD:METAL FILM;10 OHM,1%,0.125W,TC=100 PPM;1206,T&R	57668	MCR18EZHFW10E
A12A1R362	321-5030-00			RES,FXD:METAL FILM;10.0K OHM,1%,0.125W,TC=1 00 PPM;1206,T&R	80009	321-5030-00
A12A1R371	321-5030-00			RES,FXD:METAL FILM;10.0K OHM,1%,0.125W,TC=1 00 PPM;1206,T&R	80009	321-5030-00
A12A1R373	321-5030-00			RES,FXD:METAL FILM;10.0K OHM,1%,0.125W,TC=1 00 PPM;1206,T&R	80009	321-5030-00
A12A1R375	321-5030-00			RES,FXD:METAL FILM;10.0K OHM,1%,0.125W,TC=1 00 PPM;1206,T&R	80009	321-5030-00
A12A1R380	321-5006-00			RES,FXD:METAL FILM;100 OHM,1%,0.125W,TC=100 PPM;1206,T&R	80009	321-5006-00
A12A1R381	321-5018-00			RES,FXD:METAL FILM;1.0K OHM,1%,0.125W,TC=10 0 PPM;1206,T&R	80009	321-5018-00
A12A1R382	321-5029-00			RES,FXD:METAL FILM;8.25K OHM,1%,0.125W,TC=1 00 PPM;1206,T&R	80009	321-5029-00
A12A1R383	321-5023-00			RES,FXD:METAL FILM;2.74K OHM,1%,0.125W,TC=1 00 PPM;1206,T&R	80009	321-5023-00
A12A1R384	321-5006-00			RES,FXD:METAL FILM;100 OHM,1%,0.125W,TC=100 PPM;1206,T&R	80009	321-5006-00
A12A1R385	321-5018-00			RES,FXD:METAL FILM;1.0K OHM,1%,0.125W,TC=10 0 PPM;1206,T&R	80009	321-5018-00

Component No.	Tektronix Part No.	Serial/Assembly No. Effective	Dscont	Name & Description	Mfr. Code	Mfr. Part No.
A12A1R386	321-5018-00			RES,FXD:METAL FILM;1.0K OHM,1%,0.125W,TC=100 PPM;1206,T&R	80009	321-5018-00
A12A1R387	321-5006-00			RES,FXD:METAL FILM;100 OHM,1%,0.125W,TC=100 PPM;1206,T&R	80009	321-5006-00
A12A1R430	321-0222-09			RES,FXD,FILM:2.00K OHM,1,0.125W,TC=T9	07716	CEAE20000F
A12A1R431	321-0222-09			RES,FXD,FILM:2.00K OHM,1,0.125W,TC=T9	07716	CEAE20000F
A12A1R440	321-0289-07			RES,FXD,FILM:10.0K OHM,0.1%,0.125W,TC=T9	80009	321-0289-07
A12A1R441	321-0289-07			RES,FXD,FILM:10.0K OHM,0.1%,0.125W,TC=T9	80009	321-0289-07
A12A1R444	321-0193-07			RES,FXD,FILM:1K OHM,0.1%,0.125W,TC=T9	80009	321-0193-07
A12A1R446	321-5042-00			RES,FXD:METAL FILM;39.2 OHM,1%,0.125W,TC=100 PPM;1206,T&R	80009	321-5042-00
A12A1R450	321-5000-00			RES,FXD:METAL FILM;10 OHM,1%,0.125W,TC=100 PPM;1206,T&R	57668	MCR18EZHFW10E
A12A1R453	321-5042-00			RES,FXD:METAL FILM;39.2 OHM,1%,0.125W,TC=100 PPM;1206,T&R	80009	321-5042-00
A12A1R472	321-5030-00			RES,FXD:METAL FILM;10.0K OHM,1%,0.125W,TC=100 PPM;1206,T&R	80009	321-5030-00
A12A1R473	321-5030-00			RES,FXD:METAL FILM;10.0K OHM,1%,0.125W,TC=100 PPM;1206,T&R	80009	321-5030-00
A12A1R474	321-5044-00			RES,FXD:METAL FILM;56.2 OHM,1%,0.125W,TC=100 PPM;1206,T&R	01121	BCD56R2FT
A12A1R475	321-5044-00			RES,FXD:METAL FILM;56.2 OHM,1%,0.125W,TC=100 PPM;1206,T&R	01121	BCD56R2FT
A12A1R476	321-5030-00			RES,FXD:METAL FILM;10.0K OHM,1%,0.125W,TC=100 PPM;1206,T&R	80009	321-5030-00
A12A1R477	321-5006-00			RES,FXD:METAL FILM;100 OHM,1%,0.125W,TC=100 PPM;1206,T&R	80009	321-5006-00
A12A1R478	321-5030-00			RES,FXD:METAL FILM;10.0K OHM,1%,0.125W,TC=100 PPM;1206,T&R	80009	321-5030-00
A12A1R482	321-5006-00			RES,FXD:METAL FILM;100 OHM,1%,0.125W,TC=100 PPM;1206,T&R	80009	321-5006-00
A12A1R484	321-5004-00			RES,FXD:METAL FILM;22.1 OHM,1%,0.125W,TC=100 PPM;1206,T&R	80009	321-5004-00
A12A1R485	321-5004-00			RES,FXD:METAL FILM;22.1 OHM,1%,0.125W,TC=100 PPM;1206,T&R	80009	321-5004-00
A12A1R486	321-5004-00			RES,FXD:METAL FILM;22.1 OHM,1%,0.125W,TC=100 PPM;1206,T&R	80009	321-5004-00
A12A1R487	321-5000-00			RES,FXD:METAL FILM;10 OHM,1%,0.125W,TC=100 PPM;1206,T&R	57668	MCR18EZHFW10E
A12A1R491	321-5000-00			RES,FXD:METAL FILM;10 OHM,1%,0.125W,TC=100 PPM;1206,T&R	57668	MCR18EZHFW10E
A12A1R530	321-5048-00			RES,FXD:METAL FILM;332K OHM,1%,0.125W,TC=100 PPM;1206,T&R	80009	321-5048-00
A12A1R541	321-5023-00			RES,FXD:METAL FILM;2.74K OHM,1%,0.125W,TC=100 PPM;1206,T&R	80009	321-5023-00
A12A1R542	321-5030-00			RES,FXD:METAL FILM;10.0K OHM,1%,0.125W,TC=100 PPM;1206,T&R	80009	321-5030-00
A12A1R543	321-5020-00			RES,FXD:METAL FILM;1.5K OHM,1%,0.125W,TC=100 PPM;1206,T&R	80009	321-5020-00
A12A1R545	321-5032-00			RES,FXD:METAL FILM;15.0K OHM,1%,0.125W,TC=100 PPM;1206,T&R	80009	321-5032-00
A12A1R546	321-5041-00			RES,FXD:METAL FILM;82.5K OHM,1%,0.125W,TC=100 PPM;1206,T&R	80009	321-5041-00
A12A1R547	321-5027-00			RES,FXD:METAL FILM;5.62K OHM,1%,0.125W,TC=100 PPM;1206,T&R	80009	321-5027-00
A12A1R551	321-5000-00			RES,FXD:METAL FILM;10 OHM,1%,0.125W,TC=100 PPM;1206,T&R	57668	MCR18EZHFW10E
A12A1R552	321-5042-00			RES,FXD:METAL FILM;39.2 OHM,1%,0.125W,TC=100 PPM;1206,T&R	80009	321-5042-00

Component No.	Tektronix Part No.	Serial/Assembly No. Effective	Dscont	Name & Description	Mfr. Code	Mfr. Part No.
A12A1R561	321-5025-00			RES,FXD:METAL FILM;3.92K OHM,1%,0.125W,TC=100 PPM;1206,T&R	80009	321-5025-00
A12A1R563	321-5032-00			RES,FXD:METAL FILM;15.0K OHM,1%,0.125W,TC=100 PPM;1206,T&R	80009	321-5032-00
A12A1R564	321-5025-00			RES,FXD:METAL FILM;3.92K OHM,1%,0.125W,TC=100 PPM;1206,T&R	80009	321-5025-00
A12A1R566	321-5032-00			RES,FXD:METAL FILM;15.0K OHM,1%,0.125W,TC=100 PPM;1206,T&R	80009	321-5032-00
A12A1R568	321-5006-00			RES,FXD:METAL FILM;100 OHM,1%,0.125W,TC=100 PPM;1206,T&R	80009	321-5006-00
A12A1R569	321-5006-00			RES,FXD:METAL FILM;100 OHM,1%,0.125W,TC=100 PPM;1206,T&R	80009	321-5006-00
A12A1R571	321-5047-00			RES,FXD:METAL FILM;100K OHM,1%,0.125W,TC=100 PPM;1206,T&R	80009	321-5047-00
A12A1R572	321-5018-00			RES,FXD:METAL FILM;1.0K OHM,1%,0.125W,TC=100 PPM;1206,T&R	80009	321-5018-00
A12A1R573	321-5047-00			RES,FXD:METAL FILM;100K OHM,1%,0.125W,TC=100 PPM;1206,T&R	80009	321-5047-00
A12A1R574	321-5018-00			RES,FXD:METAL FILM;1.0K OHM,1%,0.125W,TC=100 PPM;1206,T&R	80009	321-5018-00
A12A1R575	321-5004-00			RES,FXD:METAL FILM;22.1 OHM,1%,0.125W,TC=100 PPM;1206,T&R	80009	321-5004-00
A12A1R576	321-5030-00			RES,FXD:METAL FILM;10.0K OHM,1%,0.125W,TC=100 PPM;1206,T&R	80009	321-5030-00
A12A1R600	321-5045-00			RES,FXD:METAL FILM;68.1 OHM,1%,0.125W,TC=100 PPM;1206,T&R	80009	321-5045-00
A12A1R601	321-5045-00			RES,FXD:METAL FILM;68.1 OHM,1%,0.125W,TC=100 PPM;1206,T&R	80009	321-5045-00
A12A1R602	321-5027-00			RES,FXD:METAL FILM;5.62K OHM,1%,0.125W,TC=100 PPM;1206,T&R	80009	321-5027-00
A12A1R603	321-5022-00			RES,FXD:METAL FILM;2.21K OHM,1%,0.125W,TC=100 PPM;1206,T&R	80009	321-5022-00
A12A1R604	321-5015-00			RES,FXD:METAL FILM;562 OHM,1%,0.125W,TC=100 PPM;1206,T&R	80009	321-5015-00
A12A1R610	321-5024-00			RES,FXD:METAL FILM;3.32K OHM,1%,0.125W,TC=100 PPM;1206,T&R	80009	321-5024-00
A12A1R613	321-5003-00			RES,FXD:METAL FILM;18.2 OHM,1%,0.125W,TC=100 PPM;1206,T&R	57668	MCR18EZHFW 18E2
A12A1R615	321-5015-00			RES,FXD:METAL FILM;562 OHM,1%,0.125W,TC=100 PPM;1206,T&R	80009	321-5015-00
A12A1R617	321-5050-00			RES,FXD:METAL FILM;33.2 OHM,1%,0.125W,TC=100 PPM;1206,T&R	57668	MCR18FWEA33E2
A12A1R620	311-2275-00			RES,VAR,NONWW:TRMR,200 OHM,20%,0.5W	80009	311-2275-00
A12A1R622	321-5017-00			RES,FXD:METAL FILM;825 OHM,1%,0.125W,TC=100 PPM;1206,T&R	80009	321-5017-00
A12A1R624	321-5022-00			RES,FXD:METAL FILM;2.21K OHM,1%,0.125W,TC=100 PPM;1206,T&R	80009	321-5022-00
A12A1R632	321-5010-00			RES,FXD:METAL FILM;221 OHM,1%,0.125W,TC=100 PPM;1206,T&R	80009	321-5010-00
A12A1R633	321-5019-00			RES,FXD:METAL FILM;1.21K OHM,1%,0.125W,TC=100 PPM;1206,T&R	80009	321-5019-00
A12A1R634	321-5025-00			RES,FXD:METAL FILM;3.92K OHM,1%,0.125W,TC=100 PPM;1206,T&R	80009	321-5025-00
A12A1R636	321-5010-00			RES,FXD:METAL FILM;221 OHM,1%,0.125W,TC=100 PPM;1206,T&R	80009	321-5010-00
A12A1R637	321-5022-00			RES,FXD:METAL FILM;2.21K OHM,1%,0.125W,TC=100 PPM;1206,T&R	80009	321-5022-00
A12A1R638	321-5004-00			RES,FXD:METAL FILM;22.1 OHM,1%,0.125W,TC=100 PPM;1206,T&R	80009	321-5004-00

Component No.	Tektronix Part No.	Serial/Assembly No. Effective	Dscont	Name & Description	Mfr. Code	Mfr. Part No.
A12A1R640	321-5018-00			RES,FXD:METAL FILM;1.0K OHM,1%,0.125W,TC=100 PPM;1206,T&R	80009	321-5018-00
A12A1R641	321-5018-00			RES,FXD:METAL FILM;1.0K OHM,1%,0.125W,TC=100 PPM;1206,T&R	80009	321-5018-00
A12A1R642	321-5021-00			RES,FXD:METAL FILM;1.82K OHM,1%,0.125W,TC=100 PPM;1206,T&R	80009	321-5021-00
A12A1R643	321-5026-00			RES,FXD:METAL FILM;4.75K OHM,1%,0.125W,TC=100 PPM;1206,T&R	80009	321-5026-00
A12A1R644	321-5024-00			RES,FXD:METAL FILM;3.32K OHM,1%,0.125W,TC=100 PPM;1206,T&R	80009	321-5024-00
A12A1R645	321-5038-00			RES,FXD:METAL FILM;47.5K OHM,1%,0.125W,TC=100 PPM;1206,T&R	80009	321-5038-00
A12A1R651	321-5024-00			RES,FXD:METAL FILM;3.32K OHM,1%,0.125W,TC=100 PPM;1206,T&R	80009	321-5024-00
A12A1R653	321-5038-00			RES,FXD:METAL FILM;47.5K OHM,1%,0.125W,TC=100 PPM;1206,T&R	80009	321-5038-00
A12A1R654	321-5021-00			RES,FXD:METAL FILM;1.82K OHM,1%,0.125W,TC=100 PPM;1206,T&R	80009	321-5021-00
A12A1R655	321-5026-00			RES,FXD:METAL FILM;4.75K OHM,1%,0.125W,TC=100 PPM;1206,T&R	80009	321-5026-00
A12A1R656	321-5030-00			RES,FXD:METAL FILM;10.0K OHM,1%,0.125W,TC=100 PPM;1206,T&R	80009	321-5030-00
A12A1R657	321-5030-00			RES,FXD:METAL FILM;10.0K OHM,1%,0.125W,TC=100 PPM;1206,T&R	80009	321-5030-00
A12A1R670	321-5043-00			RES,FXD:METAL FILM;47.5 OHM,1%,0.125W,TC=100 PPM;1206,T&R	80009	321-5043-00
A12A1R673	321-5045-00			RES,FXD:METAL FILM;68.1 OHM,1%,0.125W,TC=100 PPM;1206,T&R	80009	321-5045-00
A12A1R701	321-5038-00			RES,FXD:METAL FILM;47.5K OHM,1%,0.125W,TC=100 PPM;1206,T&R	80009	321-5038-00
A12A1R702	321-5032-00			RES,FXD:METAL FILM;15.0K OHM,1%,0.125W,TC=100 PPM;1206,T&R	80009	321-5032-00
A12A1R709	321-1542-00			RES,FXD,FILM:4.37M OHM,1.0%,0.125W,TC=TO	07716	
A12A1R710	321-5044-00			RES,FXD:METAL FILM;56.2 OHM,1%,0.125W,TC=100 PPM;1206,T&R	01121	BCD56R2FT
A12A1R711	321-5022-00			RES,FXD:METAL FILM;2.21K OHM,1%,0.125W,TC=100 PPM;1206,T&R	80009	321-5022-00
A12A1R712	321-5051-00			RES,FXD:METAL FILM;0 OHM,1%,0.125W,TC=100 PPM;1206,T&R	80009	321-5051-00
A12A1R713	321-5045-00			RES,FXD:METAL FILM;68.1 OHM,1%,0.125W,TC=100 PPM;1206,T&R	80009	321-5045-00
A12A1R714	321-5015-00			RES,FXD:METAL FILM;562 OHM,1%,0.125W,TC=100 PPM;1206,T&R	80009	321-5015-00
A12A1R716	321-5047-00			RES,FXD:METAL FILM;100K OHM,1%,0.125W,TC=100 PPM;1206,T&R	80009	321-5047-00
A12A1R718	321-5027-00			RES,FXD:METAL FILM;5.62K OHM,1%,0.125W,TC=100 PPM;1206,T&R	80009	321-5027-00
A12A1R719	321-5050-00			RES,FXD:METAL FILM;33.2 OHM,1%,0.125W,TC=100 PPM;1206,T&R	57668	MCR18FWEA33E2
A12A1R725	321-5044-00			RES,FXD:METAL FILM;56.2 OHM,1%,0.125W,TC=100 PPM;1206,T&R	01121	BCD56R2FT
A12A1R727	321-5044-00			RES,FXD:METAL FILM;56.2 OHM,1%,0.125W,TC=100 PPM;1206,T&R	01121	BCD56R2FT
A12A1R730	321-5010-00			RES,FXD:METAL FILM;221 OHM,1%,0.125W,TC=100 PPM;1206,T&R	80009	321-5010-00
A12A1R734	321-5045-00			RES,FXD:METAL FILM;68.1 OHM,1%,0.125W,TC=100 PPM;1206,T&R	80009	321-5045-00
A12A1R736	321-5044-00			RES,FXD:METAL FILM;56.2 OHM,1%,0.125W,TC=100 PPM;1206,T&R	01121	BCD56R2FT

Component No.	Tektronix Part No.	Serial/Assembly No. Effective	Dscont	Name & Description	Mfr. Code	Mfr. Part No.
A12A1R745	321-5047-00			RES,FXD:METAL FILM;100K OHM,1%,0.125W,TC=100 PPM;1206,T&R	80009	321-5047-00
A12A1R746	311-2168-00			RES,VAR,NONWW:10K OHM,10%,0.5W,20 TURN TRIMMER,METAL FOIL	80009	311-2168-00
A12A1R750	321-5047-00			RES,FXD:METAL FILM;100K OHM,1%,0.125W,TC=100 PPM;1206,T&R	80009	321-5047-00
A12A1R751	321-5047-00			RES,FXD:METAL FILM;100K OHM,1%,0.125W,TC=100 PPM;1206,T&R	80009	321-5047-00
A12A1R752	321-5031-00			RES,FXD:METAL FILM;12.1K OHM,1%,0.125W,TC=100 PPM;1206,T&R	80009	321-5031-00
A12A1R753	321-5047-00			RES,FXD:METAL FILM;100K OHM,1%,0.125W,TC=100 PPM;1206,T&R	80009	321-5047-00
A12A1R754	321-5030-00			RES,FXD:METAL FILM;10.0K OHM,1%,0.125W,TC=100 PPM;1206,T&R	80009	321-5030-00
A12A1R755	321-5015-00			RES,FXD:METAL FILM;562 OHM,1%,0.125W,TC=100 PPM;1206,T&R	80009	321-5015-00
A12A1R756	321-5047-00			RES,FXD:METAL FILM;100K OHM,1%,0.125W,TC=100 PPM;1206,T&R	80009	321-5047-00
A12A1R772	321-5030-00			RES,FXD:METAL FILM;10.0K OHM,1%,0.125W,TC=100 PPM;1206,T&R	80009	321-5030-00
A12A1R801	321-5030-00			RES,FXD:METAL FILM;10.0K OHM,1%,0.125W,TC=100 PPM;1206,T&R	80009	321-5030-00
A12A1R812	321-5037-00			RES,FXD:METAL FILM;39.2K OHM,1%,0.125W,TC=100 PPM;1206,T&R	80009	321-5037-00
A12A1R813	321-5018-00			RES,FXD:METAL FILM;1.0K OHM,1%,0.125W,TC=100 PPM;1206,T&R	80009	321-5018-00
A12A1R815	321-0822-06			RES,FXD,FILM:1.76K OHM,0.25%,0.125W,TC=T9	80009	321-0822-06
A12A1R816	321-1228-07			RES,FXD,FILM:2.34K OHM,0.1%,0.125W,TC=T9	07716	
A12A1R820	321-0361-06			RES,FXD,FILM:56.2K OHM,0.25%,0.125W	80009	321-0361-06
A12A1R821	321-0641-07			RES,FXD,FILM:1.8K OHM,0.1,0.125W,TC=T9	07716	CEAE 18000B
A12A1R822	321-0926-07			RES,FXD,FILM:4K OHM,0.1%,0.125W,TC=T9	19701	5033RE4K00B
A12A1R823	321-5006-00			RES,FXD:METAL FILM;100 OHM,1%,0.125W,TC=100 PPM;1206,T&R	80009	321-5006-00
A12A1R827	311-1245-00			RES,VAR,NONWW:TRMR,10K OHM,0.5W	80009	311-1245-00
A12A1R828	321-5043-00			RES,FXD:METAL FILM;47.5 OHM,1%,0.125W,TC=100 PPM;1206,T&R	80009	321-5043-00
A12A1R832	321-5030-00			RES,FXD:METAL FILM;10.0K OHM,1%,0.125W,TC=100 PPM;1206,T&R	80009	321-5030-00
A12A1R833	321-5030-00			RES,FXD:METAL FILM;10.0K OHM,1%,0.125W,TC=100 PPM;1206,T&R	80009	321-5030-00
A12A1R840	321-5022-00			RES,FXD:METAL FILM;2.21K OHM,1%,0.125W,TC=100 PPM;1206,T&R	80009	321-5022-00
A12A1R841	321-5022-00			RES,FXD:METAL FILM;2.21K OHM,1%,0.125W,TC=100 PPM;1206,T&R	80009	321-5022-00
A12A1R842	321-5022-00			RES,FXD:METAL FILM;2.21K OHM,1%,0.125W,TC=100 PPM;1206,T&R	80009	321-5022-00
A12A1R843	321-5022-00			RES,FXD:METAL FILM;2.21K OHM,1%,0.125W,TC=100 PPM;1206,T&R	80009	321-5022-00
A12A1R844	321-5042-00			RES,FXD:METAL FILM;39.2 OHM,1%,0.125W,TC=100 PPM;1206,T&R	80009	321-5042-00
A12A1R845	321-5042-00			RES,FXD:METAL FILM;39.2 OHM,1%,0.125W,TC=100 PPM;1206,T&R	80009	321-5042-00
A12A1R846	321-5045-00			RES,FXD:METAL FILM;68.1 OHM,1%,0.125W,TC=100 PPM;1206,T&R	80009	321-5045-00
A12A1R847	321-5045-00			RES,FXD:METAL FILM;68.1 OHM,1%,0.125W,TC=100 PPM;1206,T&R	80009	321-5045-00
A12A1R848	321-5019-00			RES,FXD:METAL FILM;1.21K OHM,1%,0.125W,TC=100 PPM;1206,T&R	80009	321-5019-00

Component No.	Tektronix Part No.	Serial/Assembly No. Effective	Dscont	Name & Description	Mfr. Code	Mfr. Part No.
A12A1R861	321-5035-00			RES,FXD:METAL FILM;27.4K OHM,1%,0.125W,TC=100 PPM;1206,T&R	80009	321-5035-00
A12A1R863	321-5035-00			RES,FXD:METAL FILM;27.4K OHM,1%,0.125W,TC=100 PPM;1206,T&R	80009	321-5035-00
A12A1R870	321-5024-00			RES,FXD:METAL FILM;3.32K OHM,1%,0.125W,TC=100 PPM;1206,T&R	80009	321-5024-00
A12A1R871	321-5024-00			RES,FXD:METAL FILM;3.32K OHM,1%,0.125W,TC=100 PPM;1206,T&R	80009	321-5024-00
A12A1R872	321-5030-00			RES,FXD:METAL FILM;10.0K OHM,1%,0.125W,TC=100 PPM;1206,T&R	80009	321-5030-00
A12A1R873	321-5030-00			RES,FXD:METAL FILM;10.0K OHM,1%,0.125W,TC=100 PPM;1206,T&R	80009	321-5030-00
A12A1R875	321-5030-00			RES,FXD:METAL FILM;10.0K OHM,1%,0.125W,TC=100 PPM;1206,T&R	80009	321-5030-00
A12A1R900	325-0413-00			RES,FXD,FILM:13 OHM,1%,2W,TC=3.1PPM	18612	S106D 13R000-1%
A12A1R901	321-5047-00			RES,FXD:METAL FILM;100K OHM,1%,0.125W,TC=100 PPM;1206,T&R	80009	321-5047-00
A12A1R903	321-5047-00			RES,FXD:METAL FILM;100K OHM,1%,0.125W,TC=100 PPM;1206,T&R	80009	321-5047-00
A12A1R904	321-5047-00			RES,FXD:METAL FILM;100K OHM,1%,0.125W,TC=100 PPM;1206,T&R	80009	321-5047-00
A12A1R905	308-0142-00			RES,FXD,WW:30 OHM,5%,3W	07088	
A12A1R912	321-0926-07			RES,FXD,FILM:4K OHM,0.1%,0.125W,TC=T9	19701	5033RE4K00B
A12A1R913	321-0222-09			RES,FXD,FILM:2.00K OHM,1,0.125W,TC=T9	07716	CEAE20000F
A12A1R915	321-5006-00			RES,FXD:METAL FILM;100 OHM,1%,0.125W,TC=100 PPM;1206,T&R	80009	321-5006-00
A12A1R916	321-5006-00			RES,FXD:METAL FILM;100 OHM,1%,0.125W,TC=100 PPM;1206,T&R	80009	321-5006-00
A12A1R917	321-0481-00			RES,FXD,FILM:1M OHM,1%,0.125W,TC=T0	80009	321-0481-00
A12A1R918	311-1245-00			RES,VAR,NONWW:TRMR,10K OHM,0.5W	80009	311-1245-00
A12A1R920	311-1245-00			RES,VAR,NONWW:TRMR,10K OHM,0.5W	80009	311-1245-00
A12A1R921	321-0926-07			RES,FXD,FILM:4K OHM,0.1%,0.125W,TC=T9	19701	5033RE4K00B
A12A1R922	325-0410-00			RES,FXD,FILM:14.3K OHM,1%,0.3W,TC=3.1PPM	18612	S102C 14K300-1%
A12A1R923	325-0414-00			RES,FXD,FILM:3.2K OHM,1%,0.3W,TC=3.1PPM	18612	S102C 3K200-1%
A12A1R924	321-0926-07			RES,FXD,FILM:4K OHM,0.1%,0.125W,TC=T9	19701	5033RE4K00B
A12A1R925	321-0278-07			RES,FXD,FILM:7.68K OHM,0.1%,0.125W,TC=T9	57027	RC55-D-7K68-B-R
A12A1R926	325-0412-00			RES,FXD,FILM:1.5K OHM,1%,0.3W,TC=3.1PPM	18612	S102C 1K500-1%
A12A1R927	321-5045-00			RES,FXD:METAL FILM;68.1 OHM,1%,0.125W,TC=100 PPM;1206,T&R	80009	321-5045-00
A12A1R928	321-5045-00			RES,FXD:METAL FILM;68.1 OHM,1%,0.125W,TC=100 PPM;1206,T&R	80009	321-5045-00
A12A1R929	321-5048-00			RES,FXD:METAL FILM;332K OHM,1%,0.125W,TC=100 PPM;1206,T&R	80009	321-5048-00
A12A1R930	321-5030-00			RES,FXD:METAL FILM;10.0K OHM,1%,0.125W,TC=100 PPM;1206,T&R	80009	321-5030-00
A12A1R931	311-2168-00			RES,VAR,NONWW:10K OHM,10%,0.5W,20 TURN TRIMMER,METAL FOIL	80009	311-2168-00
A12A1R932	321-5027-00			RES,FXD:METAL FILM;5.62K OHM,1%,0.125W,TC=100 PPM;1206,T&R	80009	321-5027-00
A12A1R933	321-5015-00			RES,FXD:METAL FILM;562 OHM,1%,0.125W,TC=100 PPM;1206,T&R	80009	321-5015-00
A12A1R934	321-5043-00			RES,FXD:METAL FILM;47.5 OHM,1%,0.125W,TC=100 PPM;1206,T&R	80009	321-5043-00
A12A1R935	321-5002-00			RES,FXD:METAL FILM;15 OHM,1%,0.125W,TC=100 PPM;1206,T&R	57668	MCR18EZHFW 15E0
A12A1R936	321-5035-00			RES,FXD:METAL FILM;27.4K OHM,1%,0.125W,TC=100 PPM;1206,T&R	80009	321-5035-00
A12A1R937	321-5037-00			RES,FXD:METAL FILM;39.2K OHM,1%,0.125W,TC=100 PPM;1206,T&R	80009	321-5037-00

Component No.	Tektronix Part No.	Serial/Assembly No. Effective	Dscont	Name & Description	Mfr. Code	Mfr. Part No.
A12A1R938	321-5038-00			RES,FXD:METAL FILM;47.5K OHM,1%,0.125W,TC=100 PPM;1206,T&R	80009	321-5038-00
A12A1R939	321-5034-00			RES,FXD:METAL FILM;22.1K OHM,1%,0.125W,TC=100 PPM;1206,T&R	80009	321-5034-00
A12A1R940	321-0816-07			RES,FXD,FILM:5K OHM,0.1%,0.125W,TC=T9	80009	321-0816-07
A12A1R941	321-5042-00			RES,FXD:METAL FILM;39.2 OHM,1%,0.125W,TC=100 PPM;1206,T&R	80009	321-5042-00
A12A1R942	321-5006-00			RES,FXD:METAL FILM;100 OHM,1%,0.125W,TC=100 PPM;1206,T&R	80009	321-5006-00
A12A1R943	321-5006-00			RES,FXD:METAL FILM;100 OHM,1%,0.125W,TC=100 PPM;1206,T&R	80009	321-5006-00
A12A1R944	321-5047-00			RES,FXD:METAL FILM;100K OHM,1%,0.125W,TC=100 PPM;1206,T&R	80009	321-5047-00
A12A1R945	321-5049-00			RES,FXD:METAL FILM;1M OHM,1%,0.125W,TC=100 PPM;1206,T&R	80009	321-5049-00
A12A1R946	321-5014-00			RES,FXD:METAL FILM;475 OHM,1%,0.125W,TC=100 PPM;1206,T&R	80009	321-5014-00
A12A1R947	321-5009-00			RES,FXD:METAL FILM;182 OHM,1%,0.125W,TC=100 PPM;1206,T&R	80009	321-5009-00
A12A1R948	321-5014-00			RES,FXD:METAL FILM;475 OHM,1%,0.125W,TC=100 PPM;1206,T&R	80009	321-5014-00
A12A1R970	321-5030-00			RES,FXD:METAL FILM;10.0K OHM,1%,0.125W,TC=100 PPM;1206,T&R	80009	321-5030-00
A12A1R972	321-5030-00			RES,FXD:METAL FILM;10.0K OHM,1%,0.125W,TC=100 PPM;1206,T&R	80009	321-5030-00
A12A1R977	321-5030-00			RES,FXD:METAL FILM;10.0K OHM,1%,0.125W,TC=100 PPM;1206,T&R	80009	321-5030-00
A12A1R995	321-5018-00			RES,FXD:METAL FILM;1.0K OHM,1%,0.125W,TC=100 PPM;1206,T&R	80009	321-5018-00
A12A1R996	321-5047-00			RES,FXD:METAL FILM;100K OHM,1%,0.125W,TC=100 PPM;1206,T&R	80009	321-5047-00
A12A1U166	156-5082-01			IC,LINEAR:BIPOLAR,OP-AMP;LOW OFFSET;OP07CD, SO8.150,16MM T&R	80009	156-5082-01
A12A1U174	156-5082-01			IC,LINEAR:BIPOLAR,OP-AMP;LOW OFFSET;OP07CD, SO8.150,16MM T&R	80009	156-5082-01
A12A1U260	156-5155-00			IC,DIGITAL:HCMOS,GATE;HEX INV;74HC04,SO14.150,TUBE	80009	156-5155-00
A12A1U270	156-5154-00			IC,DIGITAL:HCMOS,GATE;QUAD 2-INPUT NAND, OD ;74HC03,SO14.150,TUBE	80009	156-5154-00
A12A1U274	156-5142-00			IC,DIGITAL:HCTCMOS,DEMUX/DECODER;DUAL 2-TO-4 DECODER;74HCT139,SO16.150,TUBE	80009	156-5142-00
A12A1U282	156-5018-00			IC,LINEAR:BIPOLAR,OP-AMP;DUAL,SINGLE SUPPLY ;LM358D,SO8.150,TUBE	80009	156-5018-00
A12A1U360	156-5615-00			IC,DIGITAL:HCMOS,GATE;QUAD 2-INPUT XNOR;74HC7266,SO14.150,TUBE	80009	156-5615-00
A12A1U361	156-5021-01			IC,DIGITAL:CMOS,REGISTER;8-STAGE SHIFT/STORAGE, 3-STATE;4094,SO16.150,16MM T&R	80009	156-5021-01
A12A1U370	156-5080-00			IC,DIGITAL:CMOS,REGISTER;8-STAGE STATIC SHIFT REGISTER;4021B,SO16.150,TUBE	80009	156-5080-00
A12A1U372	156-5227-00			IC,DIGITAL:HCMOS,MULTIVIBRATOR;DUAL RETRIG MONOSTABLE, WITH RESET;74HC123,SO16.150	80009	156-5227-00
A12A1U380	156-5018-00			IC,LINEAR:BIPOLAR,OP-AMP;DUAL,SINGLE SUPPLY ;LM358D,SO8.150,TUBE	80009	156-5018-00
A12A1U460	156-5021-01			IC,DIGITAL:CMOS,REGISTER;8-STAGE SHIFT/STORAGE, 3-STATE;4094,SO16.150,16MM T&R	80009	156-5021-01
A12A1U470	156-5297-00			IC,LINEAR:BIPOLAR,VOLTAGE REGULATOR;ADJUSTABLE,SHUNT,100MA,2%;TL431CD,SO8.150,TUBE	80009	156-5297-00
A12A1U471	156-5074-00			IC,DIGITAL:HCMOS,FLIP FLOP;DUAL D-TYPE;74HC74,SO14.150,TUBE	80009	156-5074-00

Component No.	Tektronix Part No.	Serial/Assembly No. Effective	Dscont	Name & Description	Mfr. Code	Mfr. Part No.
A12A1U544	156-5017-01			IC,LINEAR:BIPOLAR,OP-AMP;DUAL;MC1458D,SO8.150,12MM T/R	80009	156-5017-01
A12A1U560	156-5021-01			IC,DIGITAL:CMOS,REGISTER;8-STAGE SHIFT/STORAGE, 3-STATE;4094,SO16.150,16MM T&R	80009	156-5021-01
A12A1U565	156-5082-01			IC,LINEAR:BIPOLAR,OP-AMP;LOW OFFSET;OP07CD, SO8.150,16MM T&R	80009	156-5082-01
A12A1U570	156-5278-00			IC,DIGITAL:HCCMOS,BUFFER/DRIVER;QUAD, LINE DRIVER, 3-STATE;74HC125,SO14.150,TUBE	80009	156-5278-00
A12A1U606	156-5690-00			IC,LINEAR:BIPOLAR,OP-AMP;LOW NOISE;OP27GS,SO8.150,TUBE	80009	156-5690-00
A12A1U614	156-5467-00			IC,LINEAR:BIPOLAR,OP-AMP;1.0GHZ GBW;NE5539D,SO14.150	80009	156-5467-00
A12A1U650	156-5119-00			IC,LINEAR:BIPOLAR,COMPARATOR;DUAL,OPEN COLLECTOR,80NS;LM319D,SO14.150,TUBE	80009	156-5119-00
A12A1U700	156-5274-01			IC,MISC:CMOS,ANALOG SWITCH;QUAD;DG211,SO16.150,16MM T&R	80009	156-5274-01
A12A1U713	156-5082-01			IC,LINEAR:BIPOLAR,OP-AMP;LOW OFFSET;OP07CD, SO8.150,16MM T&R	80009	156-5082-01
A12A1U720	156-5280-00			IC,LINEAR:BIPOLAR,AMPLIFIER;RF AMP,20DB GAIN,600MHZ;NE5205AD,SO8.150	80009	156-5280-00
A12A1U723	156-5280-00			IC,LINEAR:BIPOLAR,AMPLIFIER;RF AMP,20DB GAIN,600MHZ;NE5205AD,SO8.150	80009	156-5280-00
A12A1U740	156-5082-01			IC,LINEAR:BIPOLAR,OP-AMP;LOW OFFSET;OP07CD, SO8.150,16MM T&R	80009	156-5082-01
A12A1U743	156-5082-01			IC,LINEAR:BIPOLAR,OP-AMP;LOW OFFSET;OP07CD, SO8.150,16MM T&R	80009	156-5082-01
A12A1U757	156-5274-01			IC,MISC:CMOS,ANALOG SWITCH;QUAD;DG211,SO16.150,16MM T&R	80009	156-5274-01
A12A1U810	156-2848-00			IC,LINEAR:	80009	156-2848-00
A12A1U811	156-5082-01			IC,LINEAR:BIPOLAR,OP-AMP;LOW OFFSET;OP07CD, SO8.150,16MM T&R	80009	156-5082-01
A12A1U820	156-5082-01			IC,LINEAR:BIPOLAR,OP-AMP;LOW OFFSET;OP07CD, SO8.150,16MM T&R	80009	156-5082-01
A12A1U821	156-5082-01			IC,LINEAR:BIPOLAR,OP-AMP;LOW OFFSET;OP07CD, SO8.150,16MM T&R	80009	156-5082-01
A12A1U830	156-5571-00			IC,MISC:CMOS,ANALOG MUX;TRIPLE,2 CHAN;MC14053B,SO16.150,TUBE	80009	156-5571-00
A12A1U831	156-5570-00			IC,MISC:CMOS,ANALOG MUX;DUAL 4-CHANNEL;MC14052B,SO16.150,TUBE	80009	156-5570-00
A12A1U845	156-5082-01			IC,LINEAR:BIPOLAR,OP-AMP;LOW OFFSET;OP07CD, SO8.150,16MM T&R	80009	156-5082-01
A12A1U850	156-5300-00			IC,CONVERTER:	80009	156-5300-00
A12A1U852	156-5082-01			IC,LINEAR:BIPOLAR,OP-AMP;LOW OFFSET;OP07CD, SO8.150,16MM T&R	80009	156-5082-01
A12A1U854	156-5082-01			IC,LINEAR:BIPOLAR,OP-AMP;LOW OFFSET;OP07CD, SO8.150,16MM T&R	80009	156-5082-01
A12A1U910	156-5082-01			IC,LINEAR:BIPOLAR,OP-AMP;LOW OFFSET;OP07CD, SO8.150,16MM T&R	80009	156-5082-01
A12A1U920	156-5082-01			IC,LINEAR:BIPOLAR,OP-AMP;LOW OFFSET;OP07CD, SO8.150,16MM T&R	80009	156-5082-01
A12A1U921	156-5082-01			IC,LINEAR:BIPOLAR,OP-AMP;LOW OFFSET;OP07CD, SO8.150,16MM T&R	80009	156-5082-01
A12A1U940	156-5082-01			IC,LINEAR:BIPOLAR,OP-AMP;LOW OFFSET;OP07CD, SO8.150,16MM T&R	80009	156-5082-01
A12A1U941	156-5082-01			IC,LINEAR:BIPOLAR,OP-AMP;LOW OFFSET;OP07CD, SO8.150,16MM T&R	80009	156-5082-01
A12A1U950	156-5300-00			IC,CONVERTER:	80009	156-5300-00
A12A1U952	156-5082-01			IC,LINEAR:BIPOLAR,OP-AMP;LOW OFFSET;OP07CD, SO8.150,16MM T&R	80009	156-5082-01

Component No.	Tektronix Part No.	Serial/Assembly No. Effective	Dscont	Name & Description	Mfr. Code	Mfr. Part No.
A12A1U954	156-5082-01			IC,LINEAR:BIPOLAR,OP-AMP;LOW OFFSET;OP07CD, SO8.150,16MM T&R	80009	156-5082-01
A12A1VR160	152-0526-00			DIODE,ZENER:,;6.35V,1%,0.4W;1N829A FMLY,DO-7	14552	DT840615A
A12A1VR803	152-5007-00			DIODE,ZENER:,;9.1V,5%,225MW;MMBZ5239BL,SOT-23,8MM TR	80009	152-5007-00
A12A1VR902	152-5007-00			DIODE,ZENER:,;9.1V,5%,225MW;MMBZ5239BL,SOT-23,8MM TR	80009	152-5007-00
A12A2	----- -----			(PART OF A12) HIGH FREQ VCO		
A12A2C103	283-5004-00			CAP,FXD,CER DI:0.1UF,10%,25V	80009	283-5004-00
A12A2C110	290-5003-00			CAP,FXD,ELCTLT:47UF,20%,10V	80009	290-5003-00
A12A2C111	290-5003-00			CAP,FXD,ELCTLT:47UF,20%,10V	80009	290-5003-00
A12A2C120	290-5003-00			CAP,FXD,ELCTLT:47UF,20%,10V	80009	290-5003-00
A12A2C133	283-5011-00			CAP,FXD,CER DI:33PF,5%,50V	95275	VJ1206A330JXA
A12A2C200	283-5003-00			CAP,FXD,CER DI:0.01UF,10%,50V	80009	283-5003-00
A12A2C204	283-5003-00			CAP,FXD,CER DI:0.01UF,10%,50V	80009	283-5003-00
A12A2C212	283-5004-00			CAP,FXD,CER DI:0.1UF,10%,25V	80009	283-5004-00
A12A2C222	283-5004-00			CAP,FXD,CER DI:0.1UF,10%,25V	80009	283-5004-00
A12A2C224	283-5004-00			CAP,FXD,CER DI:0.1UF,10%,25V	80009	283-5004-00
A12A2C231	283-5011-00			CAP,FXD,CER DI:33PF,5%,50V	95275	VJ1206A330JXA
A12A2C233	283-5009-00			CAP,FXD,CER DI:15PF,5%,50V	54583	C3216C0G1H150J
A12A2C234	283-5025-00			CAP,FXD,CER DI:220PF,5%,50V	80009	283-5025-00
A12A2C302	283-5004-00			CAP,FXD,CER DI:0.1UF,10%,25V	80009	283-5004-00
A12A2C310	283-5004-00			CAP,FXD,CER DI:0.1UF,10%,25V	80009	283-5004-00
A12A2C321	283-5004-00			CAP,FXD,CER DI:0.1UF,10%,25V	80009	283-5004-00
A12A2C331	283-5022-00			CAP,FXD,CER DI:47PF,5%,50V	54583	
A12A2C332	283-5001-00			CAP,FXD,CER DI:100PF,5%,50V	80009	283-5001-00
A12A2C333	290-5002-00			CAP,FXD,ELCTLT:10UF,20V	TK1424	20MC100M-TER
A12A2C404	283-5004-00			CAP,FXD,CER DI:0.1UF,10%,25V	80009	283-5004-00
A12A2C407	283-5004-00			CAP,FXD,CER DI:0.1UF,10%,25V	80009	283-5004-00
A12A2C412	283-5004-00			CAP,FXD,CER DI:0.1UF,10%,25V	80009	283-5004-00
A12A2C413	283-5004-00			CAP,FXD,CER DI:0.1UF,10%,25V	80009	283-5004-00
A12A2C414	283-5002-00			CAP,FXD,CER DI:1000PF,10%,50V	80009	283-5002-00
A12A2C422	283-5004-00			CAP,FXD,CER DI:0.1UF,10%,25V	80009	283-5004-00
A12A2C431	283-5002-00			CAP,FXD,CER DI:1000PF,10%,50V	80009	283-5002-00
A12A2C500	283-5004-00			CAP,FXD,CER DI:0.1UF,10%,25V	80009	283-5004-00
A12A2C510	283-5004-00			CAP,FXD,CER DI:0.1UF,10%,25V	80009	283-5004-00
A12A2C512	283-5006-00			CAP,FXD,CER DI:5PF,+/- 0.25PF,50V	54583	C3216C0G1H050C
A12A2C520	283-5004-00			CAP,FXD,CER DI:0.1UF,10%,25V	80009	283-5004-00
A12A2C521	283-5005-00			CAP,FXD,CER DI:4PF;+/- 0.25PF,50V	54583	C3216C0G1H040C
A12A2C523	283-5022-00			CAP,FXD,CER DI:47PF,5%,50V	54583	
A12A2C532	283-5002-00			CAP,FXD,CER DI:1000PF,10%,50V	80009	283-5002-00
A12A2C533	283-5001-00			CAP,FXD,CER DI:100PF,5%,50V	80009	283-5001-00
A12A2C611	281-0165-00			CAP,VAR,AIR DI:0.8-10PF,250V	80009	281-0165-00
A12A2C630	290-5002-00			CAP,FXD,ELCTLT:10UF,20V	TK1424	20MC100M-TER
A12A2C631	283-5001-00			CAP,FXD,CER DI:100PF,5%,50V	80009	283-5001-00
A12A2CR511	152-5010-00			DIODE,SIG:,VVC;30V,29PF,C3/25=5.75;MMBV109L ,SOT-23,8MM TR	80009	152-5010-00
A12A2L230	108-5030-00			COIL,RF:FXD,100NH, +/- 10 %,Q=25,SRF 950 MH Z,DCR 0.56 OHM, I	80009	108-5030-00
A12A2L232	108-5004-00			COIL,RF:	80009	108-5004-00
A12A2L415	108-5000-00			COIL,RF:	80009	108-5000-00
A12A2L610	108-1325-00			COIL RF:100NH,6.75 TURNS,#16 WIRE,0.5 IN LO NG,ONE LEAD BENT 90DEGREES	80009	108-1325-00
A12A2Q101	151-5001-00			TRANSISTOR,SIG:BIPOLAR,NPN;40V,200MA,300MHZ ,AMPLIFIER;MMBT3904L,TO-236/SOT-23,8MM T&R	80009	151-5001-00
A12A2Q213	151-5011-00			TRANSISTOR,SIG:BIPOLAR,NPN;12V,50MA,900MHZ, AMPLIFIER;MMBR5179L,TO-236/SOT-23,8MM T&R	80009	151-5011-00

Component No.	Tektronix Part No.	Serial/Assembly No. Effective	Dscont	Name & Description	Mfr. Code	Mfr. Part No.
A12A2Q316	151-5011-00			TRANSISTOR,SIG:BIPOLAR,NPN;12V,50MA,900MHZ, AMPLIFIER;MMBR5179L,TO-236/SOT-23,8MM T&R	80009	151-5011-00
A12A2Q400	151-5011-00			TRANSISTOR,SIG:BIPOLAR,NPN;12V,50MA,900MHZ, AMPLIFIER;MMBR5179L,TO-236/SOT-23,8MM T&R	80009	151-5011-00
A12A2Q410	151-5011-00			TRANSISTOR,SIG:BIPOLAR,NPN;12V,50MA,900MHZ, AMPLIFIER;MMBR5179L,TO-236/SOT-23,8MM T&R	80009	151-5011-00
A12A2Q425	151-5000-00			TRANSISTOR,SIG:BIPOLAR,PNP;40V,200MA,250MHZ ,AMPLIFIER;MMBT3906L,TO-236/SOT-23,8MM T&R	04713	MMBT3906LT1
A12A2Q522	151-5001-00			TRANSISTOR,SIG:BIPOLAR,NPN;40V,200MA,300MHZ ,AMPLIFIER;MMBT3904L,TO-236/SOT-23,8MM T&R	80009	151-5001-00
A12A2R3	317-0101-00			RES,FXD,CMPSN:100 OHM,5%,0.125W	80009	317-0101-00
A12A2R102	321-5030-00			RES,FXD:METAL FILM;10.0K OHM,1%,0.125W,TC=1 00 PPM;1206,T&R	80009	321-5030-00
A12A2R121	321-5017-00			RES,FXD:METAL FILM;825 OHM,1%,0.125W,TC=100 PPM;1206,T&R	80009	321-5017-00
A12A2R123	321-5023-00			RES,FXD:METAL FILM;2.74K OHM,1%,0.125W,TC=1 00 PPM;1206,T&R	80009	321-5023-00
A12A2R130	321-5006-00			RES,FXD:METAL FILM;100 OHM,1%,0.125W,TC=100 PPM;1206,T&R	80009	321-5006-00
A12A2R131	321-5045-00			RES,FXD:METAL FILM;68.1 OHM,1%,0.125W,TC=10 0 PPM;1206,T&R	80009	321-5045-00
A12A2R132	321-5006-00			RES,FXD:METAL FILM;100 OHM,1%,0.125W,TC=100 PPM;1206,T&R	80009	321-5006-00
A12A2R201	321-5013-00			RES,FXD:METAL FILM;392 OHM,1%,0.125W,TC=100 PPM;1206,T&R	80009	321-5013-00
A12A2R202	321-5013-00			RES,FXD:METAL FILM;392 OHM,1%,0.125W,TC=100 PPM;1206,T&R	80009	321-5013-00
A12A2R203	321-5015-00			RES,FXD:METAL FILM;562 OHM,1%,0.125W,TC=100 PPM;1206,T&R	80009	321-5015-00
A12A2R210	321-5016-00			RES,FXD:METAL FILM;681 OHM,1%,0.125W,TC=100 PPM;1206,T&R	01121	BCK6810FT
A12A2R211	321-5016-00			RES,FXD:METAL FILM;681 OHM,1%,0.125W,TC=100 PPM;1206,T&R	01121	BCK6810FT
A12A2R220	321-5042-00			RES,FXD:METAL FILM;39.2 OHM,1%,0.125W,TC=10 0 PPM;1206,T&R	80009	321-5042-00
A12A2R221	321-5002-00			RES,FXD:METAL FILM;15 OHM,1%,0.125W,TC=100 PPM;1206,T&R	57668	MCR18EZHFW 15E0
A12A2R223	321-5006-00			RES,FXD:METAL FILM;100 OHM,1%,0.125W,TC=100 PPM;1206,T&R	80009	321-5006-00
A12A2R301	321-5015-00			RES,FXD:METAL FILM;562 OHM,1%,0.125W,TC=100 PPM;1206,T&R	80009	321-5015-00
A12A2R311	321-5000-00			RES,FXD:METAL FILM;10 OHM,1%,0.125W,TC=100 PPM;1206,T&R	57668	MCR18EZHFW10E
A12A2R312	321-5000-00			RES,FXD:METAL FILM;10 OHM,1%,0.125W,TC=100 PPM;1206,T&R	57668	MCR18EZHFW10E
A12A2R313	321-5010-00			RES,FXD:METAL FILM;221 OHM,1%,0.125W,TC=100 PPM;1206,T&R	80009	321-5010-00
A12A2R314	321-5018-00			RES,FXD:METAL FILM;1.0K OHM,1%,0.125W,TC=10 0 PPM;1206,T&R	80009	321-5018-00
A12A2R315	321-5042-00			RES,FXD:METAL FILM;39.2 OHM,1%,0.125W,TC=10 0 PPM;1206,T&R	80009	321-5042-00
A12A2R322	321-5006-00			RES,FXD:METAL FILM;100 OHM,1%,0.125W,TC=100 PPM;1206,T&R	80009	321-5006-00
A12A2R330	321-5043-00			RES,FXD:METAL FILM;47.5 OHM,1%,0.125W,TC=10 0 PPM;1206,T&R	80009	321-5043-00
A12A2R401	321-5019-00			RES,FXD:METAL FILM;1.21K OHM,1%,0.125W,TC=1 00 PPM;1206,T&R	80009	321-5019-00
A12A2R402	321-5028-00			RES,FXD:METAL FILM;6.81K OHM,1%,0.125W,TC=1 00 PPM;1206,T&R	80009	321-5028-00

Component No.	Tektronix Part No.	Serial/Assembly No. Effective	Dscont	Name & Description	Mfr. Code	Mfr. Part No.
A12A2R403	321-5043-00			RES,FXD:METAL FILM;47.5 OHM,1%,0.125W,TC=100 PPM;1206,T&R	80009	321-5043-00
A12A2R405	321-5043-00			RES,FXD:METAL FILM;47.5 OHM,1%,0.125W,TC=100 PPM;1206,T&R	80009	321-5043-00
A12A2R406	321-5000-00			RES,FXD:METAL FILM;10 OHM,1%,0.125W,TC=100 PPM;1206,T&R	57668	MCR18EZHFW10E
A12A2R411	321-5018-00			RES,FXD:METAL FILM;1.0K OHM,1%,0.125W,TC=100 PPM;1206,T&R	80009	321-5018-00
A12A2R416	321-5008-00			RES,FXD:METAL FILM;150 OHM,1%,0.125W,TC=100 PPM;1206,T&R	80009	321-5008-00
A12A2R420	321-5043-00			RES,FXD:METAL FILM;47.5 OHM,1%,0.125W,TC=100 PPM;1206,T&R	80009	321-5043-00
A12A2R421	321-5011-00			RES,FXD:METAL FILM;274 OHM,1%,0.125W,TC=100 PPM;1206,T&R	80009	321-5011-00
A12A2R423	321-5019-00			RES,FXD:METAL FILM;1.21K OHM,1%,0.125W,TC=100 PPM;1206,T&R	80009	321-5019-00
A12A2R424	321-5011-00			RES,FXD:METAL FILM;274 OHM,1%,0.125W,TC=100 PPM;1206,T&R	80009	321-5011-00
A12A2R430	321-5004-00			RES,FXD:METAL FILM;22.1 OHM,1%,0.125W,TC=100 PPM;1206,T&R	80009	321-5004-00
A12A2R432	321-5024-00			RES,FXD:METAL FILM;3.32K OHM,1%,0.125W,TC=100 PPM;1206,T&R	80009	321-5024-00
A12A2R433	321-5018-00			RES,FXD:METAL FILM;1.0K OHM,1%,0.125W,TC=100 PPM;1206,T&R	80009	321-5018-00
A12A2R434	321-5018-00			RES,FXD:METAL FILM;1.0K OHM,1%,0.125W,TC=100 PPM;1206,T&R	80009	321-5018-00
A12A2R524	321-5019-00			RES,FXD:METAL FILM;1.21K OHM,1%,0.125W,TC=100 PPM;1206,T&R	80009	321-5019-00
A12A2R530	321-5050-00			RES,FXD:METAL FILM;33.2 OHM,1%,0.125W,TC=100 PPM;1206,T&R	57668	MCR18FWEA33E2
A12A2R531	321-5024-00			RES,FXD:METAL FILM;3.32K OHM,1%,0.125W,TC=100 PPM;1206,T&R	80009	321-5024-00
A12A2R630	317-0101-00			RES,FXD,CMPSN:100 OHM,5%,0.125W	80009	317-0101-00
A12A2T200	120-0318-00			XFMR,TOROID:	TK1345	120-0318-00
A12A2U122	156-1161-00			IC,LINEAR:BIPOLAR,VOLTAGE REGULATOR;POSITIVE,ADJUSTABLE,1.5A,4%;LM317T,TO-220	04713	LM317T
A12A2U300	156-5221-00			IC,DIGITAL:ECL,FLIP FLOP;DUAL D-TYPE;10H131,PLCC20,TUBE	80009	156-5221-00
A12A2U320	119-5001-00			MIXER,RING:+7DBM LO,SMD	80009	119-5001-00
A12A2U435	156-5095-01			IC,LINEAR:BIPOLAR,OP-AMP;LOW NOISE,HIGH OUTPUT DRIVE;NE5534D,SO8.150,12MM T&R	80009	156-5095-01
A12A3	----- -----			(PART OF A12) LOW FREQUENCY		
A12A3C100	290-5003-00			CAP,FXD,ELCTLT:47UF,20%,10V	80009	290-5003-00
A12A3C110	290-5002-00			CAP,FXD,ELCTLT:10UF,20V	TK1424	20MC100M-TER
A12A3C122	283-5004-00			CAP,FXD,CER DI:0.1UF,10%,25V	80009	283-5004-00
A12A3C124	283-5004-00			CAP,FXD,CER DI:0.1UF,10%,25V	80009	283-5004-00
A12A3C130	283-5004-00			CAP,FXD,CER DI:0.1UF,10%,25V	80009	283-5004-00
A12A3C211	283-5004-00			CAP,FXD,CER DI:0.1UF,10%,25V	80009	283-5004-00
A12A3C220	283-5004-00			CAP,FXD,CER DI:0.1UF,10%,25V	80009	283-5004-00
A12A3C224	283-5004-00			CAP,FXD,CER DI:0.1UF,10%,25V	80009	283-5004-00
A12A3C300	283-5014-00			CAP,FXD,CER DI:330PF,5%,50V	80009	283-5014-00
A12A3C303	283-5003-00			CAP,FXD,CER DI:0.01UF,10%,50V	80009	283-5003-00
A12A3C304	283-5004-00			CAP,FXD,CER DI:0.1UF,10%,25V	80009	283-5004-00
A12A3C311	283-5004-00			CAP,FXD,CER DI:0.1UF,10%,25V	80009	283-5004-00
A12A3C316	283-5004-00			CAP,FXD,CER DI:0.1UF,10%,25V	80009	283-5004-00
A12A3C400	283-5001-00			CAP,FXD,CER DI:100PF,5%,50V	80009	283-5001-00
A12A3C412	283-5004-00			CAP,FXD,CER DI:0.1UF,10%,25V	80009	283-5004-00
A12A3C420	290-5003-00			CAP,FXD,ELCTLT:47UF,20%,10V	80009	290-5003-00
A12A3C421	283-5004-00			CAP,FXD,CER DI:0.1UF,10%,25V	80009	283-5004-00

Component No.	Tektronix Part No.	Serial/Assembly No. Effective	Dscont	Name & Description	Mfr. Code	Mfr. Part No.
A12A3C431	283-5004-00			CAP,FXD,CER DI:0.1UF,10%,25V	80009	283-5004-00
A12A3C500	283-5001-00			CAP,FXD,CER DI:100PF,5%,50V	80009	283-5001-00
A12A3C513	283-5004-00			CAP,FXD,CER DI:0.1UF,10%,25V	80009	283-5004-00
A12A3C515	283-5004-00			CAP,FXD,CER DI:0.1UF,10%,25V	80009	283-5004-00
A12A3C520	283-5004-00			CAP,FXD,CER DI:0.1UF,10%,25V	80009	283-5004-00
A12A3C521	290-5003-00			CAP,FXD,ELCTLT:47UF,20%,10V	80009	290-5003-00
A12A3C522	290-5003-00			CAP,FXD,ELCTLT:47UF,20%,10V	80009	290-5003-00
A12A3C523	290-5003-00			CAP,FXD,ELCTLT:47UF,20%,10V	80009	290-5003-00
A12A3C530	283-5004-00			CAP,FXD,CER DI:0.1UF,10%,25V	80009	283-5004-00
A12A3C531	283-5004-00			CAP,FXD,CER DI:0.1UF,10%,25V	80009	283-5004-00
A12A3C533	283-5001-00			CAP,FXD,CER DI:100PF,5%,50V	80009	283-5001-00
A12A3C542	283-5003-00			CAP,FXD,CER DI:0.01UF,10%,50V	80009	283-5003-00
A12A3CR216	152-0842-00			DIODE,SIG:SCHTKY,;COM-ANODE,20V,410MV,1.3PF ;HSMS-2812,SOT-23,T&R	04713	SRV-V-017
A12A3CR413	152-0842-00			DIODE,SIG:SCHTKY,;COM-ANODE,20V,410MV,1.3PF ;HSMS-2812,SOT-23,T&R	04713	SRV-V-017
A12A3CR532	152-0578-00			SEMICOND DVC,DI:VVC,SI,22-155PF,DO-7	50101	V34-4202
A12A3CR540	152-0578-00			SEMICOND DVC,DI:VVC,SI,22-155PF,DO-7	50101	V34-4202
A12A3E411	276-0532-00			SHLD BEAD,ELEK:FERRITE	80009	276-0532-00
A12A3E511	276-0532-00			SHLD BEAD,ELEK:FERRITE	80009	276-0532-00
A12A3E514	276-0532-00			SHLD BEAD,ELEK:FERRITE	80009	276-0532-00
A12A3L200	108-5018-00			COIL,RF:FXD,4.7UH,20%, Q=50, SRF 45 MHZ, DC R 1.0 OHM, I MAX	80009	108-5018-00
A12A3L534	108-1042-00			COIL,RF:FXD,4.7UH 8% TOROID	80009	108-1042-00
A12A3Q213	151-5000-00			TRANSISTOR,SIG:BIPOLAR,PNP;40V,200MA,250MHZ ,AMPLIFIER;MMBT3906L,TO-236/SOT-23,8MM T&R	04713	MMBT3906LT1
A12A3Q215	151-5000-00			TRANSISTOR,SIG:BIPOLAR,PNP;40V,200MA,250MHZ ,AMPLIFIER;MMBT3906L,TO-236/SOT-23,8MM T&R	04713	MMBT3906LT1
A12A3Q223	151-5000-00			TRANSISTOR,SIG:BIPOLAR,PNP;40V,200MA,250MHZ ,AMPLIFIER;MMBT3906L,TO-236/SOT-23,8MM T&R	04713	MMBT3906LT1
A12A3Q310	151-5001-00			TRANSISTOR,SIG:BIPOLAR,NPN;40V,200MA,300MHZ ,AMPLIFIER;MMBT3904L,TO-236/SOT-23,8MM T&R	80009	151-5001-00
A12A3Q312	151-5001-00			TRANSISTOR,SIG:BIPOLAR,NPN;40V,200MA,300MHZ ,AMPLIFIER;MMBT3904L,TO-236/SOT-23,8MM T&R	80009	151-5001-00
A12A3Q422	151-5001-00			TRANSISTOR,SIG:BIPOLAR,NPN;40V,200MA,300MHZ ,AMPLIFIER;MMBT3904L,TO-236/SOT-23,8MM T&R	80009	151-5001-00
A12A3Q426	151-5001-00			TRANSISTOR,SIG:BIPOLAR,NPN;40V,200MA,300MHZ ,AMPLIFIER;MMBT3904L,TO-236/SOT-23,8MM T&R	80009	151-5001-00
A12A3R111	321-0932-03			RES,FXD,FILM:2.5K OHM,0.25%,0.125W,TC=T2	2M627	CRA18CY2.5KOHM
A12A3R121	321-5004-00			RES,FXD:METAL FILM;22.1 OHM,1%,0.125W,TC=10 0 PPM;1206,T&R	80009	321-5004-00
A12A3R125	321-0168-02			RES,FXD,FILM:549 OHM,0.5%,0.125W,TC=T2	19701	5033RC549R0D
A12A3R126	321-5030-00			RES,FXD:METAL FILM;10.0K OHM,1%,0.125W,TC=1 00 PPM;1206,T&R	80009	321-5030-00
A12A3R201	321-5008-00			RES,FXD:METAL FILM;150 OHM,1%,0.125W,TC=100 PPM;1206,T&R	80009	321-5008-00
A12A3R210	321-5043-00			RES,FXD:METAL FILM;47.5 OHM,1%,0.125W,TC=10 0 PPM;1206,T&R	80009	321-5043-00
A12A3R212	321-5004-00			RES,FXD:METAL FILM;22.1 OHM,1%,0.125W,TC=10 0 PPM;1206,T&R	80009	321-5004-00
A12A3R214	321-5043-00			RES,FXD:METAL FILM;47.5 OHM,1%,0.125W,TC=10 0 PPM;1206,T&R	80009	321-5043-00
A12A3R221	321-5019-00			RES,FXD:METAL FILM;1.21K OHM,1%,0.125W,TC=1 00 PPM;1206,T&R	80009	321-5019-00
A12A3R222	321-5004-00			RES,FXD:METAL FILM;22.1 OHM,1%,0.125W,TC=10 0 PPM;1206,T&R	80009	321-5004-00
A12A3R230	321-5025-00			RES,FXD:METAL FILM;3.92K OHM,1%,0.125W,TC=1 00 PPM;1206,T&R	80009	321-5025-00

Component No.	Tektronix Part No.	Serial/Assembly No. Effective	Dscont	Name & Description	Mfr. Code	Mfr. Part No.
A12A3R241	321-5013-00			RES,FXD:METAL FILM;392 OHM,1%,0.125W,TC=100 PPM;1206,T&R	80009	321-5013-00
A12A3R301	321-5015-00			RES,FXD:METAL FILM;562 OHM,1%,0.125W,TC=100 PPM;1206,T&R	80009	321-5015-00
A12A3R302	321-5008-00			RES,FXD:METAL FILM;150 OHM,1%,0.125W,TC=100 PPM;1206,T&R	80009	321-5008-00
A12A3R313	321-5018-00			RES,FXD:METAL FILM;1.0K OHM,1%,0.125W,TC=10 0 PPM;1206,T&R	80009	321-5018-00
A12A3R315	321-5018-00			RES,FXD:METAL FILM;1.0K OHM,1%,0.125W,TC=10 0 PPM;1206,T&R	80009	321-5018-00
A12A3R423	321-5017-00			RES,FXD:METAL FILM;825 OHM,1%,0.125W,TC=100 PPM;1206,T&R	80009	321-5017-00
A12A3R424	321-5017-00			RES,FXD:METAL FILM;825 OHM,1%,0.125W,TC=100 PPM;1206,T&R	80009	321-5017-00
A12A3R425	321-5004-00			RES,FXD:METAL FILM;22.1 OHM,1%,0.125W,TC=10 0 PPM;1206,T&R	80009	321-5004-00
A12A3R501	321-5018-00			RES,FXD:METAL FILM;1.0K OHM,1%,0.125W,TC=10 0 PPM;1206,T&R	80009	321-5018-00
A12A3R502	321-5018-00			RES,FXD:METAL FILM;1.0K OHM,1%,0.125W,TC=10 0 PPM;1206,T&R	80009	321-5018-00
A12A3R516	321-5016-00			RES,FXD:METAL FILM;681 OHM,1%,0.125W,TC=100 PPM;1206,T&R	01121	BCK6810FT
A12A3R517	321-5004-00			RES,FXD:METAL FILM;22.1 OHM,1%,0.125W,TC=10 0 PPM;1206,T&R	80009	321-5004-00
A12A3R541	321-5018-00			RES,FXD:METAL FILM;1.0K OHM,1%,0.125W,TC=10 0 PPM;1206,T&R	80009	321-5018-00
A12A3R543	321-5000-00			RES,FXD:METAL FILM;10 OHM,1%,0.125W,TC=100 PPM;1206,T&R	57668	MCR18EZHFW10E
A12A3T430	120-1790-00			TRANSFORMER,RF:2.30UH,24:1:1 RATIO,W/HOLDER ,CORE 276-0700-00	TK1345	120-1790-00
A12A3U123	156-5082-01			IC,LINEAR:BIPOLAR,OP-AMP;LOW OFFSET;OP07CD, SO8.150,16MM T&R	80009	156-5082-01
A12A3U240	156-5038-00			IC,DIGITAL:LSTTL,MUX;DUAL 4-TO-1 DATA SELEC TOR;74LS153,SO16.150,TUBE	80009	156-5038-00
A12A3U410	156-5074-00			IC,DIGITAL:HCMOS,FLIP FLOP;DUAL D-TYPE;74HC 74,SO14.150,TUBE	80009	156-5074-00
A12A3U510	156-5098-00			IC,DIGITAL:HCTCMOS,GATE;QUAD 2-INPUT NAND;7 4HCT00,SO14.150,TUBE	80009	156-5098-00
A12A3U512	156-5074-00			IC,DIGITAL:HCMOS,FLIP FLOP;DUAL D-TYPE;74HC 74,SO14.150,TUBE	80009	156-5074-00
A13	670-9475-03	B010100	B010177	CIRCUIT BD ASSY:VR W/SMD	80009	670-9475-03
A13	670-9475-04	B010178		CIRCUIT BD ASSY:VARIABLE RESOLUTION	80009	670-9475-04
A13C103	283-5004-00			CAP,FXD,CER DI:0.1UF,10%,25V	80009	283-5004-00
A13C104	283-5004-00			CAP,FXD,CER DI:0.1UF,10%,25V	80009	283-5004-00
A13C105	283-5004-00			CAP,FXD,CER DI:0.1UF,10%,25V	80009	283-5004-00
A13C106	283-5004-00			CAP,FXD,CER DI:0.1UF,10%,25V	80009	283-5004-00
A13C110	283-5004-00			CAP,FXD,CER DI:0.1UF,10%,25V	80009	283-5004-00
A13C133	283-5004-00			CAP,FXD,CER DI:0.1UF,10%,25V	80009	283-5004-00
A13C135	283-5004-00			CAP,FXD,CER DI:0.1UF,10%,25V	80009	283-5004-00
A13C141	283-5004-00			CAP,FXD,CER DI:0.1UF,10%,25V	80009	283-5004-00
A13C147	283-5004-00			CAP,FXD,CER DI:0.1UF,10%,25V	80009	283-5004-00
A13C153	283-5004-00			CAP,FXD,CER DI:0.1UF,10%,25V	80009	283-5004-00
A13C154	283-5004-00			CAP,FXD,CER DI:0.1UF,10%,25V	80009	283-5004-00
A13C164	283-5004-00			CAP,FXD,CER DI:0.1UF,10%,25V	80009	283-5004-00
A13C165	283-5004-00			CAP,FXD,CER DI:0.1UF,10%,25V	80009	283-5004-00
A13C166	283-5004-00			CAP,FXD,CER DI:0.1UF,10%,25V	80009	283-5004-00
A13C170	283-5004-00			CAP,FXD,CER DI:0.1UF,10%,25V	80009	283-5004-00
A13C171	283-5004-00			CAP,FXD,CER DI:0.1UF,10%,25V	80009	283-5004-00
A13C172	283-5004-00			CAP,FXD,CER DI:0.1UF,10%,25V	80009	283-5004-00

Component No.	Tektronix Part No.	Serial/Assembly No. Effective	Dscont	Name & Description	Mfr. Code	Mfr. Part No.
A13C173	283-5003-00			CAP,FXD,CER DI:0.01UF,10%,50V	80009	283-5003-00
A13C182	283-5004-00			CAP,FXD,CER DI:0.1UF,10%,25V	80009	283-5004-00
A13C183	283-5004-00			CAP,FXD,CER DI:0.1UF,10%,25V	80009	283-5004-00
A13C187	283-5004-00			CAP,FXD,CER DI:0.1UF,10%,25V	80009	283-5004-00
A13C191	283-5004-00			CAP,FXD,CER DI:0.1UF,10%,25V	80009	283-5004-00
A13C201	283-5003-00			CAP,FXD,CER DI:0.01UF,10%,50V	80009	283-5003-00
A13C205	283-5004-00			CAP,FXD,CER DI:0.1UF,10%,25V	80009	283-5004-00
A13C206	283-5004-00			CAP,FXD,CER DI:0.1UF,10%,25V	80009	283-5004-00
A13C210	283-5004-00			CAP,FXD,CER DI:0.1UF,10%,25V	80009	283-5004-00
A13C211	281-0267-00			CAP,VAR,CERAMIC:6-50PF,50V	80009	281-0267-00
A13C212	283-5022-00			CAP,FXD,CER DI:47PF,5%,50V	54583	
A13C214	283-5022-00			CAP,FXD,CER DI:47PF,5%,50V	54583	
A13C220	281-0267-00			CAP,VAR,CERAMIC:6-50PF,50V	80009	281-0267-00
A13C221	283-5011-00			CAP,FXD,CER DI:33PF,5%,50V	95275	VJ1206A330JXA
A13C230	281-0267-00			CAP,VAR,CERAMIC:6-50PF,50V	80009	281-0267-00
A13C231	283-5022-00			CAP,FXD,CER DI:47PF,5%,50V	54583	
A13C232	283-5004-00			CAP,FXD,CER DI:0.1UF,10%,25V	80009	283-5004-00
A13C234	283-5022-00			CAP,FXD,CER DI:47PF,5%,50V	54583	
A13C236	283-5004-00			CAP,FXD,CER DI:0.1UF,10%,25V	80009	283-5004-00
A13C240	283-5004-00			CAP,FXD,CER DI:0.1UF,10%,25V	80009	283-5004-00
A13C241	283-5004-00			CAP,FXD,CER DI:0.1UF,10%,25V	80009	283-5004-00
A13C242	283-5004-00			CAP,FXD,CER DI:0.1UF,10%,25V	80009	283-5004-00
A13C254	283-5004-00			CAP,FXD,CER DI:0.1UF,10%,25V	80009	283-5004-00
A13C255	283-5004-00			CAP,FXD,CER DI:0.1UF,10%,25V	80009	283-5004-00
A13C261	283-5004-00			CAP,FXD,CER DI:0.1UF,10%,25V	80009	283-5004-00
A13C262	283-5004-00			CAP,FXD,CER DI:0.1UF,10%,25V	80009	283-5004-00
A13C263	283-5004-00			CAP,FXD,CER DI:0.1UF,10%,25V	80009	283-5004-00
A13C270	283-5004-00			CAP,FXD,CER DI:0.1UF,10%,25V	80009	283-5004-00
A13C271	283-5004-00			CAP,FXD,CER DI:0.1UF,10%,25V	80009	283-5004-00
A13C272	283-5004-00			CAP,FXD,CER DI:0.1UF,10%,25V	80009	283-5004-00
A13C280	283-5004-00			CAP,FXD,CER DI:0.1UF,10%,25V	80009	283-5004-00
A13C281	283-5004-00			CAP,FXD,CER DI:0.1UF,10%,25V	80009	283-5004-00
A13C282	283-5004-00			CAP,FXD,CER DI:0.1UF,10%,25V	80009	283-5004-00
A13C283	283-5004-00			CAP,FXD,CER DI:0.1UF,10%,25V	80009	283-5004-00
A13C290	283-5004-00			CAP,FXD,CER DI:0.1UF,10%,25V	80009	283-5004-00
A13C291	283-5004-00			CAP,FXD,CER DI:0.1UF,10%,25V	80009	283-5004-00
A13C292	283-5004-00			CAP,FXD,CER DI:0.1UF,10%,25V	80009	283-5004-00
A13C293	283-5004-00			CAP,FXD,CER DI:0.1UF,10%,25V	80009	283-5004-00
A13C294	283-0108-00	B010100	B010177	CAP,FXD,CER DI:220PF,10%,200V	04222	SR152A221KAA
A13C294	283-5025-00	B010178		CAP,FXD,CER DI:220PF,5%,50V	80009	283-5025-00
A13C296	283-0108-00			CAP,FXD,CER DI:220PF,10%,200V	04222	SR152A221KAA
A13C302	283-5004-00			CAP,FXD,CER DI:0.1UF,10%,25V	80009	283-5004-00
A13C311	283-5004-00			CAP,FXD,CER DI:0.1UF,10%,25V	80009	283-5004-00
A13C314	281-0267-00			CAP,VAR,CERAMIC:6-50PF,50V	80009	281-0267-00
A13C315	283-5000-00			CAP,FXD,CER DI:10PF,5%,50V	80009	283-5000-00
A13C317	283-5009-00			CAP,FXD,CER DI:15PF,5%,50V	54583	C3216C0G1H150J
A13C319	283-5004-00			CAP,FXD,CER DI:0.1UF,10%,25V	80009	283-5004-00
A13C322	283-5004-00			CAP,FXD,CER DI:0.1UF,10%,25V	80009	283-5004-00
A13C325	283-5004-00			CAP,FXD,CER DI:0.1UF,10%,25V	80009	283-5004-00
A13C329	283-5004-00			CAP,FXD,CER DI:0.1UF,10%,25V	80009	283-5004-00
A13C333	283-5004-00			CAP,FXD,CER DI:0.1UF,10%,25V	80009	283-5004-00
A13C334	283-5004-00			CAP,FXD,CER DI:0.1UF,10%,25V	80009	283-5004-00
A13C342	283-5004-00			CAP,FXD,CER DI:0.1UF,10%,25V	80009	283-5004-00
A13C343	283-5004-00			CAP,FXD,CER DI:0.1UF,10%,25V	80009	283-5004-00
A13C344	283-5004-00			CAP,FXD,CER DI:0.1UF,10%,25V	80009	283-5004-00
A13C345	283-5004-00			CAP,FXD,CER DI:0.1UF,10%,25V	80009	283-5004-00
A13C350	283-5004-00			CAP,FXD,CER DI:0.1UF,10%,25V	80009	283-5004-00
A13C351	283-5004-00			CAP,FXD,CER DI:0.1UF,10%,25V	80009	283-5004-00
A13C352	283-5004-00			CAP,FXD,CER DI:0.1UF,10%,25V	80009	283-5004-00

Component No.	Tektronix Part No.	Serial/Assembly No. Effective	Dscont	Name & Description	Mfr. Code	Mfr. Part No.
A13C353	283-5004-00			CAP,FXD,CER DI:0.1UF,10%,25V	80009	283-5004-00
A13C354	283-5004-00			CAP,FXD,CER DI:0.1UF,10%,25V	80009	283-5004-00
A13C360	283-5004-00			CAP,FXD,CER DI:0.1UF,10%,25V	80009	283-5004-00
A13C361	283-5004-00			CAP,FXD,CER DI:0.1UF,10%,25V	80009	283-5004-00
A13C362	283-5004-00			CAP,FXD,CER DI:0.1UF,10%,25V	80009	283-5004-00
A13C370	283-5004-00			CAP,FXD,CER DI:0.1UF,10%,25V	80009	283-5004-00
A13C371	283-5004-00			CAP,FXD,CER DI:0.1UF,10%,25V	80009	283-5004-00
A13C372	283-5004-00			CAP,FXD,CER DI:0.1UF,10%,25V	80009	283-5004-00
A13C373	283-5004-00			CAP,FXD,CER DI:0.1UF,10%,25V	80009	283-5004-00
A13C380	283-5004-00			CAP,FXD,CER DI:0.1UF,10%,25V	80009	283-5004-00
A13C381	283-5004-00			CAP,FXD,CER DI:0.1UF,10%,25V	80009	283-5004-00
A13C382	283-5004-00			CAP,FXD,CER DI:0.1UF,10%,25V	80009	283-5004-00
A13C390	283-5004-00			CAP,FXD,CER DI:0.1UF,10%,25V	80009	283-5004-00
A13C392	283-5004-00			CAP,FXD,CER DI:0.1UF,10%,25V	80009	283-5004-00
A13C399	283-5004-00			CAP,FXD,CER DI:0.1UF,10%,25V	80009	283-5004-00
A13C401	283-5004-00			CAP,FXD,CER DI:0.1UF,10%,25V	80009	283-5004-00
A13C402	283-5004-00			CAP,FXD,CER DI:0.1UF,10%,25V	80009	283-5004-00
A13C412	283-5022-00			CAP,FXD,CER DI:47PF,5%,50V	54583	
A13C413	283-5042-00			CAP,FXD,CER DI:27PF,5%,50V	80009	283-5042-00
A13C430	281-0267-00			CAP,VAR,CERAMIC:6-50PF,50V	80009	281-0267-00
A13C431	283-5022-00			CAP,FXD,CER DI:47PF,5%,50V	54583	
A13C433	283-5042-00			CAP,FXD,CER DI:27PF,5%,50V	80009	283-5042-00
A13C434	283-5009-00			CAP,FXD,CER DI:15PF,5%,50V	54583	C3216C0G1H150J
A13C435	283-5000-00			CAP,FXD,CER DI:10PF,5%,50V	80009	283-5000-00
A13C446	283-5004-00			CAP,FXD,CER DI:0.1UF,10%,25V	80009	283-5004-00
A13C447	283-5004-00			CAP,FXD,CER DI:0.1UF,10%,25V	80009	283-5004-00
A13C450	283-5001-00			CAP,FXD,CER DI:100PF,5%,50V	80009	283-5001-00
A13C451	283-5004-00			CAP,FXD,CER DI:0.1UF,10%,25V	80009	283-5004-00
A13C452	283-5004-00			CAP,FXD,CER DI:0.1UF,10%,25V	80009	283-5004-00
A13C453	283-5004-00			CAP,FXD,CER DI:0.1UF,10%,25V	80009	283-5004-00
A13C462	283-5004-00			CAP,FXD,CER DI:0.1UF,10%,25V	80009	283-5004-00
A13C463	283-5004-00			CAP,FXD,CER DI:0.1UF,10%,25V	80009	283-5004-00
A13C477	283-5004-00			CAP,FXD,CER DI:0.1UF,10%,25V	80009	283-5004-00
A13C480	283-5004-00			CAP,FXD,CER DI:0.1UF,10%,25V	80009	283-5004-00
A13C481	283-5004-00			CAP,FXD,CER DI:0.1UF,10%,25V	80009	283-5004-00
A13C482	283-5004-00			CAP,FXD,CER DI:0.1UF,10%,25V	80009	283-5004-00
A13C483	283-5004-00			CAP,FXD,CER DI:0.1UF,10%,25V	80009	283-5004-00
A13C495	283-5004-00			CAP,FXD,CER DI:0.1UF,10%,25V	80009	283-5004-00
A13C497	283-5004-00			CAP,FXD,CER DI:0.1UF,10%,25V	80009	283-5004-00
A13C500	283-5004-00			CAP,FXD,CER DI:0.1UF,10%,25V	80009	283-5004-00
A13C513	283-5004-00			CAP,FXD,CER DI:0.1UF,10%,25V	80009	283-5004-00
A13C514	283-5011-00			CAP,FXD,CER DI:33PF,5%,50V	95275	VJ1206A330JXA
A13C515	283-5004-00			CAP,FXD,CER DI:0.1UF,10%,25V	80009	283-5004-00
A13C516	283-5022-00			CAP,FXD,CER DI:47PF,5%,50V	54583	
A13C517	283-5022-00			CAP,FXD,CER DI:47PF,5%,50V	54583	
A13C518	283-5011-00			CAP,FXD,CER DI:33PF,5%,50V	95275	VJ1206A330JXA
A13C520	283-5003-00			CAP,FXD,CER DI:0.01UF,10%,50V	80009	283-5003-00
A13C521	283-5015-00			CAP,FXD,CER DI:3300PF,10%,50V	54583	
A13C522	283-5003-00			CAP,FXD,CER DI:0.01UF,10%,50V	80009	283-5003-00
A13C523	283-5000-00			CAP,FXD,CER DI:10PF,5%,50V	80009	283-5000-00
A13C524	283-5041-00			CAP,FXD,CER DI:7PF,+/-0.5PF,50V	54583	
A13C525	283-5000-00			CAP,FXD,CER DI:10PF,5%,50V	80009	283-5000-00
A13C526	283-5000-00			CAP,FXD,CER DI:10PF,5%,50V	80009	283-5000-00
A13C527	283-5022-00			CAP,FXD,CER DI:47PF,5%,50V	54583	
A13C528	283-5022-00			CAP,FXD,CER DI:47PF,5%,50V	54583	
A13C529	283-5011-00			CAP,FXD,CER DI:33PF,5%,50V	95275	VJ1206A330JXA
A13C532	283-5004-00			CAP,FXD,CER DI:0.1UF,10%,25V	80009	283-5004-00
A13C533	283-5011-00			CAP,FXD,CER DI:33PF,5%,50V	95275	VJ1206A330JXA
A13C534	283-5004-00			CAP,FXD,CER DI:0.1UF,10%,25V	80009	283-5004-00

Component No.	Tektronix Part No.	Serial/Assembly No. Effective	Dscont	Name & Description	Mfr. Code	Mfr. Part No.
A13C535	283-5004-00			CAP,FXD,CER DI:0.1UF,10%,25V	80009	283-5004-00
A13C542	283-5004-00			CAP,FXD,CER DI:0.1UF,10%,25V	80009	283-5004-00
A13C546	283-5004-00			CAP,FXD,CER DI:0.1UF,10%,25V	80009	283-5004-00
A13C549	283-5004-00			CAP,FXD,CER DI:0.1UF,10%,25V	80009	283-5004-00
A13C564	283-5004-00			CAP,FXD,CER DI:0.1UF,10%,25V	80009	283-5004-00
A13C565	283-5004-00			CAP,FXD,CER DI:0.1UF,10%,25V	80009	283-5004-00
A13C566	283-5004-00			CAP,FXD,CER DI:0.1UF,10%,25V	80009	283-5004-00
A13C576	283-5004-00			CAP,FXD,CER DI:0.1UF,10%,25V	80009	283-5004-00
A13C588	290-0944-00			CAP,FXD,ELCTLT:220UF,+50-20%,10V	55680	UVX1C221MPA
A13C590	283-5004-00			CAP,FXD,CER DI:0.1UF,10%,25V	80009	283-5004-00
A13C591	283-5004-00			CAP,FXD,CER DI:0.1UF,10%,25V	80009	283-5004-00
A13C600	283-5004-00			CAP,FXD,CER DI:0.1UF,10%,25V	80009	283-5004-00
A13C602	283-5004-00			CAP,FXD,CER DI:0.1UF,10%,25V	80009	283-5004-00
A13C607	283-5004-00			CAP,FXD,CER DI:0.1UF,10%,25V	80009	283-5004-00
A13C610	283-5000-00			CAP,FXD,CER DI:10PF,5%,50V	80009	283-5000-00
A13C611	281-0267-00			CAP,VAR,CERAMIC:6-50PF,50V	80009	281-0267-00
A13C612	281-0267-00			CAP,VAR,CERAMIC:6-50PF,50V	80009	281-0267-00
A13C613	283-5000-00			CAP,FXD,CER DI:10PF,5%,50V	80009	283-5000-00
A13C614	283-5041-00			CAP,FXD,CER DI:7PF,+/-0.5PF,50V	54583	
A13C615	283-5000-00			CAP,FXD,CER DI:10PF,5%,50V	80009	283-5000-00
A13C620	281-0267-00			CAP,VAR,CERAMIC:6-50PF,50V	80009	281-0267-00
A13C621	281-0267-00			CAP,VAR,CERAMIC:6-50PF,50V	80009	281-0267-00
A13C631	290-0944-00			CAP,FXD,ELCTLT:220UF,+50-20%,10V	55680	UVX1C221MPA
A13C642	283-5004-00			CAP,FXD,CER DI:0.1UF,10%,25V	80009	283-5004-00
A13C645	283-5004-00			CAP,FXD,CER DI:0.1UF,10%,25V	80009	283-5004-00
A13C648	283-5004-00			CAP,FXD,CER DI:0.1UF,10%,25V	80009	283-5004-00
A13C661	283-5004-00			CAP,FXD,CER DI:0.1UF,10%,25V	80009	283-5004-00
A13C673	283-5004-00			CAP,FXD,CER DI:0.1UF,10%,25V	80009	283-5004-00
A13C682	283-5004-00			CAP,FXD,CER DI:0.1UF,10%,25V	80009	283-5004-00
A13C683	283-5004-00			CAP,FXD,CER DI:0.1UF,10%,25V	80009	283-5004-00
A13C684	290-5000-00	B010100	B010177	CAP,FXD,ELCTLT:1UF,20%,50V	TK0900	S50V1MICROF
A13C684	290-5039-00	B010178		CAP,FXD,ALUM:10UF,20%,50V,6.3MM,SMD,16MM TA PE & REEL.	80009	290-5039-00
A13C689	283-5002-00			CAP,FXD,CER DI:1000PF,10%,50V	80009	283-5002-00
A13CR450	152-5004-00			DIODE,SIG:,ULTRA FAST;70V,0.15A,6NS,SER-PAI R;BAV99,SOT-23,8MM TR	25088	BAV99T
A13CR485	152-5043-00			SEMICOND DVC,DI:PIN,SI,100V,2.5 OHM,0.35PF, 0.35PF,SOT-23,HSMP-3802	80009	152-5043-00
A13CR584	152-5043-00			SEMICOND DVC,DI:PIN,SI,100V,2.5 OHM,0.35PF, 0.35PF,SOT-23,HSMP-3802	80009	152-5043-00
A13CR585	152-5043-00			SEMICOND DVC,DI:PIN,SI,100V,2.5 OHM,0.35PF, 0.35PF,SOT-23,HSMP-3802	80009	152-5043-00
A13J100	131-0951-00			CONN,RF JACK::	98291	051-051-0159-220
A13J150	131-0951-00			CONN,RF JACK::	98291	051-051-0159-220
A13J190	131-0951-00			CONN,RF JACK::	98291	051-051-0159-220
A13J620	131-0951-00			CONN,RF JACK::	98291	051-051-0159-220
A13J690	131-2920-00			CONN,HDR:PCB,;MALE,RTANG,2 X 5,0.1 CTR,0.31 8 MLG X 0.110 TAIL,0.238 H,30 GOLD;,,	80009	131-2920-00
A13L295	108-0735-00	B010100	B010177	COIL,RF:FIXED,584NH	80009	108-0735-00
A13L295	108-5005-00	B010178		COIL,RF:	80009	108-5005-00
A13L454	108-5003-00			COIL,RF:	54583	NL453232T-120K
A13L465	108-5003-00			COIL,RF:	54583	NL453232T-120K
A13L470	108-5003-00			COIL,RF:	54583	NL453232T-120K
A13L484	108-5003-00			COIL,RF:	54583	NL453232T-120K
A13L516	108-5027-00			COIL,RF:	80009	108-5027-00
A13L549	108-5027-00			COIL,RF:	80009	108-5027-00
A13L577	108-5003-00			COIL,RF:	54583	NL453232T-120K
A13L587	108-5003-00			COIL,RF:	54583	NL453232T-120K

Component No.	Tektronix Part No.	Serial/Assembly No. Effective	Dscont	Name & Description	Mfr. Code	Mfr. Part No.
A13L592	108-1262-00			COIL,RF:FXD,100UH,10%,Q=30,SRF 8.2MHZ,DCR 0 .23 OHM,I MAX 0.75ARADIAL LEAD	80009	108-1262-00
A13L593	108-1262-00			COIL,RF:FXD,100UH,10%,Q=30,SRF 8.2MHZ,DCR 0 .23 OHM,I MAX 0.75ARADIAL LEAD	80009	108-1262-00
A13L687	108-5003-00			COIL,RF:	54583	NL453232T-120K
A13L710	108-1326-00			COIL,RF:FXD, TOROID, 2.1UH, +/-10%, DCR 0.0 65 OHM, Q=150@10MHZ,PKG DIA 0.5 X 0.2	0JR03	108-1326-00
A13L730	108-1326-00			COIL,RF:FXD, TOROID, 2.1UH, +/-10%, DCR 0.0 65 OHM, Q=150@10MHZ,PKG DIA 0.5 X 0.2	0JR03	108-1326-00
A13L810	108-1326-00			COIL,RF:FXD, TOROID, 2.1UH, +/-10%, DCR 0.0 65 OHM, Q=150@10MHZ,PKG DIA 0.5 X 0.2	0JR03	108-1326-00
A13L830	108-1326-00			COIL,RF:FXD, TOROID, 2.1UH, +/-10%, DCR 0.0 65 OHM, Q=150@10MHZ,PKG DIA 0.5 X 0.2	0JR03	108-1326-00
A13L910	108-1326-00			COIL,RF:FXD, TOROID, 2.1UH, +/-10%, DCR 0.0 65 OHM, Q=150@10MHZ,PKG DIA 0.5 X 0.2	0JR03	108-1326-00
A13L911	108-1326-00			COIL,RF:FXD, TOROID, 2.1UH, +/-10%, DCR 0.0 65 OHM, Q=150@10MHZ,PKG DIA 0.5 X 0.2	0JR03	108-1326-00
A13L920	108-1326-00			COIL,RF:FXD, TOROID, 2.1UH, +/-10%, DCR 0.0 65 OHM, Q=150@10MHZ,PKG DIA 0.5 X 0.2	0JR03	108-1326-00
A13L921	108-1326-00			COIL,RF:FXD, TOROID, 2.1UH, +/-10%, DCR 0.0 65 OHM, Q=150@10MHZ,PKG DIA 0.5 X 0.2	0JR03	108-1326-00
A13Q116	151-5005-00			TRANSISTOR,SIG:BIPOLAR,PNP;20V,1.0A,60MHZ,A MPLIFIER;BCX69/BC869,SOT-89,12MM T/R	04713	BCX69T1
A13Q136	151-5004-00			TRANSISTOR,SIG:BIPOLAR,NPN;20V,1.0A,65MHZ,A MPLIFIER;BCX68/BC868,SOT-89,12MM T/R	04713	BCX68
A13Q144	151-5004-00			TRANSISTOR,SIG:BIPOLAR,NPN;20V,1.0A,65MHZ,A MPLIFIER;BCX68/BC868,SOT-89,12MM T/R	04713	BCX68
A13Q145	151-5005-00			TRANSISTOR,SIG:BIPOLAR,PNP;20V,1.0A,60MHZ,A MPLIFIER;BCX69/BC869,SOT-89,12MM T/R	04713	BCX69T1
A13Q202	151-5009-00			TRANSISTOR,SIG:BIPOLAR,NPN;25V,300MA,1.2GHZ ,AMPLIFIER;BFQ17,SOT-89,12MM T/R	80009	151-5009-00
A13Q215	151-5004-00			TRANSISTOR,SIG:BIPOLAR,NPN;20V,1.0A,65MHZ,A MPLIFIER;BCX68/BC868,SOT-89,12MM T/R	04713	BCX68
A13Q233	151-5005-00			TRANSISTOR,SIG:BIPOLAR,PNP;20V,1.0A,60MHZ,A MPLIFIER;BCX69/BC869,SOT-89,12MM T/R	04713	BCX69T1
A13Q246	151-5004-00			TRANSISTOR,SIG:BIPOLAR,NPN;20V,1.0A,65MHZ,A MPLIFIER;BCX68/BC868,SOT-89,12MM T/R	04713	BCX68
A13Q260	151-5009-00			TRANSISTOR,SIG:BIPOLAR,NPN;25V,300MA,1.2GHZ ,AMPLIFIER;BFQ17,SOT-89,12MM T/R	80009	151-5009-00
A13Q264	151-5009-00			TRANSISTOR,SIG:BIPOLAR,NPN;25V,300MA,1.2GHZ ,AMPLIFIER;BFQ17,SOT-89,12MM T/R	80009	151-5009-00
A13Q275	151-5009-00			TRANSISTOR,SIG:BIPOLAR,NPN;25V,300MA,1.2GHZ ,AMPLIFIER;BFQ17,SOT-89,12MM T/R	80009	151-5009-00
A13Q285	151-5009-00			TRANSISTOR,SIG:BIPOLAR,NPN;25V,300MA,1.2GHZ ,AMPLIFIER;BFQ17,SOT-89,12MM T/R	80009	151-5009-00
A13Q298	151-5009-00			TRANSISTOR,SIG:BIPOLAR,NPN;25V,300MA,1.2GHZ ,AMPLIFIER;BFQ17,SOT-89,12MM T/R	80009	151-5009-00
A13Q310	151-5005-00			TRANSISTOR,SIG:BIPOLAR,PNP;20V,1.0A,60MHZ,A MPLIFIER;BCX69/BC869,SOT-89,12MM T/R	04713	BCX69T1
A13Q312	151-5005-00			TRANSISTOR,SIG:BIPOLAR,PNP;20V,1.0A,60MHZ,A MPLIFIER;BCX69/BC869,SOT-89,12MM T/R	04713	BCX69T1
A13Q328	151-5004-00			TRANSISTOR,SIG:BIPOLAR,NPN;20V,1.0A,65MHZ,A MPLIFIER;BCX68/BC868,SOT-89,12MM T/R	04713	BCX68
A13Q331	151-5004-00			TRANSISTOR,SIG:BIPOLAR,NPN;20V,1.0A,65MHZ,A MPLIFIER;BCX68/BC868,SOT-89,12MM T/R	04713	BCX68
A13Q332	151-5005-00			TRANSISTOR,SIG:BIPOLAR,PNP;20V,1.0A,60MHZ,A MPLIFIER;BCX69/BC869,SOT-89,12MM T/R	04713	BCX69T1
A13Q340	151-5004-00			TRANSISTOR,SIG:BIPOLAR,NPN;20V,1.0A,65MHZ,A MPLIFIER;BCX68/BC868,SOT-89,12MM T/R	04713	BCX68

Component No.	Tektronix Part No.	Serial/Assembly No. Effective	Dscont	Name & Description	Mfr. Code	Mfr. Part No.
A13Q341	151-5016-00			TRANSISTOR,SIG:BIPOLAR,PNP;20V,30MA,600MHZ, AMPLIFIER;MMBTH81L,TO-236/SOT-23,8MM T&R	80009	151-5016-00
A13Q350	151-5001-00			TRANSISTOR,SIG:BIPOLAR,NPN;40V,200MA,300MHZ ,AMPLIFIER;MMBT3904L,TO-236/SOT-23,8MM T&R	80009	151-5001-00
A13Q351	151-5016-00			TRANSISTOR,SIG:BIPOLAR,PNP;20V,30MA,600MHZ, AMPLIFIER;MMBTH81L,TO-236/SOT-23,8MM T&R	80009	151-5016-00
A13Q352	151-5004-00			TRANSISTOR,SIG:BIPOLAR,NPN;20V,1.0A,65MHZ,A MPLIFIER;BCX68/BC868,SOT-89,12MM T/R	04713	BCX68
A13Q360	151-5004-00			TRANSISTOR,SIG:BIPOLAR,NPN;20V,1.0A,65MHZ,A MPLIFIER;BCX68/BC868,SOT-89,12MM T/R	04713	BCX68
A13Q370	151-5004-00			TRANSISTOR,SIG:BIPOLAR,NPN;20V,1.0A,65MHZ,A MPLIFIER;BCX68/BC868,SOT-89,12MM T/R	04713	BCX68
A13Q385	151-5004-00			TRANSISTOR,SIG:BIPOLAR,NPN;20V,1.0A,65MHZ,A MPLIFIER;BCX68/BC868,SOT-89,12MM T/R	04713	BCX68
A13Q411	151-5005-00			TRANSISTOR,SIG:BIPOLAR,PNP;20V,1.0A,60MHZ,A MPLIFIER;BCX69/BC869,SOT-89,12MM T/R	04713	BCX69T1
A13Q414	151-5004-00			TRANSISTOR,SIG:BIPOLAR,NPN;20V,1.0A,65MHZ,A MPLIFIER;BCX68/BC868,SOT-89,12MM T/R	04713	BCX68
A13Q440	151-5005-00			TRANSISTOR,SIG:BIPOLAR,PNP;20V,1.0A,60MHZ,A MPLIFIER;BCX69/BC869,SOT-89,12MM T/R	04713	BCX69T1
A13Q441	151-5001-00			TRANSISTOR,SIG:BIPOLAR,NPN;40V,200MA,300MHZ ,AMPLIFIER;MMBT3904L,TO-236/SOT-23,8MM T&R	80009	151-5001-00
A13Q442	151-5000-00			TRANSISTOR,SIG:BIPOLAR,PNP;40V,200MA,250MHZ ,AMPLIFIER;MMBT3906L,TO-236/SOT-23,8MM T&R	04713	MMBT3906LT1
A13Q460	151-5004-00			TRANSISTOR,SIG:BIPOLAR,NPN;20V,1.0A,65MHZ,A MPLIFIER;BCX68/BC868,SOT-89,12MM T/R	04713	BCX68
A13Q461	151-5004-00			TRANSISTOR,SIG:BIPOLAR,NPN;20V,1.0A,65MHZ,A MPLIFIER;BCX68/BC868,SOT-89,12MM T/R	04713	BCX68
A13Q476	151-5004-00			TRANSISTOR,SIG:BIPOLAR,NPN;20V,1.0A,65MHZ,A MPLIFIER;BCX68/BC868,SOT-89,12MM T/R	04713	BCX68
A13Q486	151-5004-00			TRANSISTOR,SIG:BIPOLAR,NPN;20V,1.0A,65MHZ,A MPLIFIER;BCX68/BC868,SOT-89,12MM T/R	04713	BCX68
A13Q490	151-5004-00			TRANSISTOR,SIG:BIPOLAR,NPN;20V,1.0A,65MHZ,A MPLIFIER;BCX68/BC868,SOT-89,12MM T/R	04713	BCX68
A13Q491	151-5004-00			TRANSISTOR,SIG:BIPOLAR,NPN;20V,1.0A,65MHZ,A MPLIFIER;BCX68/BC868,SOT-89,12MM T/R	04713	BCX68
A13Q504	151-5001-00			TRANSISTOR,SIG:BIPOLAR,NPN;40V,200MA,300MHZ ,AMPLIFIER;MMBT3904L,TO-236/SOT-23,8MM T&R	80009	151-5001-00
A13Q511	151-5004-00			TRANSISTOR,SIG:BIPOLAR,NPN;20V,1.0A,65MHZ,A MPLIFIER;BCX68/BC868,SOT-89,12MM T/R	04713	BCX68
A13Q536	151-5004-00			TRANSISTOR,SIG:BIPOLAR,NPN;20V,1.0A,65MHZ,A MPLIFIER;BCX68/BC868,SOT-89,12MM T/R	04713	BCX68
A13Q537	151-5005-00			TRANSISTOR,SIG:BIPOLAR,PNP;20V,1.0A,60MHZ,A MPLIFIER;BCX69/BC869,SOT-89,12MM T/R	04713	BCX69T1
A13Q543	151-5000-00			TRANSISTOR,SIG:BIPOLAR,PNP;40V,200MA,250MHZ ,AMPLIFIER;MMBT3906L,TO-236/SOT-23,8MM T&R	04713	MMBT3906LT1
A13Q547	151-5000-00			TRANSISTOR,SIG:BIPOLAR,PNP;40V,200MA,250MHZ ,AMPLIFIER;MMBT3906L,TO-236/SOT-23,8MM T&R	04713	MMBT3906LT1
A13Q586	151-5000-00			TRANSISTOR,SIG:BIPOLAR,PNP;40V,200MA,250MHZ ,AMPLIFIER;MMBT3906L,TO-236/SOT-23,8MM T&R	04713	MMBT3906LT1
A13Q603	151-5005-00			TRANSISTOR,SIG:BIPOLAR,PNP;20V,1.0A,60MHZ,A MPLIFIER;BCX69/BC869,SOT-89,12MM T/R	04713	BCX69T1
A13Q604	151-5004-00			TRANSISTOR,SIG:BIPOLAR,NPN;20V,1.0A,65MHZ,A MPLIFIER;BCX68/BC868,SOT-89,12MM T/R	04713	BCX68
A13Q643	151-5000-00			TRANSISTOR,SIG:BIPOLAR,PNP;40V,200MA,250MHZ ,AMPLIFIER;MMBT3906L,TO-236/SOT-23,8MM T&R	04713	MMBT3906LT1
A13Q649	151-5000-00			TRANSISTOR,SIG:BIPOLAR,PNP;40V,200MA,250MHZ ,AMPLIFIER;MMBT3906L,TO-236/SOT-23,8MM T&R	04713	MMBT3906LT1

Component No.	Tektronix Part No.	Serial/Assembly No. Effective	Dscont	Name & Description	Mfr. Code	Mfr. Part No.
A13R100	321-5014-00			RES,FXD:METAL FILM;475 OHM,1%,0.125W,TC=100 PPM;1206,T&R	80009	321-5014-00
A13R101	321-5014-00			RES,FXD:METAL FILM;475 OHM,1%,0.125W,TC=100 PPM;1206,T&R	80009	321-5014-00
A13R102	321-5000-00			RES,FXD:METAL FILM;10 OHM,1%,0.125W,TC=100 PPM;1206,T&R	57668	MCR18EZHFW10E
A13R107	321-5018-00			RES,FXD:METAL FILM;1.0K OHM,1%,0.125W,TC=10 0 PPM;1206,T&R	80009	321-5018-00
A13R113	321-5018-00			RES,FXD:METAL FILM;1.0K OHM,1%,0.125W,TC=10 0 PPM;1206,T&R	80009	321-5018-00
A13R130	321-5009-00	B010100	B010177	RES,FXD:METAL FILM;182 OHM,1%,0.125W,TC=100 PPM;1206,T&R	80009	321-5009-00
A13R130	321-5010-00	B010178		RES,FXD:METAL FILM;221 OHM,1%,0.125W,TC=100 PPM;1206,T&R	80009	321-5010-00
A13R131	321-5009-00	B010100	B010177	RES,FXD:METAL FILM;182 OHM,1%,0.125W,TC=100 PPM;1206,T&R	80009	321-5009-00
A13R131	321-5010-00	B010178		RES,FXD:METAL FILM;221 OHM,1%,0.125W,TC=100 PPM;1206,T&R	80009	321-5010-00
A13R132	321-5005-00	B010100	B010177	RES,FXD:METAL FILM;27.4 OHM,1%,0.125W,TC=10 0 PPM;1206,T&R	80009	321-5005-00
A13R132	321-5004-00	B010178		RES,FXD:METAL FILM;22.1 OHM,1%,0.125W,TC=10 0 PPM;1206,T&R	80009	321-5004-00
A13R134	321-5018-00			RES,FXD:METAL FILM;1.0K OHM,1%,0.125W,TC=10 0 PPM;1206,T&R	80009	321-5018-00
A13R140	321-5018-00			RES,FXD:METAL FILM;1.0K OHM,1%,0.125W,TC=10 0 PPM;1206,T&R	80009	321-5018-00
A13R142	321-5018-00			RES,FXD:METAL FILM;1.0K OHM,1%,0.125W,TC=10 0 PPM;1206,T&R	80009	321-5018-00
A13R143	321-5018-00			RES,FXD:METAL FILM;1.0K OHM,1%,0.125W,TC=10 0 PPM;1206,T&R	80009	321-5018-00
A13R145	321-5018-00			RES,FXD:METAL FILM;1.0K OHM,1%,0.125W,TC=10 0 PPM;1206,T&R	80009	321-5018-00
A13R146	321-5001-00			RES,FXD:METAL FILM;12.1 OHM,1%,0.125W,TC=10 0 PPM;1206,T&R	57668	MCR18EZHFW 12E1
A13R148	321-5013-00			RES,FXD:METAL FILM;392 OHM,1%,0.125W,TC=100 PPM;1206,T&R	80009	321-5013-00
A13R149	321-5013-00			RES,FXD:METAL FILM;392 OHM,1%,0.125W,TC=100 PPM;1206,T&R	80009	321-5013-00
A13R150	321-5010-00			RES,FXD:METAL FILM;221 OHM,1%,0.125W,TC=100 PPM;1206,T&R	80009	321-5010-00
A13R151	321-5004-00			RES,FXD:METAL FILM;22.1 OHM,1%,0.125W,TC=10 0 PPM;1206,T&R	80009	321-5004-00
A13R152	321-5010-00			RES,FXD:METAL FILM;221 OHM,1%,0.125W,TC=100 PPM;1206,T&R	80009	321-5010-00
A13R160	321-5009-00			RES,FXD:METAL FILM;182 OHM,1%,0.125W,TC=100 PPM;1206,T&R	80009	321-5009-00
A13R161	321-5018-00			RES,FXD:METAL FILM;1.0K OHM,1%,0.125W,TC=10 0 PPM;1206,T&R	80009	321-5018-00
A13R162	321-5018-00			RES,FXD:METAL FILM;1.0K OHM,1%,0.125W,TC=10 0 PPM;1206,T&R	80009	321-5018-00
A13R163	321-5014-00			RES,FXD:METAL FILM;475 OHM,1%,0.125W,TC=100 PPM;1206,T&R	80009	321-5014-00
A13R167	321-5050-00			RES,FXD:METAL FILM;33.2 OHM,1%,0.125W,TC=10 0 PPM;1206,T&R	57668	MCR18FWEA33E2
A13R174	321-5018-00			RES,FXD:METAL FILM;1.0K OHM,1%,0.125W,TC=10 0 PPM;1206,T&R	80009	321-5018-00
A13R175	321-5014-00			RES,FXD:METAL FILM;475 OHM,1%,0.125W,TC=100 PPM;1206,T&R	80009	321-5014-00

Component No.	Tektronix Part No.	Serial/Assembly No. Effective	Dscont	Name & Description	Mfr. Code	Mfr. Part No.
A13R176	321-5018-00			RES,FXD:METAL FILM;1.0K OHM,1%,0.125W,TC=100 PPM;1206,T&R	80009	321-5018-00
A13R177	321-5050-00			RES,FXD:METAL FILM;33.2 OHM,1%,0.125W,TC=100 PPM;1206,T&R	57668	MCR18FWEA33E2
A13R178	321-5050-00			RES,FXD:METAL FILM;33.2 OHM,1%,0.125W,TC=100 PPM;1206,T&R	57668	MCR18FWEA33E2
A13R180	321-5018-00			RES,FXD:METAL FILM;1.0K OHM,1%,0.125W,TC=100 PPM;1206,T&R	80009	321-5018-00
A13R181	321-5018-00			RES,FXD:METAL FILM;1.0K OHM,1%,0.125W,TC=100 PPM;1206,T&R	80009	321-5018-00
A13R184	321-5014-00			RES,FXD:METAL FILM;475 OHM,1%,0.125W,TC=100 PPM;1206,T&R	80009	321-5014-00
A13R185	321-5018-00			RES,FXD:METAL FILM;1.0K OHM,1%,0.125W,TC=100 PPM;1206,T&R	80009	321-5018-00
A13R186	321-5018-00			RES,FXD:METAL FILM;1.0K OHM,1%,0.125W,TC=100 PPM;1206,T&R	80009	321-5018-00
A13R188	321-5050-00			RES,FXD:METAL FILM;33.2 OHM,1%,0.125W,TC=100 PPM;1206,T&R	57668	MCR18FWEA33E2
A13R200	321-5018-00			RES,FXD:METAL FILM;1.0K OHM,1%,0.125W,TC=100 PPM;1206,T&R	80009	321-5018-00
A13R203	321-5018-00			RES,FXD:METAL FILM;1.0K OHM,1%,0.125W,TC=100 PPM;1206,T&R	80009	321-5018-00
A13R204	321-5000-00			RES,FXD:METAL FILM;10 OHM,1%,0.125W,TC=100 PPM;1206,T&R	57668	MCR18EZHFW10E
A13R207	321-5050-00			RES,FXD:METAL FILM;33.2 OHM,1%,0.125W,TC=100 PPM;1206,T&R	57668	MCR18FWEA33E2
A13R213	321-5018-00			RES,FXD:METAL FILM;1.0K OHM,1%,0.125W,TC=100 PPM;1206,T&R	80009	321-5018-00
A13R235	321-5018-00			RES,FXD:METAL FILM;1.0K OHM,1%,0.125W,TC=100 PPM;1206,T&R	80009	321-5018-00
A13R237	321-5018-00			RES,FXD:METAL FILM;1.0K OHM,1%,0.125W,TC=100 PPM;1206,T&R	80009	321-5018-00
A13R243	321-5000-00			RES,FXD:METAL FILM;10 OHM,1%,0.125W,TC=100 PPM;1206,T&R	57668	MCR18EZHFW10E
A13R244	321-5047-00			RES,FXD:METAL FILM;100K OHM,1%,0.125W,TC=100 PPM;1206,T&R	80009	321-5047-00
A13R245	321-5018-00			RES,FXD:METAL FILM;1.0K OHM,1%,0.125W,TC=100 PPM;1206,T&R	80009	321-5018-00
A13R247	321-5018-00			RES,FXD:METAL FILM;1.0K OHM,1%,0.125W,TC=100 PPM;1206,T&R	80009	321-5018-00
A13R250	321-5014-00			RES,FXD:METAL FILM;475 OHM,1%,0.125W,TC=100 PPM;1206,T&R	80009	321-5014-00
A13R251	321-5015-00			RES,FXD:METAL FILM;562 OHM,1%,0.125W,TC=100 PPM;1206,T&R	80009	321-5015-00
A13R253	321-5000-00			RES,FXD:METAL FILM;10 OHM,1%,0.125W,TC=100 PPM;1206,T&R	57668	MCR18EZHFW10E
A13R265	321-5018-00			RES,FXD:METAL FILM;1.0K OHM,1%,0.125W,TC=100 PPM;1206,T&R	80009	321-5018-00
A13R266	321-5000-00			RES,FXD:METAL FILM;10 OHM,1%,0.125W,TC=100 PPM;1206,T&R	57668	MCR18EZHFW10E
A13R273	321-5018-00			RES,FXD:METAL FILM;1.0K OHM,1%,0.125W,TC=100 PPM;1206,T&R	80009	321-5018-00
A13R274	321-5000-00			RES,FXD:METAL FILM;10 OHM,1%,0.125W,TC=100 PPM;1206,T&R	57668	MCR18EZHFW10E
A13R284	321-5018-00			RES,FXD:METAL FILM;1.0K OHM,1%,0.125W,TC=100 PPM;1206,T&R	80009	321-5018-00
A13R285	321-5000-00			RES,FXD:METAL FILM;10 OHM,1%,0.125W,TC=100 PPM;1206,T&R	57668	MCR18EZHFW10E

Component No.	Tektronix Part No.	Serial/Assembly No. Effective	Dscont	Name & Description	Mfr. Code	Mfr. Part No.
A13R286	321-5018-00			RES,FXD:METAL FILM;1.0K OHM,1%,0.125W,TC=100 PPM;1206,T&R	80009	321-5018-00
A13R294	321-5009-00			RES,FXD:METAL FILM;182 OHM,1%,0.125W,TC=100 PPM;1206,T&R	80009	321-5009-00
A13R295	321-5018-00			RES,FXD:METAL FILM;1.0K OHM,1%,0.125W,TC=100 PPM;1206,T&R	80009	321-5018-00
A13R296	321-5051-00			RES,FXD:METAL FILM;0 OHM,1%,0.125W,TC=100 PPM;1206,T&R	80009	321-5051-00
A13R297	321-5018-00			RES,FXD:METAL FILM;1.0K OHM,1%,0.125W,TC=100 PPM;1206,T&R	80009	321-5018-00
A13R299	321-5050-00			RES,FXD:METAL FILM;33.2 OHM,1%,0.125W,TC=100 PPM;1206,T&R	57668	MCR18FWEA33E2
A13R301	321-5018-00			RES,FXD:METAL FILM;1.0K OHM,1%,0.125W,TC=100 PPM;1206,T&R	80009	321-5018-00
A13R304	321-5018-00			RES,FXD:METAL FILM;1.0K OHM,1%,0.125W,TC=100 PPM;1206,T&R	80009	321-5018-00
A13R313	321-5018-00			RES,FXD:METAL FILM;1.0K OHM,1%,0.125W,TC=100 PPM;1206,T&R	80009	321-5018-00
A13R316	321-5018-00			RES,FXD:METAL FILM;1.0K OHM,1%,0.125W,TC=100 PPM;1206,T&R	80009	321-5018-00
A13R318	321-5018-00			RES,FXD:METAL FILM;1.0K OHM,1%,0.125W,TC=100 PPM;1206,T&R	80009	321-5018-00
A13R320	321-5018-00			RES,FXD:METAL FILM;1.0K OHM,1%,0.125W,TC=100 PPM;1206,T&R	80009	321-5018-00
A13R323	321-5009-00			RES,FXD:METAL FILM;182 OHM,1%,0.125W,TC=100 PPM;1206,T&R	80009	321-5009-00
A13R324	321-5043-00			RES,FXD:METAL FILM;47.5 OHM,1%,0.125W,TC=100 PPM;1206,T&R	80009	321-5043-00
A13R335	321-5011-00	B010178		RES,FXD:METAL FILM;274 OHM,1%,0.125W,TC=100 PPM;1206,T&R	80009	321-5011-00
A13R336	321-5018-00			RES,FXD:METAL FILM;1.0K OHM,1%,0.125W,TC=100 PPM;1206,T&R	80009	321-5018-00
A13R340	321-5018-00			RES,FXD:METAL FILM;1.0K OHM,1%,0.125W,TC=100 PPM;1206,T&R	80009	321-5018-00
A13R345	321-5018-00			RES,FXD:METAL FILM;1.0K OHM,1%,0.125W,TC=100 PPM;1206,T&R	80009	321-5018-00
A13R346	321-5018-00			RES,FXD:METAL FILM;1.0K OHM,1%,0.125W,TC=100 PPM;1206,T&R	80009	321-5018-00
A13R347	321-5018-00			RES,FXD:METAL FILM;1.0K OHM,1%,0.125W,TC=100 PPM;1206,T&R	80009	321-5018-00
A13R348	321-5000-00			RES,FXD:METAL FILM;10 OHM,1%,0.125W,TC=100 PPM;1206,T&R	57668	MCR18EZHFW10E
A13R349	321-5014-00			RES,FXD:METAL FILM;475 OHM,1%,0.125W,TC=100 PPM;1206,T&R	80009	321-5014-00
A13R350	321-5043-00			RES,FXD:METAL FILM;47.5 OHM,1%,0.125W,TC=100 PPM;1206,T&R	80009	321-5043-00
A13R351	321-5000-00			RES,FXD:METAL FILM;10 OHM,1%,0.125W,TC=100 PPM;1206,T&R	57668	MCR18EZHFW10E
A13R352	321-5047-00			RES,FXD:METAL FILM;100K OHM,1%,0.125W,TC=100 PPM;1206,T&R	80009	321-5047-00
A13R353	321-5015-00			RES,FXD:METAL FILM;562 OHM,1%,0.125W,TC=100 PPM;1206,T&R	80009	321-5015-00
A13R354	321-5000-00			RES,FXD:METAL FILM;10 OHM,1%,0.125W,TC=100 PPM;1206,T&R	57668	MCR18EZHFW10E
A13R355	321-5018-00			RES,FXD:METAL FILM;1.0K OHM,1%,0.125W,TC=100 PPM;1206,T&R	80009	321-5018-00
A13R360	321-5045-00			RES,FXD:METAL FILM;68.1 OHM,1%,0.125W,TC=100 PPM;1206,T&R	80009	321-5045-00

Component No.	Tektronix Part No.	Serial/Assembly No. Effective	Dscont	Name & Description	Mfr. Code	Mfr. Part No.
A13R361	321-5015-00			RES,FXD:METAL FILM;562 OHM,1%,0.125W,TC=100 PPM;1206,T&R	80009	321-5015-00
A13R362	321-5018-00			RES,FXD:METAL FILM;1.0K OHM,1%,0.125W,TC=10 0 PPM;1206,T&R	80009	321-5018-00
A13R363	321-5047-00			RES,FXD:METAL FILM;100K OHM,1%,0.125W,TC=10 0 PPM;1206,T&R	80009	321-5047-00
A13R364	321-5047-00			RES,FXD:METAL FILM;100K OHM,1%,0.125W,TC=10 0 PPM;1206,T&R	80009	321-5047-00
A13R365	321-5015-00			RES,FXD:METAL FILM;562 OHM,1%,0.125W,TC=100 PPM;1206,T&R	80009	321-5015-00
A13R366	321-5000-00			RES,FXD:METAL FILM;10 OHM,1%,0.125W,TC=100 PPM;1206,T&R	57668	MCR18EZHFW10E
A13R367	321-5045-00			RES,FXD:METAL FILM;68.1 OHM,1%,0.125W,TC=10 0 PPM;1206,T&R	80009	321-5045-00
A13R368	321-5018-00			RES,FXD:METAL FILM;1.0K OHM,1%,0.125W,TC=10 0 PPM;1206,T&R	80009	321-5018-00
A13R369	321-5018-00			RES,FXD:METAL FILM;1.0K OHM,1%,0.125W,TC=10 0 PPM;1206,T&R	80009	321-5018-00
A13R370	321-5015-00			RES,FXD:METAL FILM;562 OHM,1%,0.125W,TC=100 PPM;1206,T&R	80009	321-5015-00
A13R371	321-5047-00			RES,FXD:METAL FILM;100K OHM,1%,0.125W,TC=10 0 PPM;1206,T&R	80009	321-5047-00
A13R372	321-5047-00			RES,FXD:METAL FILM;100K OHM,1%,0.125W,TC=10 0 PPM;1206,T&R	80009	321-5047-00
A13R373	321-5015-00			RES,FXD:METAL FILM;562 OHM,1%,0.125W,TC=100 PPM;1206,T&R	80009	321-5015-00
A13R374	321-5045-00			RES,FXD:METAL FILM;68.1 OHM,1%,0.125W,TC=10 0 PPM;1206,T&R	80009	321-5045-00
A13R375	321-5000-00			RES,FXD:METAL FILM;10 OHM,1%,0.125W,TC=100 PPM;1206,T&R	57668	MCR18EZHFW10E
A13R376	321-5015-00			RES,FXD:METAL FILM;562 OHM,1%,0.125W,TC=100 PPM;1206,T&R	80009	321-5015-00
A13R377	321-5018-00			RES,FXD:METAL FILM;1.0K OHM,1%,0.125W,TC=10 0 PPM;1206,T&R	80009	321-5018-00
A13R378	321-5018-00			RES,FXD:METAL FILM;1.0K OHM,1%,0.125W,TC=10 0 PPM;1206,T&R	80009	321-5018-00
A13R380	321-5047-00			RES,FXD:METAL FILM;100K OHM,1%,0.125W,TC=10 0 PPM;1206,T&R	80009	321-5047-00
A13R381	321-5047-00			RES,FXD:METAL FILM;100K OHM,1%,0.125W,TC=10 0 PPM;1206,T&R	80009	321-5047-00
A13R382	321-5015-00			RES,FXD:METAL FILM;562 OHM,1%,0.125W,TC=100 PPM;1206,T&R	80009	321-5015-00
A13R383	321-5000-00			RES,FXD:METAL FILM;10 OHM,1%,0.125W,TC=100 PPM;1206,T&R	57668	MCR18EZHFW10E
A13R384	321-5045-00			RES,FXD:METAL FILM;68.1 OHM,1%,0.125W,TC=10 0 PPM;1206,T&R	80009	321-5045-00
A13R385	321-5015-00			RES,FXD:METAL FILM;562 OHM,1%,0.125W,TC=100 PPM;1206,T&R	80009	321-5015-00
A13R386	321-5047-00			RES,FXD:METAL FILM;100K OHM,1%,0.125W,TC=10 0 PPM;1206,T&R	80009	321-5047-00
A13R387	321-5018-00			RES,FXD:METAL FILM;1.0K OHM,1%,0.125W,TC=10 0 PPM;1206,T&R	80009	321-5018-00
A13R388	321-5018-00			RES,FXD:METAL FILM;1.0K OHM,1%,0.125W,TC=10 0 PPM;1206,T&R	80009	321-5018-00
A13R391	321-5015-00			RES,FXD:METAL FILM;562 OHM,1%,0.125W,TC=100 PPM;1206,T&R	80009	321-5015-00
A13R392	321-5047-00			RES,FXD:METAL FILM;100K OHM,1%,0.125W,TC=10 0 PPM;1206,T&R	80009	321-5047-00

Component No.	Tektronix Part No.	Serial/Assembly No. Effective	Dscont	Name & Description	Mfr. Code	Mfr. Part No.
A13R393	321-5000-00			RES,FXD:METAL FILM;10 OHM,1%,0.125W,TC=100 PPM;1206,T&R	57668	MCR18EZHFW10E
A13R394	321-5045-00			RES,FXD:METAL FILM;68.1 OHM,1%,0.125W,TC=10 0 PPM;1206,T&R	80009	321-5045-00
A13R395	321-5018-00			RES,FXD:METAL FILM;1.0K OHM,1%,0.125W,TC=10 0 PPM;1206,T&R	80009	321-5018-00
A13R398	321-5000-00			RES,FXD:METAL FILM;10 OHM,1%,0.125W,TC=100 PPM;1206,T&R	57668	MCR18EZHFW10E
A13R403	321-5030-00			RES,FXD:METAL FILM;10.0K OHM,1%,0.125W,TC=1 00 PPM;1206,T&R	80009	321-5030-00
A13R404	321-5018-00			RES,FXD:METAL FILM;1.0K OHM,1%,0.125W,TC=10 0 PPM;1206,T&R	80009	321-5018-00
A13R410	321-5018-00			RES,FXD:METAL FILM;1.0K OHM,1%,0.125W,TC=10 0 PPM;1206,T&R	80009	321-5018-00
A13R423	321-5007-00			RES,FXD:METAL FILM;121 OHM,1%,0.125W,TC=100 PPM;1206,T&R	80009	321-5007-00
A13R434	321-5018-00			RES,FXD:METAL FILM;1.0K OHM,1%,0.125W,TC=10 0 PPM;1206,T&R	80009	321-5018-00
A13R438	321-5051-00	B010100	B010177	RES,FXD:METAL FILM;0 OHM,1%,0.125W,TC=100 P PM;1206,T&R	80009	321-5051-00
A13R438	321-5003-00	B010178		RES,FXD:METAL FILM;18.2 OHM,1%,0.125W,TC=10 0 PPM;1206,T&R	57668	MCR18EZHFW 18E2
A13R439	321-5011-00	B010178		RES,FXD:METAL FILM;274 OHM,1%,0.125W,TC=100 PPM;1206,T&R	80009	321-5011-00
A13R440	321-5015-00			RES,FXD:METAL FILM;562 OHM,1%,0.125W,TC=100 PPM;1206,T&R	80009	321-5015-00
A13R441	321-5008-00			RES,FXD:METAL FILM;150 OHM,1%,0.125W,TC=100 PPM;1206,T&R	80009	321-5008-00
A13R442	321-5017-00			RES,FXD:METAL FILM;825 OHM,1%,0.125W,TC=100 PPM;1206,T&R	80009	321-5017-00
A13R444	321-5043-00			RES,FXD:METAL FILM;47.5 OHM,1%,0.125W,TC=10 0 PPM;1206,T&R	80009	321-5043-00
A13R445	321-5014-00			RES,FXD:METAL FILM;475 OHM,1%,0.125W,TC=100 PPM;1206,T&R	80009	321-5014-00
A13R448	321-5018-00			RES,FXD:METAL FILM;1.0K OHM,1%,0.125W,TC=10 0 PPM;1206,T&R	80009	321-5018-00
A13R451	321-5011-00			RES,FXD:METAL FILM;274 OHM,1%,0.125W,TC=100 PPM;1206,T&R	80009	321-5011-00
A13R452	321-5018-00			RES,FXD:METAL FILM;1.0K OHM,1%,0.125W,TC=10 0 PPM;1206,T&R	80009	321-5018-00
A13R453	321-5004-00			RES,FXD:METAL FILM;22.1 OHM,1%,0.125W,TC=10 0 PPM;1206,T&R	80009	321-5004-00
A13R454	321-5018-00			RES,FXD:METAL FILM;1.0K OHM,1%,0.125W,TC=10 0 PPM;1206,T&R	80009	321-5018-00
A13R455	321-5000-00			RES,FXD:METAL FILM;10 OHM,1%,0.125W,TC=100 PPM;1206,T&R	57668	MCR18EZHFW10E
A13R456	321-5043-00			RES,FXD:METAL FILM;47.5 OHM,1%,0.125W,TC=10 0 PPM;1206,T&R	80009	321-5043-00
A13R471	321-5018-00			RES,FXD:METAL FILM;1.0K OHM,1%,0.125W,TC=10 0 PPM;1206,T&R	80009	321-5018-00
A13R484	321-5044-00			RES,FXD:METAL FILM;56.2 OHM,1%,0.125W,TC=10 0 PPM;1206,T&R	01121	BCD56R2FT
A13R492	321-5018-00			RES,FXD:METAL FILM;1.0K OHM,1%,0.125W,TC=10 0 PPM;1206,T&R	80009	321-5018-00
A13R493	321-5018-00			RES,FXD:METAL FILM;1.0K OHM,1%,0.125W,TC=10 0 PPM;1206,T&R	80009	321-5018-00
A13R494	321-5047-00			RES,FXD:METAL FILM;100K OHM,1%,0.125W,TC=10 0 PPM;1206,T&R	80009	321-5047-00

Component No.	Tektronix Part No.	Serial/Assembly No. Effective	Dscont	Name & Description	Mfr. Code	Mfr. Part No.
A13R498	321-5018-00			RES,FXD:METAL FILM;1.0K OHM,1%,0.125W,TC=100 PPM;1206,T&R	80009	321-5018-00
A13R501	321-5010-00			RES,FXD:METAL FILM;221 OHM,1%,0.125W,TC=100 PPM;1206,T&R	80009	321-5010-00
A13R502	321-5018-00			RES,FXD:METAL FILM;1.0K OHM,1%,0.125W,TC=100 PPM;1206,T&R	80009	321-5018-00
A13R503	321-5030-00			RES,FXD:METAL FILM;10.0K OHM,1%,0.125W,TC=100 PPM;1206,T&R	80009	321-5030-00
A13R530	321-5013-00	B010100	B010177	RES,FXD:METAL FILM;392 OHM,1%,0.125W,TC=100 PPM;1206,T&R	80009	321-5013-00
A13R530	321-5014-00	B010178		RES,FXD:METAL FILM;475 OHM,1%,0.125W,TC=100 PPM;1206,T&R	80009	321-5014-00
A13R531	321-5001-00	B010100	B010177	RES,FXD:METAL FILM;12.1 OHM,1%,0.125W,TC=100 PPM;1206,T&R	57668	MCR18EZHFW 12E1
A13R531	321-5000-00	B010178		RES,FXD:METAL FILM;10 OHM,1%,0.125W,TC=100 PPM;1206,T&R	57668	MCR18EZHFW10E
A13R532	321-5013-00	B010100	B010177	RES,FXD:METAL FILM;392 OHM,1%,0.125W,TC=100 PPM;1206,T&R	80009	321-5013-00
A13R532	321-5014-00	B010178		RES,FXD:METAL FILM;475 OHM,1%,0.125W,TC=100 PPM;1206,T&R	80009	321-5014-00
A13R538	321-5018-00			RES,FXD:METAL FILM;1.0K OHM,1%,0.125W,TC=100 PPM;1206,T&R	80009	321-5018-00
A13R540	321-5018-00			RES,FXD:METAL FILM;1.0K OHM,1%,0.125W,TC=100 PPM;1206,T&R	80009	321-5018-00
A13R541	321-5045-00			RES,FXD:METAL FILM;68.1 OHM,1%,0.125W,TC=100 PPM;1206,T&R	80009	321-5045-00
A13R544	321-5007-00			RES,FXD:METAL FILM;121 OHM,1%,0.125W,TC=100 PPM;1206,T&R	80009	321-5007-00
A13R545	321-5016-00			RES,FXD:METAL FILM;681 OHM,1%,0.125W,TC=100 PPM;1206,T&R	01121	BCK6810FT
A13R548	321-5018-00			RES,FXD:METAL FILM;1.0K OHM,1%,0.125W,TC=100 PPM;1206,T&R	80009	321-5018-00
A13R550	321-5047-00			RES,FXD:METAL FILM;100K OHM,1%,0.125W,TC=100 PPM;1206,T&R	80009	321-5047-00
A13R551	321-5018-00			RES,FXD:METAL FILM;1.0K OHM,1%,0.125W,TC=100 PPM;1206,T&R	80009	321-5018-00
A13R552	321-5047-00			RES,FXD:METAL FILM;100K OHM,1%,0.125W,TC=100 PPM;1206,T&R	80009	321-5047-00
A13R553	321-5018-00			RES,FXD:METAL FILM;1.0K OHM,1%,0.125W,TC=100 PPM;1206,T&R	80009	321-5018-00
A13R554	321-5047-00			RES,FXD:METAL FILM;100K OHM,1%,0.125W,TC=100 PPM;1206,T&R	80009	321-5047-00
A13R561	321-5023-00			RES,FXD:METAL FILM;2.74K OHM,1%,0.125W,TC=100 PPM;1206,T&R	80009	321-5023-00
A13R562	321-5000-00			RES,FXD:METAL FILM;10 OHM,1%,0.125W,TC=100 PPM;1206,T&R	57668	MCR18EZHFW10E
A13R563	321-5023-00			RES,FXD:METAL FILM;2.74K OHM,1%,0.125W,TC=100 PPM;1206,T&R	80009	321-5023-00
A13R571	321-5047-00			RES,FXD:METAL FILM;100K OHM,1%,0.125W,TC=100 PPM;1206,T&R	80009	321-5047-00
A13R572	321-5018-00			RES,FXD:METAL FILM;1.0K OHM,1%,0.125W,TC=100 PPM;1206,T&R	80009	321-5018-00
A13R573	321-5018-00			RES,FXD:METAL FILM;1.0K OHM,1%,0.125W,TC=100 PPM;1206,T&R	80009	321-5018-00
A13R574	321-5047-00			RES,FXD:METAL FILM;100K OHM,1%,0.125W,TC=100 PPM;1206,T&R	80009	321-5047-00
A13R575	321-5047-00			RES,FXD:METAL FILM;100K OHM,1%,0.125W,TC=100 PPM;1206,T&R	80009	321-5047-00

Component No.	Tektronix Part No.	Serial/Assembly No. Effective	Dscont	Name & Description	Mfr. Code	Mfr. Part No.
A13R580	321-5025-00			RES,FXD:METAL FILM;3.92K OHM,1%,0.125W,TC=100 PPM;1206,T&R	80009	321-5025-00
A13R581	321-5019-00			RES,FXD:METAL FILM;1.21K OHM,1%,0.125W,TC=100 PPM;1206,T&R	80009	321-5019-00
A13R582	321-5010-00			RES,FXD:METAL FILM;221 OHM,1%,0.125W,TC=100 PPM;1206,T&R	80009	321-5010-00
A13R583	321-5044-00			RES,FXD:METAL FILM;56.2 OHM,1%,0.125W,TC=100 PPM;1206,T&R	01121	BCD56R2FT
A13R605	321-5018-00			RES,FXD:METAL FILM;1.0K OHM,1%,0.125W,TC=100 PPM;1206,T&R	80009	321-5018-00
A13R606	321-5018-00			RES,FXD:METAL FILM;1.0K OHM,1%,0.125W,TC=100 PPM;1206,T&R	80009	321-5018-00
A13R608	321-5018-00			RES,FXD:METAL FILM;1.0K OHM,1%,0.125W,TC=100 PPM;1206,T&R	80009	321-5018-00
A13R640	321-5009-00			RES,FXD:METAL FILM;182 OHM,1%,0.125W,TC=100 PPM;1206,T&R	80009	321-5009-00
A13R641	321-5026-00			RES,FXD:METAL FILM;4.75K OHM,1%,0.125W,TC=100 PPM;1206,T&R	80009	321-5026-00
A13R644	321-5023-00			RES,FXD:METAL FILM;2.74K OHM,1%,0.125W,TC=100 PPM;1206,T&R	80009	321-5023-00
A13R646	321-5016-00			RES,FXD:METAL FILM;681 OHM,1%,0.125W,TC=100 PPM;1206,T&R	01121	BCK6810FT
A13R647	321-5031-00			RES,FXD:METAL FILM;12.1K OHM,1%,0.125W,TC=100 PPM;1206,T&R	80009	321-5031-00
A13R648	321-5043-00			RES,FXD:METAL FILM;47.5 OHM,1%,0.125W,TC=100 PPM;1206,T&R	80009	321-5043-00
A13R650	321-5018-00			RES,FXD:METAL FILM;1.0K OHM,1%,0.125W,TC=100 PPM;1206,T&R	80009	321-5018-00
A13R651	321-5047-00			RES,FXD:METAL FILM;100K OHM,1%,0.125W,TC=100 PPM;1206,T&R	80009	321-5047-00
A13R652	321-5018-00			RES,FXD:METAL FILM;1.0K OHM,1%,0.125W,TC=100 PPM;1206,T&R	80009	321-5018-00
A13R653	321-5047-00			RES,FXD:METAL FILM;100K OHM,1%,0.125W,TC=100 PPM;1206,T&R	80009	321-5047-00
A13R662	321-5000-00			RES,FXD:METAL FILM;10 OHM,1%,0.125W,TC=100 PPM;1206,T&R	57668	MCR18EZHFW10E
A13R671	321-5030-00			RES,FXD:METAL FILM;10.0K OHM,1%,0.125W,TC=100 PPM;1206,T&R	80009	321-5030-00
A13R672	321-5030-00			RES,FXD:METAL FILM;10.0K OHM,1%,0.125W,TC=100 PPM;1206,T&R	80009	321-5030-00
A13R685	321-5017-00			RES,FXD:METAL FILM;825 OHM,1%,0.125W,TC=100 PPM;1206,T&R	80009	321-5017-00
A13R686	321-5019-00			RES,FXD:METAL FILM;1.21K OHM,1%,0.125W,TC=100 PPM;1206,T&R	80009	321-5019-00
A13T256	120-1721-00			TRANSFORMER,RF:AUTO,6:6:6 RATIO	0JR03	120-1721-00
A13T700	120-1720-00			TRANSFORMER,RF:BALUN,1:11 RATIO,TAPPED AT 4 TURNS,W/HOLDER,CORE 276-0712-00	0JR03	120-1720-00
A13T750	120-1720-00			TRANSFORMER,RF:BALUN,1:11 RATIO,TAPPED AT 4 TURNS,W/HOLDER,CORE 276-0712-00	0JR03	120-1720-00
A13T760	120-1720-00			TRANSFORMER,RF:BALUN,1:11 RATIO,TAPPED AT 4 TURNS,W/HOLDER,CORE 276-0712-00	0JR03	120-1720-00
A13T770	120-1720-00			TRANSFORMER,RF:BALUN,1:11 RATIO,TAPPED AT 4 TURNS,W/HOLDER,CORE 276-0712-00	0JR03	120-1720-00
A13T780	120-1720-00			TRANSFORMER,RF:BALUN,1:11 RATIO,TAPPED AT 4 TURNS,W/HOLDER,CORE 276-0712-00	0JR03	120-1720-00
A13T790	120-1720-00			TRANSFORMER,RF:BALUN,1:11 RATIO,TAPPED AT 4 TURNS,W/HOLDER,CORE 276-0712-00	0JR03	120-1720-00
A13U190	156-5081-01			IC,DIGITAL:HCTMOS,GATE;HEX INVERTER;74HCT04 ,SO14.150,16MM T&R	80009	156-5081-01

Component No.	Tektronix Part No.	Serial/Assembly No. Effective	Dscont	Name & Description	Mfr. Code	Mfr. Part No.
A13U300	156-5088-00			IC,DIGITAL:HCTCMOS,DEMUX/DECODER;3-TO-8 DEC ODER;74HCT138,SO16.150,TUBE	80009	156-5088-00
A13U400	156-5021-01			IC,DIGITAL:CMOS,REGISTER;8-STAGE SHIFT/STOR AGE, 3-STATE;4094,SO16.150,16MM T&R	80009	156-5021-01
A13U560	156-5081-01			IC,DIGITAL:HCTMOS,GATE;HEX INVERTER;74HCT04 ,SO14.150,16MM T&R	80009	156-5081-01
A13U570	156-5021-01			IC,DIGITAL:CMOS,REGISTER;8-STAGE SHIFT/STOR AGE, 3-STATE;4094,SO16.150,16MM T&R	80009	156-5021-01
A13U650	156-5088-00			IC,DIGITAL:HCTCMOS,DEMUX/DECODER;3-TO-8 DEC ODER;74HCT138,SO16.150,TUBE	80009	156-5088-00
A13U660	156-5021-01			IC,DIGITAL:CMOS,REGISTER;8-STAGE SHIFT/STOR AGE, 3-STATE;4094,SO16.150,16MM T&R	80009	156-5021-01
A13U670	156-5043-01			IC,CONVERTER:BIPOLAR,D/A;8 BIT,CURRENT OUT, MULTIPLYING;DAC08ED,SO16.150,16MM T&R	80009	156-5043-01
A13U680	156-5018-00			IC,LINEAR:BIPOLAR,OP-AMP;DUAL,SINGLE SUPPLY ;LM358D,SO8.150,TUBE	80009	156-5018-00
A13U681	156-5298-00			IC,LINEAR:BIPOLAR,VOLTAGE REGULATOR;POSITIV E,5V,100MA,5%;MC78L05ACD,SO8.150,TUBE	80009	156-5298-00
A13Y711	158-0323-00			XTAL UNIT,QTZ:4 POLE,10MHZ	34630	001-56-440
A13Y720	158-0323-00			XTAL UNIT,QTZ:4 POLE,10MHZ	34630	001-56-440
A13Y811	158-0324-00			XTAL UNIT,QTZ:SET OF 3 : 3 POLE MONOLITHIC CRYSTAL FILTERS, CENTER	34630	001-56-450
A13Y820	158-0324-00			XTAL UNIT,QTZ:SET OF 3 : 3 POLE MONOLITHIC CRYSTAL FILTERS, CENTER	34630	001-56-450
A13Y821	158-0324-00			XTAL UNIT,QTZ:SET OF 3 : 3 POLE MONOLITHIC CRYSTAL FILTERS, CENTER	34630	001-56-450
A14	672-1308-05	B031331				
A14A1	-- ---- --			CIRCUIT BD ASSY:RF MOM (PART OF A14)	80009	671-1196-02
A14A1C120	283-5002-00			CAP,FXD,CER DI:1000PF,10%,50V	80009	283-5002-00
A14A1C121	283-5008-00			CAP,FXD,CER DI:12PF,5%,50V	54583	C3216C0G1H120J
A14A1C165	283-5004-00			CAP,FXD,CER DI:0.1UF,10%,25V	80009	283-5004-00
A14A1C171	283-5004-00			CAP,FXD,CER DI:0.1UF,10%,25V	80009	283-5004-00
A14A1C173	283-5004-00			CAP,FXD,CER DI:0.1UF,10%,25V	80009	283-5004-00
A14A1C180	283-5004-00			CAP,FXD,CER DI:0.1UF,10%,25V	80009	283-5004-00
A14A1C201	290-0517-00			CAP,FXD,ELCTLT:6.8UF,20%,35V	05397	T368B685M035AZ
A14A1C202	283-5004-00			CAP,FXD,CER DI:0.1UF,10%,25V	80009	283-5004-00
A14A1C203	290-0782-00			CAP,FXD,ELCTLT:4.7UF,+75-20%,35VDC	55680	UVX1V4R7MAA
A14A1C210	283-5004-00			CAP,FXD,CER DI:0.1UF,10%,25V	80009	283-5004-00
A14A1C220	283-5011-00			CAP,FXD,CER DI:33PF,5%,50V	95275	VJ1206A330JXA
A14A1C221	283-5000-00			CAP,FXD,CER DI:10PF,5%,50V	80009	283-5000-00
A14A1C261	283-5004-00			CAP,FXD,CER DI:0.1UF,10%,25V	80009	283-5004-00
A14A1C264	283-5004-00			CAP,FXD,CER DI:0.1UF,10%,25V	80009	283-5004-00
A14A1C271	283-5004-00			CAP,FXD,CER DI:0.1UF,10%,25V	80009	283-5004-00
A14A1C272	283-5004-00			CAP,FXD,CER DI:0.1UF,10%,25V	80009	283-5004-00
A14A1C274	283-5004-00			CAP,FXD,CER DI:0.1UF,10%,25V	80009	283-5004-00
A14A1C280	283-5006-00			CAP,FXD,CER DI:5PF,+/- 0.25PF,50V	54583	C3216C0G1H050C
A14A1C310	283-5004-00			CAP,FXD,CER DI:0.1UF,10%,25V	80009	283-5004-00
A14A1C311	283-5004-00			CAP,FXD,CER DI:0.1UF,10%,25V	80009	283-5004-00
A14A1C320	283-5000-00			CAP,FXD,CER DI:10PF,5%,50V	80009	283-5000-00
A14A1C321	283-5000-00			CAP,FXD,CER DI:10PF,5%,50V	80009	283-5000-00
A14A1C330	283-5002-00			CAP,FXD,CER DI:1000PF,10%,50V	80009	283-5002-00
A14A1C340	290-5002-00			CAP,FXD,ELCTLT:10UF,20V	TK1424	20MC100M-TER
A14A1C350	283-5004-00			CAP,FXD,CER DI:0.1UF,10%,25V	80009	283-5004-00
A14A1C361	283-5004-00			CAP,FXD,CER DI:0.1UF,10%,25V	80009	283-5004-00
A14A1C362	283-5004-00			CAP,FXD,CER DI:0.1UF,10%,25V	80009	283-5004-00
A14A1C363	283-5004-00			CAP,FXD,CER DI:0.1UF,10%,25V	80009	283-5004-00
A14A1C366	283-5004-00			CAP,FXD,CER DI:0.1UF,10%,25V	80009	283-5004-00
A14A1C370	283-5004-00			CAP,FXD,CER DI:0.1UF,10%,25V	80009	283-5004-00

Component No.	Tektronix Part No.	Serial/Assembly No. Effective	Dscont	Name & Description	Mfr. Code	Mfr. Part No.
A14A1C372	283-5004-00			CAP,FXD,CER DI:0.1UF,10%,25V	80009	283-5004-00
A14A1C374	283-5004-00			CAP,FXD,CER DI:0.1UF,10%,25V	80009	283-5004-00
A14A1C420	283-5000-00			CAP,FXD,CER DI:10PF,5%,50V	80009	283-5000-00
A14A1C430	283-5002-00			CAP,FXD,CER DI:1000PF,10%,50V	80009	283-5002-00
A14A1C444	283-5004-00			CAP,FXD,CER DI:0.1UF,10%,25V	80009	283-5004-00
A14A1C445	283-5004-00			CAP,FXD,CER DI:0.1UF,10%,25V	80009	283-5004-00
A14A1C465	283-5004-00			CAP,FXD,CER DI:0.1UF,10%,25V	80009	283-5004-00
A14A1C466	283-5004-00			CAP,FXD,CER DI:0.1UF,10%,25V	80009	283-5004-00
A14A1C472	283-5004-00			CAP,FXD,CER DI:0.1UF,10%,25V	80009	283-5004-00
A14A1C476	283-5004-00			CAP,FXD,CER DI:0.1UF,10%,25V	80009	283-5004-00
A14A1C477	283-5004-00			CAP,FXD,CER DI:0.1UF,10%,25V	80009	283-5004-00
A14A1C500	283-5004-00			CAP,FXD,CER DI:0.1UF,10%,25V	80009	283-5004-00
A14A1C501	283-5002-00			CAP,FXD,CER DI:1000PF,10%,50V	80009	283-5002-00
A14A1C502	283-5004-00			CAP,FXD,CER DI:0.1UF,10%,25V	80009	283-5004-00
A14A1C503	283-5004-00			CAP,FXD,CER DI:0.1UF,10%,25V	80009	283-5004-00
A14A1C504	283-5004-00			CAP,FXD,CER DI:0.1UF,10%,25V	80009	283-5004-00
A14A1C510	283-5004-00			CAP,FXD,CER DI:0.1UF,10%,25V	80009	283-5004-00
A14A1C523	283-5011-00			CAP,FXD,CER DI:33PF,5%,50V	95275	VJ1206A330JXA
A14A1C524	283-5011-00			CAP,FXD,CER DI:33PF,5%,50V	95275	VJ1206A330JXA
A14A1C533	283-5001-00			CAP,FXD,CER DI:100PF,5%,50V	80009	283-5001-00
A14A1C534	283-5004-00			CAP,FXD,CER DI:0.1UF,10%,25V	80009	283-5004-00
A14A1C542	283-5004-00			CAP,FXD,CER DI:0.1UF,10%,25V	80009	283-5004-00
A14A1C550	283-5004-00			CAP,FXD,CER DI:0.1UF,10%,25V	80009	283-5004-00
A14A1C551	283-5014-00			CAP,FXD,CER DI:330PF,5%,50V	80009	283-5014-00
A14A1C561	283-5004-00			CAP,FXD,CER DI:0.1UF,10%,25V	80009	283-5004-00
A14A1C562	283-5001-00			CAP,FXD,CER DI:100PF,5%,50V	80009	283-5001-00
A14A1C564	283-5004-00			CAP,FXD,CER DI:0.1UF,10%,25V	80009	283-5004-00
A14A1C567	283-5001-00			CAP,FXD,CER DI:100PF,5%,50V	80009	283-5001-00
A14A1C572	283-5004-00			CAP,FXD,CER DI:0.1UF,10%,25V	80009	283-5004-00
A14A1C574	283-5004-00			CAP,FXD,CER DI:0.1UF,10%,25V	80009	283-5004-00
A14A1C600	283-5002-00			CAP,FXD,CER DI:1000PF,10%,50V	80009	283-5002-00
A14A1C612	283-5004-00			CAP,FXD,CER DI:0.1UF,10%,25V	80009	283-5004-00
A14A1C619	290-0517-00			CAP,FXD,ELCTLT:6.8UF,20%,35V	05397	T368B685M035AZ
A14A1C620	290-0944-00			CAP,FXD,ELCTLT:220UF,+50-20%,10V	55680	UVX1C221MPA
A14A1C621	283-5004-00			CAP,FXD,CER DI:0.1UF,10%,25V	80009	283-5004-00
A14A1C630	283-5011-00			CAP,FXD,CER DI:33PF,5%,50V	95275	VJ1206A330JXA
A14A1C631	283-5011-00			CAP,FXD,CER DI:33PF,5%,50V	95275	VJ1206A330JXA
A14A1C632	283-5004-00			CAP,FXD,CER DI:0.1UF,10%,25V	80009	283-5004-00
A14A1C640	283-5004-00			CAP,FXD,CER DI:0.1UF,10%,25V	80009	283-5004-00
A14A1C643	283-5004-00			CAP,FXD,CER DI:0.1UF,10%,25V	80009	283-5004-00
A14A1C650	283-5004-00			CAP,FXD,CER DI:0.1UF,10%,25V	80009	283-5004-00
A14A1C651	283-5005-00			CAP,FXD,CER DI:4PF,+/- 0.25PF,50V	54583	C3216C0G1H040C
A14A1C652	283-5014-00			CAP,FXD,CER DI:330PF,5%,50V	80009	283-5014-00
A14A1C653	283-5001-00			CAP,FXD,CER DI:100PF,5%,50V	80009	283-5001-00
A14A1C654	283-5014-00			CAP,FXD,CER DI:330PF,5%,50V	80009	283-5014-00
A14A1C662	283-5004-00			CAP,FXD,CER DI:0.1UF,10%,25V	80009	283-5004-00
A14A1C671	283-5004-00			CAP,FXD,CER DI:0.1UF,10%,25V	80009	283-5004-00
A14A1C675	283-5004-00			CAP,FXD,CER DI:0.1UF,10%,25V	80009	283-5004-00
A14A1C701	283-5002-00			CAP,FXD,CER DI:1000PF,10%,50V	80009	283-5002-00
A14A1C702	283-5002-00			CAP,FXD,CER DI:1000PF,10%,50V	80009	283-5002-00
A14A1C711	283-5004-00			CAP,FXD,CER DI:0.1UF,10%,25V	80009	283-5004-00
A14A1C712	290-0517-00			CAP,FXD,ELCTLT:6.8UF,20%,35V	05397	T368B685M035AZ
A14A1C720	290-0944-00			CAP,FXD,ELCTLT:220UF,+50-20%,10V	55680	UVX1C221MPA
A14A1C721	283-5003-00			CAP,FXD,CER DI:0.01UF,10%,50V	80009	283-5003-00
A14A1C736	283-5004-00			CAP,FXD,CER DI:0.1UF,10%,25V	80009	283-5004-00
A14A1C763	283-5004-00			CAP,FXD,CER DI:0.1UF,10%,25V	80009	283-5004-00
A14A1C780	283-5006-00			CAP,FXD,CER DI:5PF,+/- 0.25PF,50V	54583	C3216C0G1H050C
A14A1CR223	152-0843-00			DIODE,SIG:SCHTKY,;SER-PAIR,20V,410MV,1.3PF; HSMS-2812,SOT-23,T&R	80009	152-0843-00

Component No.	Tektronix Part No.	Serial/Assembly No. Effective	Dscont	Name & Description	Mfr. Code	Mfr. Part No.
A14A1CR367	152-5043-00			SEMICOND DVC,DI:PIN,SI,100V,2.5 OHM,0.35PF, 0.35PF,SOT-23,HSMP-3802	80009	152-5043-00
A14A1CR369	152-5043-00			SEMICOND DVC,DI:PIN,SI,100V,2.5 OHM,0.35PF, 0.35PF,SOT-23,HSMP-3802	80009	152-5043-00
A14A1FL180	119-2576-01			FILTER:110MHZ	80009	119-2576-01
A14A1J100	131-1803-02			CONN,RCPT,ELEC:	80009	131-1803-02
A14A1J160	131-1857-00			CONN,HDR:PCB,;MALE,STR,1 X 36,0.1 CTR,0.230 MLG X 0.100 TAIL,GOLD;,,	58050	082-3644-SS10
A14A1J400	131-3774-00			CONN,HDR:PCB,;MALE,STR,2 X 36,0.1 CTR,0.230 MLG X 0.095 TAIL,30 GOLD;,,	22526	65610-172
A14A1J410	131-0938-00			CONN,RF JACK::SMB/PNL,;MALE,STR,50 OHM,0.25 HEX,2.0 L 0.025 DIA TAIL,10-32 THD,REAR MT	24931	32JR125-1
A14A1J520	131-1857-00			CONN,HDR:PCB,;MALE,STR,1 X 36,0.1 CTR,0.230 MLG X 0.100 TAIL,GOLD;,,	58050	082-3644-SS10
A14A1J565	131-0938-00			CONN,RF JACK::SMB/PNL,;MALE,STR,50 OHM,0.25 HEX,2.0 L 0.025 DIA TAIL,10-32 THD,REAR MT	24931	32JR125-1
A14A1J670	131-0938-00			CONN,RF JACK::SMB/PNL,;MALE,STR,50 OHM,0.25 HEX,2.0 L 0.025 DIA TAIL,10-32 THD,REAR MT	24931	32JR125-1
A14A1J700	131-3774-00			CONN,HDR:PCB,;MALE,STR,2 X 36,0.1 CTR,0.230 MLG X 0.095 TAIL,30 GOLD;,,	22526	65610-172
A14A1J770	131-1857-00			CONN,HDR:PCB,;MALE,STR,1 X 36,0.1 CTR,0.230 MLG X 0.100 TAIL,GOLD;,,	58050	082-3644-SS10
A14A1L122	108-5013-00			COIL,RF:	80009	108-5013-00
A14A1L201	108-1262-00			COIL,RF:FXD,100UH,10%,Q=30,SRF 8.2MHZ,DCR 0 .23 OHM,I MAX 0.75ARADIAL LEAD	80009	108-1262-00
A14A1L222	108-5013-00			COIL,RF:	80009	108-5013-00
A14A1L364	108-5005-00			COIL,RF:	80009	108-5005-00
A14A1L375	108-5005-00			COIL,RF:	80009	108-5005-00
A14A1L402	108-5093-00			COIL,RF:	02113	1812LS-222 XKBA
A14A1L403	108-5093-00			COIL,RF:	02113	1812LS-222 XKBA
A14A1L511	108-5000-00			COIL,RF:	80009	108-5000-00
A14A1L525	108-5001-00			COIL,RF:FXD,70NH,+/-5%,Q=35,SRF 900MHZ, DCR 0.55 OHM, I MAX	80009	108-5001-00
A14A1L611	108-1262-00			COIL,RF:FXD,100UH,10%,Q=30,SRF 8.2MHZ,DCR 0 .23 OHM,I MAX 0.75ARADIAL LEAD	80009	108-1262-00
A14A1L622	108-5001-00			COIL,RF:FXD,70NH,+/-5%,Q=35,SRF 900MHZ, DCR 0.55 OHM, I MAX	80009	108-5001-00
A14A1L652	108-5000-00			COIL,RF:	80009	108-5000-00
A14A1L655	108-5000-00			COIL,RF:	80009	108-5000-00
A14A1L710	108-1262-00			COIL,RF:FXD,100UH,10%,Q=30,SRF 8.2MHZ,DCR 0 .23 OHM,I MAX 0.75ARADIAL LEAD	80009	108-1262-00
A14A1L750	108-5001-00			COIL,RF:FXD,70NH,+/-5%,Q=35,SRF 900MHZ, DCR 0.55 OHM, I MAX	80009	108-5001-00
A14A1P160	131-3199-00			BUS,CONDUCTOR:SHUNT,;FEMALE,1 X 2,0.1 CTR,0 .200 H,LOW PROFILE,JUMPER;,,	22526	76264-101
A14A1P770	131-3199-00			BUS,CONDUCTOR:SHUNT,;FEMALE,1 X 2,0.1 CTR,0 .200 H,LOW PROFILE,JUMPER;,,	22526	76264-101
A14A1Q112	151-5010-01	B031331				
A14A1Q164	151-5010-00			TRANSISTOR,SIG:BIPOLAR,NPN;12V,200MA,6.5GHZ ,AMPLIFIER;NE85634/2SC3357,SOT-89,12MM T/R	80009	151-5010-00
A14A1Q266	151-5010-00			TRANSISTOR,SIG:BIPOLAR,NPN;12V,200MA,6.5GHZ ,AMPLIFIER;NE85634/2SC3357,SOT-89,12MM T/R	80009	151-5010-00
A14A1Q322	151-0608-00			TRANSISTOR,SIG:BIPOLAR,NPN;12V,65MA,8.5GHZ, AMPLIFIER;NE64535/2SC2585,4 PIN CERAMIC X P KG	80009	151-0608-00
A14A1Q446	151-5000-00			TRANSISTOR,SIG:BIPOLAR,PNP;40V,200MA,250MHZ ,AMPLIFIER;MMBT3906L,TO-236/SOT-23,8MM T&R	04713	MMBT3906LT1
A14A1Q461	151-5010-00			TRANSISTOR,SIG:BIPOLAR,NPN;12V,200MA,6.5GHZ ,AMPLIFIER;NE85634/2SC3357,SOT-89,12MM T/R	80009	151-5010-00

Component No.	Tektronix Part No.	Serial/Assembly No. Effective	Dscont	Name & Description	Mfr. Code	Mfr. Part No.
A14A1Q462	151-5010-00			TRANSISTOR,SIG:BIPOLAR,NPN;12V,200MA,6.5GHZ ,AMPLIFIER;NE85634/2SC3357,SOT-89,12MM T/R	80009	151-5010-00
A14A1Q530	151-5001-00			TRANSISTOR,SIG:BIPOLAR,NPN;40V,200MA,300MHZ ,AMPLIFIER;MMBT3904L,TO-236/SOT-23,8MM T&R	80009	151-5001-00
A14A1Q540	151-5001-00			TRANSISTOR,SIG:BIPOLAR,NPN;40V,200MA,300MHZ ,AMPLIFIER;MMBT3904L,TO-236/SOT-23,8MM T&R	80009	151-5001-00
A14A1Q541	151-5001-00			TRANSISTOR,SIG:BIPOLAR,NPN;40V,200MA,300MHZ ,AMPLIFIER;MMBT3904L,TO-236/SOT-23,8MM T&R	80009	151-5001-00
A14A1Q661	151-5009-00			TRANSISTOR,SIG:BIPOLAR,NPN;25V,300MA,1.2GHZ ,AMPLIFIER;BFQ17,SOT-89,12MM T/R	80009	151-5009-00
A14A1Q740	151-5010-00			TRANSISTOR,SIG:BIPOLAR,NPN;12V,200MA,6.5GHZ ,AMPLIFIER;NE85634/2SC3357,SOT-89,12MM T/R	80009	151-5010-00
A14A1Q741	151-5010-00			TRANSISTOR,SIG:BIPOLAR,NPN;12V,200MA,6.5GHZ ,AMPLIFIER;NE85634/2SC3357,SOT-89,12MM T/R	80009	151-5010-00
A14A1R161	321-5004-00			RES,FXD:METAL FILM;22.1 OHM,1%,0.125W,TC=10 0 PPM;1206,T&R	80009	321-5004-00
A14A1R162	321-5014-00			RES,FXD:METAL FILM;475 OHM,1%,0.125W,TC=100 PPM;1206,T&R	80009	321-5014-00
A14A1R170	321-5018-00			RES,FXD:METAL FILM;1.0K OHM,1%,0.125W,TC=10 0 PPM;1206,T&R	80009	321-5018-00
A14A1R172	321-5000-00			RES,FXD:METAL FILM;10 OHM,1%,0.125W,TC=100 PPM;1206,T&R	57668	MCR18EZHFW10E
A14A1R200	311-1228-00			RES,VAR,NONWW:TRMR,10K OHM,0.5W	80009	311-1228-00
A14A1R260	321-5001-00			RES,FXD:METAL FILM;12.1 OHM,1%,0.125W,TC=10 0 PPM;1206,T&R	57668	MCR18EZHFW 12E1
A14A1R262	321-5014-00			RES,FXD:METAL FILM;475 OHM,1%,0.125W,TC=100 PPM;1206,T&R	80009	321-5014-00
A14A1R263	321-5009-00			RES,FXD:METAL FILM;182 OHM,1%,0.125W,TC=100 PPM;1206,T&R	80009	321-5009-00
A14A1R265	321-5004-00			RES,FXD:METAL FILM;22.1 OHM,1%,0.125W,TC=10 0 PPM;1206,T&R	80009	321-5004-00
A14A1R270	321-5000-00			RES,FXD:METAL FILM;10 OHM,1%,0.125W,TC=100 PPM;1206,T&R	57668	MCR18EZHFW10E
A14A1R273	321-5014-00			RES,FXD:METAL FILM;475 OHM,1%,0.125W,TC=100 PPM;1206,T&R	80009	321-5014-00
A14A1R275	321-5018-00			RES,FXD:METAL FILM;1.0K OHM,1%,0.125W,TC=10 0 PPM;1206,T&R	80009	321-5018-00
A14A1R341	321-5006-00			RES,FXD:METAL FILM;100 OHM,1%,0.125W,TC=100 PPM;1206,T&R	80009	321-5006-00
A14A1R360	321-5009-00			RES,FXD:METAL FILM;182 OHM,1%,0.125W,TC=100 PPM;1206,T&R	80009	321-5009-00
A14A1R365	321-5043-00			RES,FXD:METAL FILM;47.5 OHM,1%,0.125W,TC=10 0 PPM;1206,T&R	80009	321-5043-00
A14A1R368	321-5043-00			RES,FXD:METAL FILM;47.5 OHM,1%,0.125W,TC=10 0 PPM;1206,T&R	80009	321-5043-00
A14A1R371	321-5018-00			RES,FXD:METAL FILM;1.0K OHM,1%,0.125W,TC=10 0 PPM;1206,T&R	80009	321-5018-00
A14A1R373	321-5043-00			RES,FXD:METAL FILM;47.5 OHM,1%,0.125W,TC=10 0 PPM;1206,T&R	80009	321-5043-00
A14A1R400	321-5006-00			RES,FXD:METAL FILM;100 OHM,1%,0.125W;TC=100 PPM;1206,T&R	80009	321-5006-00
A14A1R401	321-5006-00			RES,FXD:METAL FILM;100 OHM,1%,0.125W,TC=100 PPM;1206,T&R	80009	321-5006-00
A14A1R421	321-5018-00			RES,FXD:METAL FILM;1.0K OHM,1%,0.125W,TC=10 0 PPM;1206,T&R	80009	321-5018-00
A14A1R431	321-5013-00			RES,FXD:METAL FILM;392 OHM,1%,0.125W,TC=100 PPM;1206,T&R	80009	321-5013-00
A14A1R440	321-5043-00			RES,FXD:METAL FILM;47.5 OHM,1%,0.125W,TC=10 0 PPM;1206,T&R	80009	321-5043-00

Component No.	Tektronix Part No.	Serial/Assembly No. Effective	Dscont	Name & Description	Mfr. Code	Mfr. Part No.
A14A1R441	321-5014-00			RES,FXD:METAL FILM;475 OHM,1%,0.125W,TC=100 PPM;1206,T&R	80009	321-5014-00
A14A1R442	321-5022-00			RES,FXD:METAL FILM;2.21K OHM,1%,0.125W,TC=100 PPM;1206,T&R	80009	321-5022-00
A14A1R443	321-5026-00			RES,FXD:METAL FILM;4.75K OHM,1%,0.125W,TC=100 PPM;1206,T&R	80009	321-5026-00
A14A1R451	321-5004-00			RES,FXD:METAL FILM;22.1 OHM,1%,0.125W,TC=100 PPM;1206,T&R	80009	321-5004-00
A14A1R452	321-5004-00			RES,FXD:METAL FILM;22.1 OHM,1%,0.125W,TC=100 PPM;1206,T&R	80009	321-5004-00
A14A1R463	321-5014-00			RES,FXD:METAL FILM;475 OHM,1%,0.125W,TC=100 PPM;1206,T&R	80009	321-5014-00
A14A1R464	321-5009-00			RES,FXD:METAL FILM;182 OHM,1%,0.125W,TC=100 PPM;1206,T&R	80009	321-5009-00
A14A1R467	321-5001-00			RES,FXD:METAL FILM;12.1 OHM,1%,0.125W,TC=100 PPM;1206,T&R	57668	MCR18EZHFW 12E1
A14A1R470	321-5018-00			RES,FXD:METAL FILM;1.0K OHM,1%,0.125W,TC=100 PPM;1206,T&R	80009	321-5018-00
A14A1R473	321-5000-00			RES,FXD:METAL FILM;10 OHM,1%,0.125W,TC=100 PPM;1206,T&R	57668	MCR18EZHFW10E
A14A1R474	321-5014-00			RES,FXD:METAL FILM;475 OHM,1%,0.125W,TC=100 PPM;1206,T&R	80009	321-5014-00
A14A1R521	321-5015-00			RES,FXD:METAL FILM;562 OHM,1%,0.125W,TC=100 PPM;1206,T&R	80009	321-5015-00
A14A1R522	321-5015-00			RES,FXD:METAL FILM;562 OHM,1%,0.125W,TC=100 PPM;1206,T&R	80009	321-5015-00
A14A1R531	321-5016-00			RES,FXD:METAL FILM;681 OHM,1%,0.125W,TC=100 PPM;1206,T&R	01121	BCK6810FT
A14A1R532	321-5030-00			RES,FXD:METAL FILM;10.0K OHM,1%,0.125W,TC=100 PPM;1206,T&R	80009	321-5030-00
A14A1R543	321-5030-00			RES,FXD:METAL FILM;10.0K OHM,1%,0.125W,TC=100 PPM;1206,T&R	80009	321-5030-00
A14A1R544	321-5016-00			RES,FXD:METAL FILM;681 OHM,1%,0.125W,TC=100 PPM;1206,T&R	01121	BCK6810FT
A14A1R545	321-5030-00			RES,FXD:METAL FILM;10.0K OHM,1%,0.125W,TC=100 PPM;1206,T&R	80009	321-5030-00
A14A1R552	321-5044-00			RES,FXD:METAL FILM;56.2 OHM,1%,0.125W,TC=100 PPM;1206,T&R	01121	BCD56R2FT
A14A1R563	321-5015-00			RES,FXD:METAL FILM;562 OHM,1%,0.125W,TC=100 PPM;1206,T&R	80009	321-5015-00
A14A1R570	321-5014-00			RES,FXD:METAL FILM;475 OHM,1%,0.125W,TC=100 PPM;1206,T&R	80009	321-5014-00
A14A1R573	321-5000-00			RES,FXD:METAL FILM;10 OHM,1%,0.125W,TC=100 PPM;1206,T&R	57668	MCR18EZHFW10E
A14A1R601	321-5006-00			RES,FXD:METAL FILM;100 OHM,1%,0.125W,TC=100 PPM;1206,T&R	80009	321-5006-00
A14A1R602	321-5006-00			RES,FXD:METAL FILM;100 OHM,1%,0.125W,TC=100 PPM;1206,T&R	80009	321-5006-00
A14A1R633	321-5010-00			RES,FXD:METAL FILM;221 OHM,1%,0.125W,TC=100 PPM;1206,T&R	80009	321-5010-00
A14A1R634	321-5030-00			RES,FXD:METAL FILM;10.0K OHM,1%,0.125W,TC=100 PPM;1206,T&R	80009	321-5030-00
A14A1R635	321-5006-00			RES,FXD:METAL FILM;100 OHM,1%,0.125W,TC=100 PPM;1206,T&R	80009	321-5006-00
A14A1R641	321-5030-00			RES,FXD:METAL FILM;10.0K OHM,1%,0.125W,TC=100 PPM;1206,T&R	80009	321-5030-00
A14A1R642	321-5000-00			RES,FXD:METAL FILM;10 OHM,1%,0.125W,TC=100 PPM;1206,T&R	57668	MCR18EZHFW10E

Component No.	Tektronix Part No.	Serial/Assembly No. Effective	Dscont	Name & Description	Mfr. Code	Mfr. Part No.
A14A1R663	321-5014-00			RES,FXD:METAL FILM;475 OHM,1%,0.125W,TC=100 PPM;1206,T&R	80009	321-5014-00
A14A1R664	321-5004-00			RES,FXD:METAL FILM;22.1 OHM,1%,0.125W,TC=10 0 PPM;1206,T&R	80009	321-5004-00
A14A1R670	321-5000-00			RES,FXD:METAL FILM;10 OHM,1%,0.125W,TC=100 PPM;1206,T&R	57668	MCR18EZHFW10E
A14A1R672	321-5001-00			RES,FXD:METAL FILM;12.1 OHM,1%,0.125W,TC=10 0 PPM;1206,T&R	57668	MCR18EZHFW 12E1
A14A1R673	321-5014-00			RES,FXD:METAL FILM;475 OHM,1%,0.125W,TC=100 PPM;1206,T&R	80009	321-5014-00
A14A1R674	321-5018-00			RES,FXD:METAL FILM;1.0K OHM,1%,0.125W,TC=10 0 PPM;1206,T&R	80009	321-5018-00
A14A1R730	321-5044-00			RES,FXD:METAL FILM;56.2 OHM,1%,0.125W,TC=10 0 PPM;1206,T&R	01121	BCD56R2FT
A14A1R731	321-5015-00			RES,FXD:METAL FILM;562 OHM,1%,0.125W,TC=100 PPM;1206,T&R	80009	321-5015-00
A14A1R732	321-5015-00			RES,FXD:METAL FILM;562 OHM,1%,0.125W,TC=100 PPM;1206,T&R	80009	321-5015-00
A14A1R733	321-5000-00			RES,FXD:METAL FILM;10 OHM,1%,0.125W,TC=100 PPM;1206,T&R	57668	MCR18EZHFW10E
A14A1R734	321-5006-00			RES,FXD:METAL FILM;100 OHM,1%,0.125W,TC=100 PPM;1206,T&R	80009	321-5006-00
A14A1R735	321-5044-00			RES,FXD:METAL FILM;56.2 OHM,1%,0.125W,TC=10 0 PPM;1206,T&R	01121	BCD56R2FT
A14A1R764	321-5030-00			RES,FXD:METAL FILM;10.0K OHM,1%,0.125W,TC=1 00 PPM;1206,T&R	80009	321-5030-00
A14A1R773	321-5026-00			RES,FXD:METAL FILM;4.75K OHM,1%,0.125W,TC=1 00 PPM;1206,T&R	80009	321-5026-00
A14A1R774	321-5024-00			RES,FXD:METAL FILM;3.32K OHM,1%,0.125W,TC=1 00 PPM;1206,T&R	80009	321-5024-00
A14A1T163	120-1716-00			TRANSFORMER,RF:BALUN,1:8 RATIO,TAPPED AT 3 TURNS,W/HOLDER,CORE 276-0712-00	0JR03	120-1716-00
A14A1T267	120-1716-00			TRANSFORMER,RF:BALUN,1:8 RATIO,TAPPED AT 3 TURNS,W/HOLDER,CORE 276-0712-00	0JR03	120-1716-00
A14A1T460	120-1716-00			TRANSFORMER,RF:BALUN,1:8 RATIO,TAPPED AT 3 TURNS,W/HOLDER,CORE 276-0712-00	0JR03	120-1716-00
A14A1T468	120-1716-00			TRANSFORMER,RF:BALUN,1:8 RATIO,TAPPED AT 3 TURNS,W/HOLDER,CORE 276-0712-00	0JR03	120-1716-00
A14A1T560	120-1720-00			TRANSFORMER,RF:BALUN,1:11 RATIO,TAPPED AT 4 TURNS,W/HOLDER,CORE 276-0712-00	0JR03	120-1720-00
A14A1T636	120-0902-00			XFMR,TOROID:	80009	120-0902-00
A14A1T660	120-0902-00			XFMR,TOROID:	80009	120-0902-00
A14A1T742	120-1630-00			TRANSFORMER,RF:TOROID	0JR03	120-1630-00
A14A1T751	120-1630-00			TRANSFORMER,RF:TOROID	0JR03	120-1630-00
A14A1T760	120-1630-00			TRANSFORMER,RF:TOROID	0JR03	120-1630-00
A14A1U450	156-5298-00			IC,LINEAR:BIPOLAR,VOLTAGE REGULATOR;POSITIV E,5V,100MA,5%;MC78L05ACD,SO8.150,TUBE	80009	156-5298-00
A14A1U546	156-5018-00			IC,LINEAR:BIPOLAR,OP-AMP;DUAL,SINGLE SUPPLY ;LM358D,SO8.150,TUBE	80009	156-5018-00
A14A1U610	156-5269-00			IC,DIGITAL:ECL,RECEIVER;TRIPLE LINE;10H116, PLCC20,TUBE	80009	156-5269-00
A14A1U665	156-5282-00			IC,MISC:DMOS,ANALOG SWITCH;QUAD FETS;SD5400 ,SO14.150,TUBE	80009	156-5282-00
A14A2	671-1197-00	B010100	B010119	CIRCUIT BD ASSY:LOCKED 2ND LO	80009	671-1197-00
A14A2	671-1197-01	B010120		CIRCUIT BD ASSY:LOCKED 2ND LO	80009	671-1197-01
A14A2C100	283-5002-00			CAP,FXD,CER DI:1000PF,10%,50V	80009	283-5002-00
A14A2C200	283-5004-00			CAP,FXD,CER DI:0.1UF,10%,25V	80009	283-5004-00
A14A2C201	281-5002-00	B010100	B010119	CAP,VAR,PLASTIC:MULTI-TURN;0.1PF-2.5PF,150V ,TOP-ADJ;SMD,BULK	80009	281-5002-00

Component No.	Tektronix Part No.	Serial/Assembly No. Effective	Dscont	Name & Description	Mfr. Code	Mfr. Part No.
				(A COPPER WIRE LOOP REPLACES THIS CAP)		
A14A2C211	283-5011-00			CAP,FXD,CER DI:33PF,5%,50V	95275	VJ1206A330JXA
A14A2C212	283-5002-00			CAP,FXD,CER DI:1000PF,10%,50V	80009	283-5002-00
A14A2C220	283-5004-00			CAP,FXD,CER DI:0.1UF,10%,25V	80009	283-5004-00
A14A2C221	283-5004-00			CAP,FXD,CER DI:0.1UF,10%,25V	80009	283-5004-00
A14A2C225	283-5004-00			CAP,FXD,CER DI:0.1UF,10%,25V	80009	283-5004-00
A14A2C240	283-5004-00			CAP,FXD,CER DI:0.1UF,10%,25V	80009	283-5004-00
A14A2C242	283-5004-00			CAP,FXD,CER DI:0.1UF,10%,25V	80009	283-5004-00
A14A2C300	283-5004-00			CAP,FXD,CER DI:0.1UF,10%,25V	80009	283-5004-00
A14A2C323	290-5002-00			CAP,FXD,ELCTLT:10UF,20V	TK1424	20MC100M-TER
A14A2C340	283-5003-00			CAP,FXD,CER DI:0.01UF,10%,50V	80009	283-5003-00
A14A2C341	283-5004-00			CAP,FXD,CER DI:0.1UF,10%,25V	80009	283-5004-00
A14A2C420	283-5004-00			CAP,FXD,CER DI:0.1UF,10%,25V	80009	283-5004-00
A14A2C421	283-5011-00			CAP,FXD,CER DI:33PF,5%,50V	95275	VJ1206A330JXA
A14A2C422	283-5004-00			CAP,FXD,CER DI:0.1UF,10%,25V	80009	283-5004-00
A14A2C432	283-5004-00			CAP,FXD,CER DI:0.1UF,10%,25V	80009	283-5004-00
A14A2C433	283-5004-00			CAP,FXD,CER DI:0.1UF,10%,25V	80009	283-5004-00
A14A2C500	283-5004-00			CAP,FXD,CER DI:0.1UF,10%,25V	80009	283-5004-00
A14A2C520	283-5001-00			CAP,FXD,CER DI:100PF,5%,50V	80009	283-5001-00
A14A2C532	283-5004-00			CAP,FXD,CER DI:0.1UF,10%,25V	80009	283-5004-00
A14A2CR334	152-5004-00			DIODE,SIG:,ULTRA FAST;70V,0.15A,6NS,SER-PAI R;BAV99,SOT-23,8MM.TR	25088	BAV99T
A14A2CR335	152-5004-00			DIODE,SIG:,ULTRA FAST;70V,0.15A,6NS,SER-PAI R;BAV99,SOT-23,8MM TR	25088	BAV99T
A14A2CR336	152-5000-00			SEMICOND DVC,DI:SW,SI,70V,COM CATHODE	80009	152-5000-00
A14A2CR442	152-5000-00			SEMICOND DVC,DI:SW,SI,70V,COM CATHODE	80009	152-5000-00
A14A2P510	131-1857-00			CONN,HDR:PCB,;MALE,STR,1 X 36,0.1 CTR,0.230 MLG X 0.100 TAIL,GOLD;,,	58050	082-3644-SS10
A14A2Q112	151-5010-00			TRANSISTOR,SIG:BIPOLAR,NPN;12V,200MA,6.5GHZ ,AMPLIFIER;NE85634/2SC3357,SOT-89,12MM T/R	80009	151-5010-00
A14A2Q223	151-5000-00			TRANSISTOR,SIG:BIPOLAR,PNP;40V,200MA,250MHZ ,AMPLIFIER;MMBT3906L,TO-236/SOT-23,8MM T&R	04713	MMBT3906LT1
A14A2Q443	151-5001-00			TRANSISTOR,SIG:BIPOLAR,NPN;40V,200MA,300MHZ ,AMPLIFIER;MMBT3904L,TO-236/SOT-23,8MM T&R	80009	151-5001-00
A14A2R110	321-5008-00			RES,FXD:METAL FILM;150 OHM,1%,0.125W,TC=100 PPM;1206,T&R	80009	321-5008-00
A14A2R111	321-5008-00			RES,FXD:METAL FILM;150 OHM,1%,0.125W,TC=100 PPM;1206,T&R	80009	321-5008-00
A14A2R202	321-5016-00			RES,FXD:METAL FILM;681 OHM,1%,0.125W,TC=100 PPM;1206,T&R	01121	BCK6810FT
A14A2R203	321-5006-00			RES,FXD:METAL FILM;100 OHM,1%,0.125W,TC=100 PPM;1206,T&R	80009	321-5006-00
A14A2R204	321-5008-00			RES,FXD:METAL FILM;150 OHM,1%,0.125W,TC=100 PPM;1206,T&R	80009	321-5008-00
A14A2R213	321-5042-00			RES,FXD:METAL FILM;39.2 OHM,1%,0.125W,TC=10 0 PPM;1206,T&R	80009	321-5042-00
A14A2R214	321-5027-00			RES,FXD:METAL FILM;5.62K OHM,1%,0.125W,TC=1 00 PPM;1206,T&R	80009	321-5027-00
A14A2R215	321-5040-00			RES,FXD:METAL FILM;68.1K OHM,1%,0.125W,TC=1 00 PPM;1206,T&R	80009	321-5040-00
A14A2R216	321-5029-00			RES,FXD:METAL FILM;8.25K OHM,1%,0.125W,TC=1 00 PPM;1206,T&R	80009	321-5029-00
A14A2R222	321-5047-00			RES,FXD:METAL FILM;100K OHM,1%,0.125W,TC=10 0 PPM;1206,T&R	80009	321-5047-00
A14A2R224	321-5043-00			RES,FXD:METAL FILM;47.5 OHM,1%,0.125W,TC=10 0 PPM;1206,T&R	80009	321-5043-00
A14A2R231	321-5018-00			RES,FXD:METAL FILM;1.0K OHM,1%,0.125W,TC=10 0 PPM;1206,T&R	80009	321-5018-00

Component No.	Tektronix Part No.	Serial/Assembly No. Effective	Dscont	Name & Description	Mfr. Code	Mfr. Part No.
A14A2R232	321-5026-00			RES,FXD:METAL FILM;4.75K OHM,1%,0.125W,TC=100 PPM;1206,T&R	80009	321-5026-00
A14A2R241	321-5037-00			RES,FXD:METAL FILM;39.2K OHM,1%,0.125W,TC=100 PPM;1206,T&R	80009	321-5037-00
A14A2R310	321-5030-00			RES,FXD:METAL FILM;10.0K OHM,1%,0.125W,TC=100 PPM;1206,T&R	80009	321-5030-00
A14A2R320	321-5050-00			RES,FXD:METAL FILM;33.2 OHM,1%,0.125W,TC=100 PPM;1206,T&R	57668	MCR18FWEA33E2
A14A2R321	321-5047-00			RES,FXD:METAL FILM;100K OHM,1%,0.125W,TC=100 PPM;1206,T&R	80009	321-5047-00
A14A2R322	321-5048-00			RES,FXD:METAL FILM;332K OHM,1%,0.125W,TC=100 PPM;1206,T&R	80009	321-5048-00
A14A2R330	321-5047-00			RES,FXD:METAL FILM;100K OHM,1%,0.125W,TC=100 PPM;1206,T&R	80009	321-5047-00
A14A2R331	321-5047-00			RES,FXD:METAL FILM;100K OHM,1%,0.125W,TC=100 PPM;1206,T&R	80009	321-5047-00
A14A2R332	321-5030-00			RES,FXD:METAL FILM;10.0K OHM,1%,0.125W,TC=100 PPM;1206,T&R	80009	321-5030-00
A14A2R333	321-5034-00			RES,FXD:METAL FILM;22.1K OHM,1%,0.125W,TC=100 PPM;1206,T&R	80009	321-5034-00
A14A2R342	321-5022-00			RES,FXD:METAL FILM;2.21K OHM,1%,0.125W,TC=100 PPM;1206,T&R	80009	321-5022-00
A14A2R343	321-5030-00			RES,FXD:METAL FILM;10.0K OHM,1%,0.125W,TC=100 PPM;1206,T&R	80009	321-5030-00
A14A2R410	321-5043-00			RES,FXD:METAL FILM;47.5 OHM,1%,0.125W,TC=100 PPM;1206,T&R	80009	321-5043-00
A14A2R423	321-5000-00			RES,FXD:METAL FILM;10 OHM,1%,0.125W,TC=100 PPM;1206,T&R	57668	MCR18EZHFW10E
A14A2R425	321-5047-00			RES,FXD:METAL FILM;100K OHM,1%,0.125W,TC=100 PPM;1206,T&R	80009	321-5047-00
A14A2R430	321-5050-00			RES,FXD:METAL FILM;33.2 OHM,1%,0.125W,TC=100 PPM;1206,T&R	57668	MCR18FWEA33E2
A14A2R431	321-5022-00			RES,FXD:METAL FILM;2.21K OHM,1%,0.125W,TC=100 PPM;1206,T&R	80009	321-5022-00
A14A2R440	321-5024-00			RES,FXD:METAL FILM;3.32K OHM,1%,0.125W,TC=100 PPM;1206,T&R	80009	321-5024-00
A14A2R441	321-5018-00			RES,FXD:METAL FILM;1.0K OHM,1%,0.125W,TC=100 PPM;1206,T&R	80009	321-5018-00
A14A2R521	321-5004-00			RES,FXD:METAL FILM;22.1 OHM,1%,0.125W,TC=100 PPM;1206,T&R	80009	321-5004-00
A14A2R522	321-5008-00			RES,FXD:METAL FILM;150 OHM,1%,0.125W,TC=100 PPM;1206,T&R	80009	321-5008-00
A14A2R530	321-5000-00			RES,FXD:METAL FILM;10 OHM,1%,0.125W,TC=100 PPM;1206,T&R	57668	MCR18EZHFW10E
A14A2R531	321-5008-00			RES,FXD:METAL FILM;150 OHM,1%,0.125W,TC=100 PPM;1206,T&R	80009	321-5008-00
A14A2R535	311-5011-00			RES,VAR,NONWW:5K OHM,20%,0.2W	32997	3335W-1-502E
A14A2U230	156-5018-00			IC,LINEAR:BIPOLAR,OP-AMP;DUAL,SINGLE SUPPLY ;LM358D,SO8.150,TUBE	80009	156-5018-00
A14A2U424	156-5838-00			IC,DIGITAL:BIPOLAR,PRESCALER;DIVIDE BY 4,2.5GHZ;UPB585G,SO8M-1,TUBE	80009	156-5838-00
A14A2U444	156-5690-00			IC,LINEAR:BIPOLAR,OP-AMP;LOW NOISE;OP27GS,SO8.150,TUBE	80009	156-5690-00
A14A2U511	119-5001-00			MIXER,RING:+7DBM LO,SMD	80009	119-5001-00

Replaceable Electrical Parts List

Component Number	Tektronix Part Number	Serial No. Effective	Serial No. Discont'd	Name & Description	Mfr. Code	Mfr. Part Number
A15	621–0083–13	B031300	B031399	PWR SUPPLY ASSY:CIRCUIT BOARD W/CHASSIS	80009	621–0083–13
A15	621–0083–14	B041400		PWR SUPPLY ASSY:CIRCUIT BOARD W/CHASSIS,SHIELD	80009	621–0083–14
A15B15	119–5081–00	B010181		FAN,TUBEAXIAL:12VDC, 60mm X 60MM X 25.5MM,17.65CFM, 42DBA,3.24W,0.27A,SAFETYCONTROLLED	61058	FBA06A12U1A
A15B15	119–0830–07		B020964	FAN,TUBEAXIAL:12VDC,2.4W,6500 RPM,31 CFM BRUSHLESS DC MOTOR	61374	69.11.52 WITH 6
A15B15	119–5081–00	B020965		FAN,TUBEAXIAL:12VDC,2.60MMX60MMX25MM,17.65CFM 3.24W	61374	69.11.52 WITH 6
A15CR270	152–0839–00			DIODE,RECT:,500V,8A,50NS	04713	MUR850
A15F15	159–0023–00			FUSE,CARTRIDGE:3AG,2A,250V,SLOW BLOW,	71400	MDX2
A15Q250	151–1137–00			TRANSISTOR,PWR:MOS,N–CH;200V,9.0A,0.4 OHM	51993	IRF630 W/FORMED
A15Q251	151–1137–00			TRANSISTOR,PWR:MOS,N–CH;200V,9.0A,0.4 OHM	51993	IRF630 W/FORMED
A15Q270	151–1204–00			TRANSISTOR,PWR:MOS,N–CH;500V,8.8A,0.85 OHM	34371	IRFP440R
A15U120	152–1160–00			MODULE,HV:12KVDC ANODEOUT, –3KVDC CATHODE OUT	75498	149–0011–ED
A15W3	174–0187–00			CABLE ASSY,RF:50 OHM COAX,RIBBON	TK2469	174–0187–00
A15A1				(PART OF A15)		
A15A1C100	285–1255–00			CAP,FXD,PLASTIC:0.01UF,20%,3KV	84411	TEK266 .01 20 3
A15A1C101	285–1255–00			CAP,FXD,PLASTIC:0.01UF,20%,3KV	84411	TEK266 .01 20 3
A15A1C102	285–1255–00			CAP,FXD,PLASTIC:0.01UF,20%,3KV	84411	TEK266 .01 20 3
A15A1C103	290–0947–00			CAP,FXD,ELCTLT:33UF,+50–10%,160V W/SLEEVE ALUMINUM	0H1N5	CEUSM2C330–Q
A15A1C105	285–1255–00			CAP,FXD,PLASTIC:0.01UF,20%,3KV,	84411	TEK266 .01 20 3
A15A1C110	283–0279–00			CAP,FXD,CER DI:0.001UF,20%,3000V	18796	DHR12Y5S102M3K
A15A1C111	283–0279–00			CAP,FXD,CER DI:0.001UF,20%,3000V	18796	DHR12Y5S102M3K V
A15A1C130	283–0079–00		B031299	CAP,FXD,CER DI:0.01UF,20%,250V	04222	SR50VC103MAA
A15A1C130	283–0267–00	B031300		CAP,FXD,CER DI:0.01UF,20%,500V	59660	0841–546–Y550–01
A15A1C131	285–1192–00			CAP,FXD,PPR DI:0.0022 UF,20%,250VAC	TK0515	PME271Y422M
A15A1C145	285–1192–00			CAP,FXD,PPR DI:0.0022 UF,20%,250VAC	TK0515	PME271Y422M
A15A1C150	285–1252–00			CAP,FXD,PLASTIC:0.15UF,10%,250VAC	D5243	F1772–415–2000
A15A1C151	283–0057–00			CAP,FXD,CER DI:0.1UF,+80–20%,200V	04222	SR302E104ZAA
A15A1C152	283–0029–00			CAP,FXD,CER DI:0.005UF,5%,500V	59660	821–000B502J
A15A1C153	285–1252–00			CAP,FXD,PLASTIC:0.15UF,10%,250VAC	D5243	F1772–415–2000
A15A1C163	290–1247–00			CAP,FXD,ALUM:;1000UF,20%,100V,ESR=0.13 OHM (120HZ,20C),18 X 40MM	55680	UPR2A102MRH
A15A1C170	285–1252–00			CAP,FXD,PLASTIC:0.15UF,10%,250VAC	D5243	F1772–415–2000
A15A1C171	290–1249–00			CAP,FXD:ALUM;120UF,20%,400V	62643	82D121M400JD2
A15A1C172	285–1381–00			CAP,FXD,MTLZD:1500PF,10%,250V	TK0515	PME271Y415K
A15A1C173	285–1381–00			CAP,FXD,MTLZD:1500PF,10%,250V	TK0515	PME271Y415K
A15A1C174	285–1381–00			CAP,FXD,MTLZD:1500PF,10%,250V	TK0515	PME271Y415K
A15A1C175	285–1381–00			CAP,FXD,MTLZD:1500PF,10%,250V	TK0515	PME271Y415K
A15A1C176	285–1252–00			CAP,FXD,PLASTIC:0.15UF,10%,250VAC	D5243	F1772–415–2000
A15A1C185	285–1463–00			CAP,FXD,PLASTIC:METALIZED FILM CLASS X 2; 1UF,20%,250VAC,POLYESTER,0.70 X 1.24	4U402	F1773–510–2000
A15A1C190	283–0481–00			CAP,FXD,CER DI:220PF,10%,250VAC	18796	DE7090B221KVA1

Replaceable Electrical Parts List (Cont.)

Component Number	Tektronix Part Number	Serial No. Effective	Serial No. Discont'd	Name & Description	Mfr. Code	Mfr. Part Number
A15A1C200	290–0947–00			CAP,FXD,ELCTLT:33UF,+50–10%,160V W/SLEEVE ALUMINUM	0H1N5	CEUSM2C330–Q
A15A1C201	290–1248–00			CAP,FXD:ALUM;220UF,20%,63V	2N936	517D227M063CG6A
A15A1C202	290–1248–00			CAP,FXD:ALUM;220UF,20%,63V	2N936	517D227M063CG6A
A15A1C203	290–0963–00			CAP,FXD,ALUM:;220UF,+50–20%,25WVDC,10 X12MM	55680	UVX1V221MPA
A15A1C204	290–0963–00			CAP,FXD,ALUM:;220UF,+50–20%,25WVDC,10 X12MM	55680	UVX1V221MPA
A15A1C205	283–0057–00			CAP,FXD,CER DI:0.1UF,+80–20%,200V	04222	SR302E104ZAA
A15A1C212	290–0963–00			CAP,FXD,ALUM:;220UF,+50–20%,25WVDC,10 X12MM	55680	UVX1V221MPA
A15A1C213	290–0963–00			CAP,FXD,ALUM:;220UF,+50–20%,25WVDC,10 X12MM	55680	UVX1V221MPA
A15A1C214	290–0963–00			CAP,FXD,ALUM:;220UF,+50–20%,25WVDC,10 X12MM	55680	UVX1V221MPA
A15A1C220	283–0079–00			CAP,FXD,CER DI:0.01UF,20%,250V	04222	SR50VC103MAA
A15A1C239	283–0486–00			CAP,FXD,CER DI:1.0UF,10%,50V	04222	SR305C105KAA
A15A1C250	283–0029–00			CAP,FXD,CER DI:0.005UF,5%,500V	59660	821–000B502J
A15A1C262	283–0486–00		B031299	CAP,FXD,CER DI:1.0UF,10%,50V	04222	SR305C105KAA
A15A1C262	290–0536–00	B031300		CAP,FXD,ELCTLT:10UF,20%,25V TANTALUM	2N936	199D106X0025CA1
A15A1C270	283–0058–00			CAP,FXD,CER DI:0.027UF,10%,100V	04222	SR591C273KAA
A15A1C280	285–1463–00			CAP,FXD,PLASTIC:METALIZED FILM CLASS X 2; 1UF,20%,250VAC,POLYESTER,0.70 X 1.24	4U402	F1773–510–2000
A15A1C290	290–0973–00			CAP,FXD,ELCTLT:100UF,20%,25VDC	0H1N5	CEUSM1E101
A15A1C300	283–0057–00			CAP,FXD,CER DI:0.1UF,+80–20%,200V	04222	SR302E104ZAA
A15A1C301	283–0057–00			CAP,FXD,CER DI:0.1UF,+80–20%,200V	04222	SR302E104ZAA
A15A1C302	283–0057–00			CAP,FXD,CER DI:0.1UF,+80–20%,200V	04222	SR302E104ZAA
A15A1C303	283–0057–00			CAP,FXD,CER DI:0.1UF,+80–20%,200V	04222	SR302E104ZAA
A15A1C310	283–0212–00			CAP,FXD,CER DI:2UF,20%,50V	04222	SR405E205MAA
A15A1C311	283–0212–00			CAP,FXD,CER DI:2UF,20%,50V	04222	SR405E205MAA
A15A1C312	290–0963–00			CAP,FXD,ALUM:;220UF,+50–20%,25WVDC,10 X12MM	55680	UVX1V221MPA
A15A1C320	290–0963–00			CAP,FXD,ALUM:;220UF,+50–20%,25WVDC,10 X12MM	55680	UVX1V221MPA
A15A1C321	290–0963–00			CAP,FXD,ALUM:;220UF,+50–20%,25WVDC,10 X12MM	55680	UVX1V221MPA
A15A1C322	290–0963–00			CAP,FXD,ALUM:;220UF,+50–20%,25WVDC,10 X12MM	55680	UVX1V221MPA
A15A1C323	290–0963–00			CAP,FXD,ALUM:;220UF,+50–20%,25WVDC,10 X12MM	55680	UVX1V221MPA
A15A1C424	283–0486–00			CAP,FXD,CER DI:1.0UF,10%,50V	04222	SR305C105KAA
A15A1C425	283–0486–00			CAP,FXD,CER DI:1.0UF,10%,50V	04222	SR305C105KAA
A15A1C610	283–5004–00			CAP,FXD,CERAMIC:MLC;0.1UF,10%,25V	TK2058	C3216X7R1E104K
A15A1C620	283–5070–00			CAP,FXD,CERAMIC:MLC;0.01UF,10%,200V	04222	12102C103KAT1A
A15A1C621	283–5070–00			CAP,FXD,CERAMIC:MLC;0.01UF,10%,200V	04222	12102C103KAT1A
A15A1C630	283–5185–00			CAP,FXD,CERAMIC:MLC;1000PF,5%,50V	04222	12065A102JAT1A
A15A1C631	283–5185–00			CAP,FXD,CERAMIC:MLC;1000PF,5%,50V	04222	12065A102JAT1A
A15A1C632	283–5004–00			CAP,FXD,CERAMIC:MLC;0.1UF,10%,25V	TK2058	C3216X7R1E104K
A15A1C633	283–5185–00			CAP,FXD,CERAMIC:MLC;1000PF,5%,50V	04222	12065A102JAT1A
A15A1C634	283–5185–00			CAP,FXD,CERAMIC:MLC;1000PF,5%,50V	04222	12065A102JAT1A
A15A1C635	283–5004–00			CAP,FXD,CERAMIC:MLC;0.1UF,10%,25V	TK2058	C3216X7R1E104K

Replaceable Electrical Parts List (Cont.)

Component Number	Tektronix Part Number	Serial No. Effective	Serial No. Discont'd	Name & Description	Mfr. Code	Mfr. Part Number
A15A1C636	283–5014–00			CAP,FXD,CERAMIC:MLC;330PF,5%,50V	TK2058	C3216C0G1H331J
A15A1C638	283–5185–00			CAP,FXD,CERAMIC:MLC;1000PF,5%,50V	04222	12065A102JAT1A
A15A1C660	283–5004–00			CAP,FXD,CERAMIC:MLC;0.1UF,10%,25V	TK2058	C3216X7R1E104K
A15A1C661	283–5185–00			CAP,FXD,CERAMIC:MLC;1000PF,5%,50V	04222	12065A102JAT1A
A15A1C670	283–5004–00			CAP,FXD,CERAMIC:MLC;0.1UF,10%,25V	TK2058	C3216X7R1E104K
A15A1C671	283–5004–00			CAP,FXD,CERAMIC:MLC;0.1UF,10%,25V	TK2058	C3216X7R1E104K
A15A1C681	283–5003–00			CAP,FXD,CERAMIC:MLC;0.01UF,10%,50V	TK2058	C3216X7R1H103K
A15A1C682	283–5004–00			CAP,FXD,CERAMIC:MLC;0.1UF,10%,25V	TK2058	C3216X7R1E104K
A15A1C690	283–5185–00			CAP,FXD,CERAMIC:MLC;1000PF,5%,50V	04222	12065A102JAT1A
A15A1C691	283–5004–00			CAP,FXD,CERAMIC:MLC;0.1UF,10%,25V	TK2058	C3216X7R1E104K
A15A1C692	283–5003–00			CAP,FXD,CERAMIC:MLC;0.01UF,10%,50V	TK2058	C3216X7R1H103K
A15A1C710	283–5004–00			CAP,FXD,CERAMIC:MLC;0.1UF,10%,25V	TK2058	C3216X7R1E104K
A15A1C720	283–5070–00			CAP,FXD,CERAMIC:MLC;0.01UF,10%,200V	04222	12102C103KAT1A
A15A1C732	283–5004–00			CAP,FXD,CERAMIC:MLC;0.1UF,10%,25V	TK2058	C3216X7R1E104K
A15A1C750	290–0920–00			CAP,FXD,ALUM:;33UF,20%,50V,6 X 11MM,0.1SP	55680	UVX1H330MEA
A15A1C760	283–5070–00			CAP,FXD,CERAMIC:MLC;0.01UF,10%,200V	04222	12102C103KAT1A
A15A1C780	283–5004–00			CAP,FXD,CERAMIC:MLC;0.1UF,10%,25V	TK2058	C3216X7R1E104K
A15A1C781	283–5185–00			CAP,FXD,CERAMIC:MLC;1000PF,5%,50V	04222	12065A102JAT1A
A15A1C782	283–5185–00			CAP,FXD,CERAMIC:MLC;1000PF,5%,50V	04222	12065A102JAT1A
A15A1C783	283–5003–00			CAP,FXD,CERAMIC:MLC;0.01UF,10%,50V	TK2058	C3216X7R1H103K
A15A1C800	283–5004–00			CAP,FXD,CERAMIC:MLC;0.1UF,10%,25V	TK2058	C3216X7R1E104K
A15A1C810	283–5018–00			CAP,FXD,CERAMIC:MLC;0.033UF,10%,50V	TK2058	C3216X7R1H333K
A15A1C811	283–5018–00			CAP,FXD,CERAMIC:MLC;0.033UF,10%,50V	TK2058	C3216X7R1H333K
A15A1C812	283–5018–00			CAP,FXD,CERAMIC:MLC;0.033UF,10%,50V	TK2058	C3216X7R1H333K
A15A1C813	283–5185–00			CAP,FXD,CERAMIC:MLC;1000PF,5%,50V	04222	12065A102JAT1A
A15A1C814	283–5004–00			CAP,FXD,CERAMIC:MLC;0.1UF,10%,25V	TK2058	C3216X7R1E104K
A15A1C815	283–5185–00			CAP,FXD,CERAMIC:MLC;1000PF,5%,50V	04222	12065A102JAT1A
A15A1C820	283–5004–00			CAP,FXD,CERAMIC:MLC;0.1UF,10%,25V	TK2058	C3216X7R1E104K
A15A1C822	283–5004–00			CAP,FXD,CERAMIC:MLC;0.1UF,10%,25V	TK2058	C3216X7R1E104K
A15A1C830	283–5004–00			CAP,FXD,CERAMIC:MLC;0.1UF,10%,25V	TK2058	C3216X7R1E104K
A15A1C834	283–5004–00			CAP,FXD,CERAMIC:MLC;0.1UF,10%,25V	TK2058	C3216X7R1E104K
A15A1C840	283–5004–00			CAP,FXD,CERAMIC:MLC;0.1UF,10%,25V	TK2058	C3216X7R1E104K
A15A1C850	283–5004–00			CAP,FXD,CERAMIC:MLC;0.1UF,10%,25V	TK2058	C3216X7R1E104K
A15A1C860	283–5004–00			CAP,FXD,CERAMIC:MLC;0.1UF,10%,25V	TK2058	C3216X7R1E104K
A15A1C861	283–5004–00			CAP,FXD,CERAMIC:MLC;0.1UF,10%,25V	TK2058	C3216X7R1E104K
A15A1C870	283–5004–00			CAP,FXD,CERAMIC:MLC;0.1UF,10%,25V	TK2058	C3216X7R1E104K
A15A1C900	283–5009–00			CAP,FXD,CERAMIC:MLC;15PF,5%,50V	TK2058	C3216C0G1H150J
A15A1C901	283–5004–00			CAP,FXD,CERAMIC:MLC;0.1UF,10%,25V	TK2058	C3216X7R1E104K
A15A1C902	283–5004–00			CAP,FXD,CERAMIC:MLC;0.1UF,10%,25V	TK2058	C3216X7R1E104K
A15A1C903	283–5004–00			CAP,FXD,CERAMIC:MLC;0.1UF,10%,25V	TK2058	C3216X7R1E104K
A15A1C904	283–5004–00			CAP,FXD,CERAMIC:MLC;0.1UF,10%,25V	TK2058	C3216X7R1E104K

Replaceable Electrical Parts List (Cont.)

Component Number	Tektronix Part Number	Serial No. Effective	Serial No. Discont'd	Name & Description	Mfr. Code	Mfr. Part Number
A15A1C905	283–5004–00			CAP,FXD,CERAMIC:MLC;0.1UF,10%,25V	TK2058	C3216X7R1E104K
A15A1C910	283–5004–00			CAP,FXD,CERAMIC:MLC;0.1UF,10%,25V	TK2058	C3216X7R1E104K
A15A1C911	283–5004–00			CAP,FXD,CERAMIC:MLC;0.1UF,10%,25V	TK2058	C3216X7R1E104K
A15A1C912	283–5004–00			CAP,FXD,CERAMIC:MLC;0.1UF,10%,25V	TK2058	C3216X7R1E104K
A15A1C913	283–5004–00			CAP,FXD,CERAMIC:MLC;0.1UF,10%,25V	TK2058	C3216X7R1E104K
A15A1C914	283–5009–00			CAP,FXD,CERAMIC:MLC;15PF,5%,50V	TK2058	C3216C0G1H150J
A15A1C915	283–5004–00			CAP,FXD,CERAMIC:MLC;0.1UF,10%,25V	TK2058	C3216X7R1E104K
A15A1C916	283–5003–00			CAP,FXD,CERAMIC:MLC;0.01UF,10%,50V	TK2058	C3216X7R1H103K
A15A1C920	283–5004–00			CAP,FXD,CERAMIC:MLC;0.1UF,10%,25V	TK2058	C3216X7R1E104K
A15A1C930	283–5004–00			CAP,FXD,CERAMIC:MLC;0.1UF,10%,25V	TK2058	C3216X7R1E104K
A15A1CR180	152–0848–01			DIODE,RECT:,BRIDGE,600V,2A,350NS;BR860DF	6L334	BR86DF
A15A1CR200	152–0808–00			DIODE,RECT:,ULTRA FAST;400V,1.5A,50NS	0LUA3	BYD73G
A15A1CR201	152–0808–00			DIODE,RECT:,ULTRA FAST;400V,1.5A,50NS	0LUA3	BYD73G
A15A1CR220	152–0600–00			DIODE,RECT:SCHTKY,;35V,15A,150A IFSM,0.57VF	04713	MBR1535CT
A15A1CR221	152–0884–00			DIODE,RECT:,SCHTKY;35V,16A,150A IFSM,630MVF	04713	MBR1635
A15A1CR222	152–0600–00			DIODE,RECT:SCHTKY,;35V,15A,150A IFSM,0.57VF	04713	MBR1535CT
A15A1CR223	152–0884–00			DIODE,RECT:,SCHTKY;35V,16A,150A IFSM,630MVF	04713	MBR1635
A15A1CR250	152–0808–00			DIODE,RECT:,ULTRA FAST;400V,1.5A,50NS	0LUA3	BYD73G
A15A1CR260	152–0808–00			DIODE,RECT:,ULTRA FAST;400V,1.5A,50NS	0LUA3	BYD73G
A15A1CR271	152–0808–00			DIODE,RECT:,ULTRA FAST;400V,1.5A,50NS	0LUA3	BYD73G
A15A1CR272	152–0808–00			DIODE,RECT:,ULTRA FAST;400V,1.5A,50NS	0LUA3	BYD73G
A15A1CR273	152–0808–00			DIODE,RECT:,ULTRA FAST;400V,1.5A,50NS	0LUA3	BYD73G
A15A1CR290	152–0808–00			DIODE,RECT:,ULTRA FAST;400V,1.5A,50NS	0LUA3	BYD73G
A15A1CR520	152–5008–00			DIODE,RECT:,;400V,1A,MONOLITHIC COM–CATH	25088	BAW79D–E6327
A15A1CR521	152–5008–00			DIODE,RECT:,;400V,1A,MONOLITHIC COM–CATH	25088	BAW79D–E6327
A15A1CR530	152–5008–00		B031299	DIODE,RECT:,;400V,1A,MONOLITHIC COM–CATH	25088	BAW79D–E6327
A15A1CR530	152–0586–00	B031300		SEMICOND DVC,DI:RECT,SI,600V,0.5A MI	0LUA3	BYV96D OR BYV95C
A15A1CR531	152–5008–00		B031299	DIODE,RECT:,;400V,1A,MONOLITHIC COM–CATH	25088	BAW79D–E6327
A15A1CR531	152–0586–00	B031300		SEMICOND DVC,DI:RECT,SI,600V,0.5A MI	0LUA3	BYV96D OR BYV95C
A15A1CR602	152–5008–00			DIODE,RECT:,;400V,1A,MONOLITHIC COM–CATH	25088	BAW79D–E6327
A15A1CR610	152–5008–00			DIODE,RECT:,;400V,1A,MONOLITHIC COM–CATH	25088	BAW79D–E6327
A15A1CR611	152–5008–00			DIODE,RECT:,;400V,1A,MONOLITHIC COM–CATH	25088	BAW79D–E6327
A15A1CR620	152–5008–00			DIODE,RECT:,;400V,1A,MONOLITHIC COM–CATH	25088	BAW79D–E6327
A15A1CR621	152–5008–00			DIODE,RECT:,;400V,1A,MONOLITHIC COM–CATH	25088	BAW79D–E6327
A15A1CR622	152–5008–00			DIODE,RECT:,;400V,1A,MONOLITHIC COM–CATH	25088	BAW79D–E6327
A15A1CR623	152–5008–00			DIODE,RECT:,;400V,1A,MONOLITHIC COM–CATH	25088	BAW79D–E6327
A15A1CR640	152–0808–00			DIODE,RECT:,ULTRA FAST;400V,1.5A,50NS	0LUA3	BYD73G
A15A1CR660	152–5000–00			DIODE,SIG:,ULTRA FAST;70V,0.15A,6NS,COM–CATH	0LUA3	BAV70TRL
A15A1CR661	152–5000–00			DIODE,SIG:,ULTRA FAST;70V,0.15A,6NS,COM–CATH	0LUA3	BAV70TRL

Replaceable Electrical Parts List (Cont.)

Component Number	Tektronix Part Number	Serial No. Effective	Serial No. Discont'd	Name & Description	Mfr. Code	Mfr. Part Number
A15A1CR680	152–5005–00			DIODE,SIG:,ULTRA FAST;70V,0.15A,6NS,COM–ANODE	04713	BAW56LT1
A15A1CR700	152–5000–00			DIODE,SIG:,ULTRA FAST;70V,0.15A,6NS,COM–CATH	0LUA3	BAV70TRL
A15A1CR710	152–5000–00			DIODE,SIG:,ULTRA FAST;70V,0.15A,6NS,COM	0LUA3	BAV70TRL
A15A1CR731	152–5008–00			DIODE,RECT:,;400V,1A,MONOLITHIC COM–CATH	25088	BAW79D–E6327
A15A1CR740	152–0808–00			DIODE,RECT:,ULTRA FAST;400V,1.5A,50NS	0LUA3	BYD73G
A15A1CR750	152–5005–00			DIODE,SIG:,ULTRA FAST;70V,0.15A,6NS,COM–ANODE	04713	BAW56LT1
A15A1CR780	152–5005–00			DIODE,SIG:,ULTRA FAST;70V,0.15A,6NS,COM–ANODE	04713	BAW56LT1
A15A1CR810	152–5008–00			DIODE,RECT:,;400V,1A,MONOLITHIC COM–CATH	25088	BAW79D–E6327
A15A1CR811	152–5008–00			DIODE,RECT:,;400V,1A,MONOLITHIC COM–CATH	25088	BAW79D–E6327
A15A1CR812	152–5005–00			DIODE,SIG:,ULTRA FAST;70V,0.15A,6NS,COM–ANODE	04713	BAW56LT1
A15A1CR820	152–5008–00			DIODE,RECT:,;400V,1A,MONOLITHIC COM–CATH	25088	BAW79D–E6327
A15A1CR821	152–5008–00			DIODE,RECT:,;400V,1A,MONOLITHIC COM–CATH	25088	BAW79D–E6327
A15A1E110	119–0181–00			ARSR,ELEC SURGE:230V, +/–15%; GAS DISCHARGE	0C8T6	BBS–230V +/–15%
A15A1J3	131–3774–00			CONN,HDR:PCB,;MALE,STR,2 X 36,0.1 CTR,0.230	22526	67996–172
A15A1J6	131–3774–00			CONN,HDR:PCB,;MALE,STR,2 X 36,0.1 CTR,0.230	22526	67996–172
A15A1J7	131–3557–00			CONN,HDR::PCB,;MALE,STR,2 X 12,0.1 CTR,0.555 H X0.177 TAIL,SHRD/4 SIDES,W/CARD SLOT &	22526	67273–012
A15A1J8	131–3557–00			CONN,HDR::PCB,;MALE,STR,2 X 12,0.1 CTR,0.555 H X0.177 TAIL,SHRD/4 SIDES,W/CARD SLOT &	22526	67273–012
A15A1J9	131–3557–00			CONN,HDR::PCB,;MALE,STR,2 X 12,0.1 CTR,0.555 H X0.177 TAIL,SHRD/4 SIDES,W/CARD SLOT &	22526	67273–012
A15A1J10	131–3557–00			CONN,HDR::PCB,;MALE,STR,2 X 12,0.1 CTR,0.555 H X 0.177 TAIL,SHRD/4 SIDES,W/CARD SLOT &	22526	67273–012
A15A1J11	131–3557–00			CONN,HDR::PCB,;MALE,STR,2 X 12,0.1 CTR,0.555 H X0.177 TAIL,SHRD/4 SIDES,W/CARD SLOT &	22526	67273–012
A15A1J12	131–3557–00			CONN,HDR::PCB,;MALE,STR,2 X 12,0.1 CTR,0.555 H X0.177 TAIL,SHRD/4 SIDES,W/CARD SLOT &	22526	67273–012
A15A1J930	131–1425–00			CONN,HDR:PCB,;MALE,RTANG,1 X 36,0.1CTR,0.23 0 MLG X 0.090 TAIL,30 GOLD,STACKABLE	22526	65521–136
A15A1L100	108–1262–00			INDUCTOR,FXD:POWER;100UH,10%,I<0.75A,RDC<0.23 OHM,Q>15,SRF>5.4MHZ,BOBBIN CORE	TK2058	TSL0807–101KR75
A15A1L170	108–1441–00			COIL,RF:8.8UH,20%	0JR03	108–1441–00
A15A1L200	108–1262–00			INDUCTOR,FXD:POWER;100UH,10%,I<0.75A,RDC<0. 23 OHM,Q>15,SRF>5.4MHZ,BOBBIN CORE	TK2058	TSL0807–101KR75
A15A1L201	108–0958–00			INDUCTOR,FXD:CUSTOM,POWER;50UH,10%,IDC<3 A,RDC<0.027 OHM,BOBBIN 276–0240–00,30.5T W/20	0JR03	108–0958–00
A15A1L202	108–0958–00			INDUCTOR,FXD:CUSTOM,POWER;50UH,10%,IDC<3 A,RDC<0.027 OHM,BOBBIN 276–0240–00,30.5T W/20	0JR03	108–0958–00
A15A1L210	108–1263–00			INDUCTOR,FXD:POWER;10UH,10%,I<2.1A,RDC<0.043 OHM,Q>20,SRF>19MHZ,BOBBIN	TK2058	TSL0707–100K1R9
A15A1L211	108–1263–00			INDUCTOR,FXD:POWER;10UH,10%,I<2.1A,RDC<0.043 OHM,Q>20,SRF>19MHZ,BOBBIN	TK2058	TSL0707–100K1R9
A15A1L212	276–0635–00			CORE,EM:TOROID;FERRITE,UO=5,000 20% (1KHZ) (MUST BE REPLACED WITH PART # 177–0685–00).	02114	768 T188/3E2A
A15A1L213	108–0554–00			INDUCTOR,FXD:CUSTOM,POWER;5UH,20%,I<7A,RDC< 0.01 OHM,ROD CORE 276–0147–00	0JR03	108–0554–00

Replaceable Electrical Parts List (Cont.)

Component Number	Tektronix Part Number	Serial No. Effective	Serial No. Discont'd	Name & Description	Mfr. Code	Mfr. Part Number
A15A1L214	108–0958–00			INDUCTOR,FXD:CUSTOM,POWER;50UH,10%,IDC<3 A, RDC<0.027 OHM,BOBBIN 276–0240–00,30.5T W/20	0JR03	108–0958–00
A15A1L215	108–1263–00			INDUCTOR,FXD:POWER;10UH,10%,I<2.1A,RDC<0.043 OHM,Q>20,SRF>19MHZ,BOBBIN	TK2058	TSL0707–100K1R9
A15A1L216	108–1442–00			INDUCTOR,FXD:SIGNAL;10UH,20%,TOROID CORE 276–0603–00	0JR03	108–1442–00
A15A1L217	108–1442–00			INDUCTOR,FXD:SIGNAL;10UH,20%,TOROID CORE 276–0603–00	0JR03	108–1442–00
A15A1L241	108–0828–00			INDUCTOR,FXD:CUSTOM,POWER;56.4UH,IDC<3.2 A, RDC<0.017 OHM,TOROID CORE 276–0603–00,TD–565	0JR03	108–0828–00
A15A1L250	108–0828–00			INDUCTOR,FXD:CUSTOM,POWER;56.4UH,IDC<3.2 A, RDC<0.017 OHM,TOROID CORE 276–0603–00,TD–565	0JR03	108–0828–00
A15A1L310	108–1262–00			INDUCTOR,FXD:POWER;100UH,10%,I<0.75A,RDC<0.23 OHM,Q>15,SRF>5.4MHZ,BOBBIN CORE	TK2058	TSL0807–101KR75
A15A1L320	108–1262–00			INDUCTOR,FXD:POWER;100UH,10%,I<0.75A,RDC<0.23 OHM,Q>15,SRF>5.4MHZ,BOBBIN CORE	TK2058	TSL0807–101KR75
A15A1L330	108–1442–00			INDUCTOR,FXD:SIGNAL;10UH,20%,TOROID CORE 276–0603–00	0JR03	108–1442–00
A15A1Q130	151–0678–00		B031299	TRANSISTOR,PWR:BIPOLAR,NPN;400V,4.0A,SWITCHING	04713	MJE13005
A15A1Q130	151–1088–00	B031300		TRANSISTOR,PWR:MOS,N–CH;600V,1.0A,12 OHM		
A15A1Q250	151–1137–00			TRANSISTOR,PWR:MOS,N–CH,200V,9.0A,0.4 OHM,IRF630,TO–220 W/FORMED LEADS	04713	STP4064LFCF
A15A1Q251	151–1137–00			TRANSISTOR,PWR:MOS,N–CH,200V,9.0A,0.4 OHM,IRF630,TO–220 W/FORMED LEADS	04713	STP4064LFCF
A15A1Q400	151–0619–00			TRANSISTOR,SIG:BIPOLAR,NPN;35V,20MA,SUPERMATCHED DUAL	24355	MATO2EH
A15A1Q410	151–0619–00			TRANSISTOR,SIG:BIPOLAR,NPN;35V,20MA,SUPERMATCHED DUAL	24355	MATO2EH
A15A1Q610	151–5000–00			TRANSISTOR,SIG:BIPOLAR,PNP;40V,200MA,250MHZ AMPLIFIER	0LUA3	PMBT3906TRL
A15A1Q611	151–5006–00			TRANSISTOR,SIG:BIPOLAR,NPN;300V,50MA,50MHZ, AMPLIFIER	0LUA3	BF620
A15A1Q680	151–5000–00			TRANSISTOR,SIG:BIPOLAR,PNP;40V,200MA,250MHZ AMPLIFIER	0LUA3	PMBT3906TRL
A15A1Q690	151–5001–00			TRANSISTOR,SIG:BIPOLAR,NPN;40V,200MA,300MHZ AMPLIFIER	0LUA3	PMBT3904TRL
A15A1Q691	151–5000–00			TRANSISTOR,SIG:BIPOLAR,PNP;40V,200MA,250MHZ, AMPLIFIER	0LUA3	PMBT3906TRL
A15A1Q700	151–5006–00			TRANSISTOR,SIG:BIPOLAR,NPN;300V,50MA,50MHZ, AMPLIFIER	0LUA3	BF620
A15A1Q720	151–5006–00			TRANSISTOR,SIG:BIPOLAR,NPN;300V,50MA,50MHZ, AMPLIFIER	0LUA3	BF620
A15A1Q751	151–5002–00			TRANSISTOR,SIG:JFET,N–CH;5V,75MA,60 OHM,SWI TCH	04713	MMBF4392LT1
A15A1Q752	151–5001–00			TRANSISTOR,SIG:BIPOLAR,NPN;40V,200MA,300MHZ AMPLIFIER	0LUA3	PMBT3904TRL
A15A1Q753	151–5000–00			TRANSISTOR,SIG:BIPOLAR,PNP;40V,200MA,250MHZ AMPLIFIER	0LUA3	PMBT3906TRL
A15A1Q800	151–5006–00			TRANSISTOR,SIG:BIPOLAR,NPN;300V,50MA,50MHZ, AMPLIFIER	0LUA3	BF620

Replaceable Electrical Parts List (Cont.)

Component Number	Tektronix Part Number	Serial No. Effective	Serial No. Discont'd	Name & Description	Mfr. Code	Mfr. Part Number
A15A1Q801	151–5006–00			TRANSISTOR,SIG:BIPOLAR,NPN;300V,50MA,50MHZ, AMPLIFIER	0LUA3	BF620
A15A1Q811	151–5006–00			TRANSISTOR,SIG:BIPOLAR,NPN;300V,50MA,50MHZ, AMPLIFIER	0LUA3	BF620
A15A1Q812	151–5006–00			TRANSISTOR,SIG:BIPOLAR,NPN;300V,50MA,50MHZ, AMPLIFIER	0LUA3	BF620
A15A1Q820	151–5006–00			TRANSISTOR,SIG:BIPOLAR,NPN;300V,50MA,50MHZ, AMPLIFIER	0LUA3	BF620
A15A1Q900	151–5001–00			TRANSISTOR,SIG:BIPOLAR,NPN;40V,200MA,300MHZ AMPLIFIER	0LUA3	PMBT3904TRL
A15A1Q901	151–5001–00			TRANSISTOR,SIG:BIPOLAR,NPN;40V,200MA,300MHZ AMPLIFIER	0LUA3	PMBT3904TRL
A15A1Q922	151–5001–00			TRANSISTOR,SIG:BIPOLAR,NPN;40V,200MA,300MHZ AMPLIFIER	0LUA3	PMBT3904TRL
A15A1Q923	151–5001–00			TRANSISTOR,SIG:BIPOLAR,NPN;40V,200MA,300MHZ AMPLIFIER	0LUA3	PMBT3904TRL
A15A1Q924	151–5000–00			TRANSISTOR,SIG:BIPOLAR,PNP;40V,200MA,250MHZ AMPLIFIER	0LUA3	PMBT3906TRL
A15A1Q925	151–5001–00			TRANSISTOR,SIG:BIPOLAR,NPN;40V,200MA,300MHZ AMPLIFIER	0LUA3	PMBT3904TRL
A15A1Q930	151–5000–00			TRANSISTOR,SIG:BIPOLAR,PNP;40V,200MA,250MHZ AMPLIFIER	0LUA3	PMBT3906TRL
A15A1R110	311–1968–00			RES,VAR,NONWW:PNL,5M OHM,20%,0.5W	12697	72M4N048S505M
A15A1R120	315–0625–00			RES,FXD,FILM:6.2M OHM,5%,0.25W	TK1727	SFR25 2322–181
A15A1R151	308–0236–00			RES,FXD,WW:85 OHM,5%,3W	00213	1240S–85 OHM 5
A15A1R152	301–0273–00			RES,FXD,FILM:27K OHM,5%,0.5W	TK1727	SFR30 2322–182
A15A1R170	301–0474–00			RES,FXD,FILM:470K OHM,5%,0.5W	TK1727	SFR30 2322–182
A15A1R185	303–0154–00			RES,FXD,CMPSN:150K OHM,5%,1W	24546	FP1 150 K OHM 5
A15A1R240	308–0399–01			RES,FXD,WW:10 OHM,5%,5W	91637	CW5–10ROJ–BULK
A15A1R250	308–0236–00			RES,FXD,WW:85 OHM,5%,3W	00213	1240S–85 OHM 5
A15A1R260	308–0643–00			RES,FXD,WW:0.10 OHM,3%,3W	TK2096	KM300 0.1 OHM +
A15A1R261	308–0292–00		B031299	RES,FXD,WW:2.2K OHM,5%,3W	91637	CW–2B 2.2K 5 PE
A15A1R261	308–0281–00	B031300		RES,FXD,WW:1.8K OHM,5%,3W	09969	FP69 1.8K 5%
A15A1R500	321–5049–00			RES,FXD:THICK FILM;1M OHM,1%,0.125W,TC=100 PPM	57668	MCR18FXEA1M
A15A1R501	321–5049–00			RES,FXD:THICK FILM;1M OHM,1%,0.125W,TC=100 PPM	57668	MCR18FXEA1M
A15A1R502	321–5049–00			RES,FXD:THICK FILM;1M OHM,1%,0.125W,TC=100 PPM	57668	MCR18FXEA1M
A15A1R503	321–5049–00			RES,FXD:THICK FILM;1M OHM,1%,0.125W,TC=100 PPM	57668	MCR18FXEA1M
A15A1R504	321–5049–00			RES,FXD:THICK FILM;1M OHM,1%,0.125W,TC=100 PPM	57668	MCR18FXEA1M
A15A1R505	321–5049–00			RES,FXD:THICK FILM;1M OHM,1%,0.125W,TC=100 PPM	57668	MCR18FXEA1M
A15A1R506	321–5049–00			RES,FXD:THICK FILM;1M OHM,1%,0.125W,TC=100 PPM	57668	MCR18FXEA1M
A15A1R507	321–5049–00			RES,FXD:THICK FILM;1M OHM,1%,0.125W,TC=100 PPM	57668	MCR18FXEA1M
A15A1R508	321–5049–00			RES,FXD:THICK FILM;1M OHM,1%,0.125W,TC=100 PPM	57668	MCR18FXEA1M
A15A1R509	321–5049–00			RES,FXD:THICK FILM;1M OHM,1%,0.125W,TC=100 PPM	57668	MCR18FXEA1M

Replaceable Electrical Parts List (Cont.)

Component Number	Tektronix Part Number	Serial No. Effective	Serial No. Discont'd	Name & Description	Mfr. Code	Mfr. Part Number
A15A1R510	321–5027–00			RES,FXD:THICK FILM;5.62K OHM,1%,0.125W,TC=100 PPM	50139	BCK5621FT
A15A1R511	321–5027–00			RES,FXD:THICK FILM;5.62K OHM,1%,0.125W,TC=100 PPM	50139	BCK5621FT
A15A1R520	321–5016–00			RES,FXD:THICK FILM;681 OHM,1%,0.125W,TC=100 PPM	50139	BCK6810FT
A15A1R521	321–5004–00			RES,FXD:THICK FILM;22.1 OHM,1%,0.125W,TC=100 PPM	57668	MCR18FWEA22E1
A15A1R522	321–5004–00			RES,FXD:THICK FILM;22.1 OHM,1%,0.125W,TC=100 PPM	57668	MCR18FWEA22E1
A15A1R531	321–5041–00			RES,FXD:THICK FILM;82.5K OHM,1%,0.125W,TC=100 PPM	50139	BCK8252FT
A15A1R532	321–5041–00			RES,FXD:THICK FILM;82.5K OHM,1%,0.125W,TC=100 PPM	50139	BCK8252FT
A15A1R534	321–5030–00			RES,FXD:THICK FILM;10.0K OHM,1%,0.125W,TC=100 PPM	50139	BCK1002FT
A15A1R535	321–5010–00			RES,FXD:THICK FILM;221 OHM,1%,0.125W,TC=100 PPM	50139	BCK221FT
A15A1R536	321–5010–00			RES,FXD:THICK FILM;221 OHM,1%,0.125W,TC=100 PPM	50139	BCK221FT
A15A1R537	321–5010–00			RES,FXD:THICK FILM;221 OHM,1%,0.125W,TC=100 PPM	50139	BCK221FT
A15A1R550	321–5000–00		B031094	RES,FXD:THICK FILM;10 OHM,1%,0.125W,TC=100 PPM	59124	RK73H2B10R0FT
A15A1R550A	321–5487–00	B031095	B031299	RES,FXD:THICK FILM,22.6 OHM, 1%,0.250W, TC=100PPM,1210,T&R,SMD	09969	CRCW1210–22R6F RT2
A15A1R550B	321–5487–00	B031095	B031299	RES,FXD:THICK FILM,22.6 OHM, 1%,0.250W, TC=100PPM,1210,T&R,SMD	09969	CRCW1210–22R6F RT2
A15A1R550	321–5523–00	B031300		RES,FXD,FILM:THICK FILM,22 OHM,5%,800MW,200V	56845	RCWP2010–6
A15A1R551	321–5000–00		B031095	RES,FXD:THICK FILM;10 OHM,1%,0.125W	91637	CRCW120610R0FT
A15A1R551A	321–5487–00	B031094	B031299	RES,FXD:THICK FILM,22.6 OHM, 1%,0.250W, TC=100PPM,1210,T&R,SMD	09969	CRCW1210–22R6F RT2
A15A1R551B	321–5487–00	B031094	B031299	RES,FXD:THICK FILM,22.6 OHM, 1%,0.250W, TC=100PPM,1210,T&R,SMD	09969	CRCW1210–22R6F RT2
A15A1R551	321–5523–00	B031300		RES,FXD,FILM:THICK FILM,22 OHM,5%,800MW,200V	56845	RCWP2010–6
A15A1R552	321–5523–00	B031300		RES,FXD,FILM:THICK FILM,22 OHM,5%,800MW,200V	56845	RCWP2010–6
A15A1R553	321–5523–00	B031300		RES,FXD,FILM:THICK FILM,22 OHM,5%,800MW,200V	56845	RCWP2010–6
A15A1R570	321–5000–00		B031094	RES,FXD:THICK FILM;10 OHM,1%,0.125W,TC=100 PPM	59124	RK73H2B10R0FT
A15A1R570A	321–5487–00	B031095	B031299	RES,FXD:THICK FILM,22.6 OHM, 1%,0.250W, TC=100PPM,1210,T&R,SMD	09969	CRCW1210–22R6F RT2
A15A1R570B	321–5487–00	B031095	B031299	RES,FXD:THICK FILM,22.6 OHM, 1%,0.250W, TC=100PPM,1210,T&R,SMD	09969	CRCW1210–22R6F RT2
A15A1R570	321–5523–00	B031300		RES,FXD,FILM:THICK FILM,22 OHM,5%,800MW,200V	56845	RCWP2010–6
A15A1R571	321–5000–00		B031299	RES,FXD:THICK FILM;10 OHM,1%,0.125W	91637	CRCW120610R0FT
A15A1R571	321–5523–00	B031300		RES,FXD,FILM:THICK FILM,22 OHM,5%,800MW,200V	56845	RCWP2010–6
A15A1R600	321–5017–00			RES,FXD:THICK FILM;825 OHM,1%,0.125W,TC=100 PPM	50139	BCK8250FT
A15A1R601	321–5017–00			RES,FXD:THICK FILM;825 OHM,1%,0.125W,TC=100 PPM	50139	BCK8250FT
A15A1R602	321–5017–00			RES,FXD:THICK FILM;825 OHM,1%,0.125W,TC=100 PPM	50139	BCK8250FT
A15A1R603	321–5017–00			RES,FXD:THICK FILM;825 OHM,1%,0.125W,TC=100 PPM	50139	BCK8250FT
A15A1R604	321–5026–00			RES,FXD:THICK FILM;4.75K OHM,1%,0.125W,TC=100 PPM	50139	BCK4751FT
A15A1R605	321–5044–00			RES,FXD:THICK FILM;56.2 OHM,1%,0.125W,TC=100 PPM	50139	BCD56R2FT
A15A1R606	321–5022–00		B031399	RES,FXD:THICK FILM;2.21K OHM,1%,0.125W,TC=100 PPM	50139	BCK2211FT
A15A1R606	321–5018–00	B041400		RES,FXD:THICK FILM,1.0K OHM,1%,0.125W,TC=100 PPM	50139	BCK1001FT

Replaceable Electrical Parts List (Cont.)

Component Number	Tektronix Part Number	Serial No. Effective	Serial No. Discont'd	Name & Description	Mfr. Code	Mfr. Part Number
A15A1R610	321–5010–00			RES,FXD:THICK FILM;221 OHM,1%,0.125W,TC=100 PPM	50139	BCK221FT
A15A1R611	321–5022–00		B031399	RES,FXD:THICK FILM;2.21K OHM,1%,0.125W,TC=100 PPM	50139	BCK2211FT
A15A1R611	321–5025–00	B041400		RES,FXD:THICK FILM,3.92K OHM,1%,0.125W,TC=100 PPM	50139	BCK3921FT
A15A1R612	321–5022–00		B031399	RES,FXD:THICK FILM;2.21K OHM,1%,0.125W,TC=100 PPM	50139	BCK2211FT
A15A1R612	321–5025–00	B041400		RES,FXD:THICK FILM,3.92K OHM,1%,0.125W,TC=100 PPM	50139	BCK3921FT
A15A1R613	321–5010–00			RES,FXD:THICK FILM;221 OHM,1%,0.125W,TC=100 PPM	50139	BCK221FT
A15A1R614	321–5006–00			RES,FXD:THICK FILM;100 OHM,1%,0.125W,TC=100 PPM	50139	BCK1000FT
A15A1R615	321–5019–00			RES,FXD:THICK FILM;1.21K OHM,1%,0.125W,TC=100 PPM	50139	BCK1211FT
A15A1R616	321–5018–00			RES,FXD:THICK FILM;1.0K OHM,1%,0.125W,TC=100 PPM	50139	BCK1001FT
A15A1R617	321–5025–00			RES,FXD:THICK FILM;3.92K OHM,1%,0.125W,TC=100 PPM	50139	BCK3921FT
A15A1R618	321–5010–00			RES,FXD:THICK FILM;221 OHM,1%,0.125W,TC=100 PPM	50139	BCK221FT
A15A1R620	321–5047–00			RES,FXD:THICK FILM;100K OHM,1%,0.125W,TC=100 PPM	50139	BCK1003FT
A15A1R630	321–5043–00			RES,FXD:THICK FILM;47.5 OHM,1%,0.125W,TC=100 PPM	57668	MCR18FWEA47E5
A15A1R631	321–5020–00			RES,FXD:THICK FILM;1.5K OHM,1%,0.125W,TC=100 PPM	50139	BCK1501FT
A15A1R632	321–5043–00			RES,FXD:THICK FILM;47.5 OHM,1%,0.125W,TC=100 PPM	57668	MCR18FWEA47E5
A15A1R633	321–5040–00			RES,FXD:THICK FILM;68.1K OHM,1%,0.125W,TC=100 PPM	50139	BCK6812FT
A15A1R634	321–5030–00			RES,FXD:THICK FILM;10.0K OHM,1%,0.125W,TC=100 PPM	50139	BCK1002FT
A15A1R635	321–5049–00			RES,FXD:THICK FILM;1M OHM,1%,0.125W,TC=100 PPM	57668	MCR18FXEA1M
A15A1R636	321–5036–00			RES,FXD:THICK FILM;33.2K OHM,1%,0.125W,TC=100 PPM	50139	BCK3322FT
A15A1R637	321–5016–00			RES,FXD:THICK FILM;681 OHM,1%,0.125W,TC=100 PPM	50139	BCK6810FT
A15A1R638	321–5043–00			RES,FXD:THICK FILM;47.5 OHM,1%,0.125W,TC=100 PPM	57668	MCR18FWEA47E5
A15A1R639	311–2234–00			RES,VAR,TRMR:CERMET;5K OHM,20%,0.5W,0.197 SQ,TOP ADJUST	TK2073	GF06UT2 502 M L
A15A1R650	321–5043–00			RES,FXD:THICK FILM;47.5 OHM,1%,0.125W,TC=100 PPM	57668	MCR18FWEA47E5
A15A1R651	321–5043–00			RES,FXD:THICK FILM;47.5 OHM,1%,0.125W,TC=100 PPM	57668	MCR18FWEA47E5
A15A1R652	321–5047–00		B031299	RES,FXD:THICK FILM;100K OHM,1%,0.125W,TC=100 PPM	50139	BCK1003FT
A15A1R652	321–5030–00	B031300		RES,FXD:THICK FILM,10.0K OHM,1%,0.125W,TC=100 PPM,1206,T&R	50139	BCK1002FT
A15A1R660	321–5000–00			RES,FXD:THICK FILM;10 OHM,1%,0.125W,TC=100 PPM	59124	RK73H2B10R0FT
A15A1R661	321–5018–00			RES,FXD:THICK FILM;1.0K OHM,1%,0.125W,TC=100 PPM	50139	BCK1001FT
A15A1R663	321–5018–00			RES,FXD:THICK FILM;1.0K OHM,1%,0.125W,TC=100 PPM	50139	BCK1001FT
A15A1R664	321–5034–00			RES,FXD:THICK FILM;22.1K OHM,1%,0.125W,TC=100 PPM	50139	BCK2212FT
A15A1R666	321–5037–00		B031108	RES,FXD:THICK FILM;39.2K OHM,1%,0.125W,TC=100 PPM	50139	BCK3922FT
A15A1R666	321–5031–00	B031109	B031299	RES,FXD:THICK FILM;12.1K OHM,1%,0.125W	50139	BCK3922FT
A15A1R666	321–5034–00	B031300		RES,FXD:THICK FILM,22.1K OHM,1%,0.125W,TC=100 PPM,1206,T&R	50139	BCK2212FT
A15A1R667	321–5028–00			RES,FXD:THICK FILM;6.81K OHM,1%,0.125W,TC=100 PPM	50139	BCK6811FT
A15A1R668	321–5017–00	B031300		RES,FXD:THICK FILM,825 OHM,1%,0.125W,TC=100 PPM,1206,T&R	50139	BCK8250FT
A15A1R669	311–2231–00	B031300		RES,VAR,TRMR:CERMET,1K OHM,20%,0.5W,0.197 SQ,TOP ADJUST	TK2073	GF06UT2 102 M L20

Replaceable Electrical Parts List (Cont.)

Component Number	Tektronix Part Number	Serial No. Effective	Serial No. Discont'd	Name & Description	Mfr. Code	Mfr. Part Number
A15A1R670	321–5030–00			RES,FXD:THICK FILM;10.0K OHM,1%,0.125W,TC=100 PPM	50139	BCK1002FT
A15A1R671	321–5034–00			RES,FXD:THICK FILM;22.1K OHM,1%,0.125W,TC=100 PPM	50139	BCK2212FT
A15A1R672	321–5000–00			RES,FXD:THICK FILM;10 OHM,1%,0.125W,TC=100 PPM	59124	RK73H2B10R0FT
A15A1R680	311–2236–00			RES,VAR,TRMR:CERMET;20K OHM,20%,0.5W,0.197 SQ,SIDE ADJUST	TK2073	GF06UT2 203 M L
A15A1R681	321–5034–00			RES,FXD:THICK FILM;22.1K OHM,1%,0.125W,TC=100 PPM	50139	BCK2212FT
A15A1R682	321–5047–00			RES,FXD:THICK FILM;100K OHM,1%,0.125W,TC=100 PPM	50139	BCK1003FT
A15A1R683	321–5030–00			RES,FXD:THICK FILM;10.0K OHM,1%,0.125W,TC=100 PPM	50139	BCK1002FT
A15A1R684	321–5034–00			RES,FXD:THICK FILM;22.1K OHM,1%,0.125W,TC=100 PPM	50139	BCK2212FT
A15A1R686	321–5031–00			RES,FXD:THICK FILM;12.1K OHM,1%,0.125W,TC=100 PPM	50139	BCK1212FT
A15A1R687	321–5024–00			RES,FXD:THICK FILM;3.32K OHM,1%,0.125W,TC=100 PPM	50139	BCK3321FT
A15A1R688	321–5010–00			RES,FXD:THICK FILM;221 OHM,1%,0.125W,TC=100 PPM	50139	BCK221FT
A15A1R689	321–5030–00			RES,FXD:THICK FILM;10.0K OHM,1%,0.125W,TC=100 PPM	50139	BCK1002FT
A15A1R690	321–5013–00			RES,FXD:THICK FILM;392 OHM,1%,0.125W,TC=100 PPM	50139	BCK3920FT
A15A1R691	321–5018–00			RES,FXD:THICK FILM;1.0K OHM,1%,0.125W,TC=100 PPM	50139	BCK1001FT
A15A1R693	321–5027–00		B031108	RES,FXD:THICK FILM;5.62K OHM,1%,0.125W,TC=100 PPM	50139	BCK5621FT
A15A1R693	321–5145–00	B031109	B031299	RES,FXD:THICK FILM;3.32K OHM,1%,0.125W	50139	BCK5621FT
A15A1R693	321–5030–00	B031300		RES,FXD:THICK FILM,10.0K OHM,1%,0.125W,TC=100 PPM,1206,T&R	50139	BCK1002FT
A15A1R694	321–5037–00			RES,FXD:THICK FILM;39.2K OHM,1%,0.125W,TC=100 PPM	50139	BCK3922FT
A15A1R695	321–5047–00			RES,FXD:THICK FILM;100K OHM,1%,0.125W,TC=100 PPM	50139	BCK1003FT
A15A1R696	321–5047–00			RES,FXD:THICK FILM;100K OHM,1%,0.125W,TC=100 PPM	50139	BCK1003FT
A15A1R697	321–5047–00			RES,FXD:THICK FILM;100K OHM,1%,0.125W,TC=100 PPM	50139	BCK1003FT
A15A1R698	321–5047–00			RES,FXD:THICK FILM;100K OHM,1%,0.125W,TC=100 PPM	50139	BCK1003FT
A15A1R699	321–5047–00			RES,FXD:THICK FILM;100K OHM,1%,0.125W,TC=100 PPM	50139	BCK1003FT
A15A1R700	321–5044–00			RES,FXD:THICK FILM;56.2 OHM,1%,0.125W,TC=100 PPM	50139	BCD56R2FT
A15A1R701	321–5034–00		B031399	RES,FXD:THICK FILM;22.1K OHM,1%,0.125W,TC=100 PPM	50139	BCK2212FT
A15A1R701	321–5031–00	B041400		RES,FXD:THICK FILM,12.1K OHM,1%,0.125W,TC=100 PPM	50139	BCK1212FT
A15A1R702	321–5024–00			RES,FXD:THICK FILM;3.32K OHM,1%,0.125W,TC=100 PPM	50139	BCK3321FT
A15A1R703	311–1235–00			RES,VAR,NONWW:100K OHM,0.5W	32997	3386F–1–104
A15A1R704	311–1235–00			RES,VAR,NONWW:100K OHM,0.5W	32997	3386F–1–104
A15A1R705	311–1235–00			RES,VAR,NONWW:100K OHM,0.5W	32997	3386F–1–104
A15A1R706	321–5037–00		B031399	RES,FXD:THICK FILM;39.2K OHM,1%,0.125W,TC=100 PPM	50139	BCK3922FT
A15A1R706	321–5035–00	B041400		RES,FXD:THICK FILM,27.4K OHM,1%,0.125W,TC=100 PPM	50139	BCK2742FT
A15A1R707	321–5018–00			RES,FXD:THICK FILM;1.0K OHM,1%,0.125W,TC=100 PPM	50139	BCK1001FT
A15A1R709	321–5022–00			RES,FXD:THICK FILM;2.21K OHM,1%,0.125W,TC=100 PPM	50139	BCK2211FT
A15A1R710	321–5014–00			RES,FXD:THICK FILM;475 OHM,1%,0.125W,TC=100 PPM	50139	BCK4750FT
A15A1R711	321–5028–00			RES,FXD:THICK FILM;6.81K OHM,1%,0.125W,TC=100 PPM	50139	BCK6811FT
A15A1R712	321–5006–00			RES,FXD:THICK FILM;100 OHM,1%,0.125W,TC=100 PPM	50139	BCK1000FT
A15A1R713	321–5006–00			RES,FXD:THICK FILM;100 OHM,1%,0.125W,TC=100 PPM	50139	BCK1000FT
A15A1R714	321–5018–00			RES,FXD:THICK FILM;1.0K OHM,1%,0.125W,TC=100 PPM	50139	BCK1001FT
A15A1R720	321–5041–00			RES,FXD:THICK FILM;82.5K OHM,1%,0.125W,TC=100 PPM	50139	BCK8252FT

Replaceable Electrical Parts List (Cont.)

Component Number	Tektronix Part Number	Serial No. Effective	Serial No. Discont'd	Name & Description	Mfr. Code	Mfr. Part Number
A15A1R721	321–5047–00			RES,FXD:THICK FILM;100K OHM,1%,0.125W,TC=100 PPM	50139	BCK1003FT
A15A1R722	321–5030–00			RES,FXD:THICK FILM;10.0K OHM,1%,0.125W,TC=100 PPM	50139	BCK1002FT
A15A1R723	321–5030–00			RES,FXD:THICK FILM;10.0K OHM,1%,0.125W,TC=100 PPM	50139	BCK1002FT
A15A1R730	321–5032–00			RES,FXD:THICK FILM;15.0K OHM,1%,0.125W,TC=100 PPM	50139	BCK1502FT
A15A1R731	321–5032–00			RES,FXD:THICK FILM;15.0K OHM,1%,0.125W,TC=100 PPM	50139	BCK1502FT
A15A1R732	321–5030–00			RES,FXD:THICK FILM;10.0K OHM,1%,0.125W,TC=100 PPM	50139	BCK1002FT
A15A1R733	321–5030–00			RES,FXD:THICK FILM;10.0K OHM,1%,0.125W,TC=100 PPM	50139	BCK1002FT
A15A1R741	321–5018–00			RES,FXD:THICK FILM;1.0K OHM,1%,0.125W,TC=100 PPM	50139	BCK1001FT
A15A1R750	321–5047–00			RES,FXD:THICK FILM;100K OHM,1%,0.125W,TC=100 PPM	50139	BCK1003FT
A15A1R752	321–5018–00			RES,FXD:THICK FILM;1.0K OHM,1%,0.125W,TC=100 PPM	50139	BCK1001FT
A15A1R754	321–5047–00			RES,FXD:THICK FILM;100K OHM,1%,0.125W,TC=100 PPM	50139	BCK1003FT
A15A1R761	321–5030–00		B031108	RES,FXD:THICK FILM;10.0K OHM,1%,0.125W,TC=100 PPM	50139	BCK1002FT
A15A1R761	321–5024–00	B031109	B031299	RES,FXD:THICK FILM,3.32K OHM,1%,0.125W,TC=100 PPM,1206,T&R	50139	BCK4751FT
A15A1R761	321–5026–00	B031300		RES,FXD:THICK FILM,4.75K OHM,1%,0.125W,TC=100 PPM,1206,T&R	50139	BCK4751FT
A15A1R762	321–5030–00			RES,FXD:THICK FILM;10.0K OHM,1%,0.125W,TC=100 PPM	50139	BCK1002FT
A15A1R763	321–5026–00			RES,FXD:THICK FILM;4.75K OHM,1%,0.125W,TC=100 PPM	50139	BCK4751FT
A15A1R770	321–5018–00			RES,FXD:THICK FILM;1.0K OHM,1%,0.125W,TC=100 PPM	50139	BCK1001FT
A15A1R771	321–5018–00			RES,FXD:THICK FILM;1.0K OHM,1%,0.125W,TC=100 PPM	50139	BCK1001FT
A15A1R772	321–5000–00			RES,FXD:THICK FILM;10 OHM,1%,0.125W,TC=100 PPM	59124	RK73H2B10R0FT
A15A1R780	321–5032–00			RES,FXD:THICK FILM;15.0K OHM,1%,0.125W,TC=100 PPM	50139	BCK1502FT
A15A1R781	321–5030–00			RES,FXD:THICK FILM;10.0K OHM,1%,0.125W,TC=100 PPM	50139	BCK1002FT
A15A1R782	321–5019–00			RES,FXD:THICK FILM;1.21K OHM,1%,0.125W,TC=100 PPM	50139	BCK1211FT
A15A1R790	321–5024–00			RES,FXD:THICK FILM;3.32K OHM,1%,0.125W,TC=100 PPM	50139	BCK3321FT
A15A1R791	321–5028–00			RES,FXD:THICK FILM;6.81K OHM,1%,0.125W,TC=100 PPM	50139	BCK6811FT
A15A1R800	321–5025–00			RES,FXD:THICK FILM;3.92K OHM,1%,0.125W,TC=100 PPM	50139	BCK3921FT
A15A1R801	321–5025–00			RES,FXD:THICK FILM;3.92K OHM,1%,0.125W,TC=100 PPM	50139	BCK3921FT
A15A1R802	321–5020–00			RES,FXD:THICK FILM;1.5K OHM,1%,0.125W,TC=100 PPM	50139	BCK1501FT
A15A1R803	321–5020–00			RES,FXD:THICK FILM;1.5K OHM,1%,0.125W,TC=100 PPM	50139	BCK1501FT
A15A1R804	321–5020–00			RES,FXD:THICK FILM;1.5K OHM,1%,0.125W,TC=100 PPM	50139	BCK1501FT
A15A1R805	321–5020–00			RES,FXD:THICK FILM;1.5K OHM,1%,0.125W,TC=100 PPM	50139	BCK1501FT
A15A1R806	321–5020–00			RES,FXD:THICK FILM;1.5K OHM,1%,0.125W,TC=100 PPM	50139	BCK1501FT
A15A1R807	321–5010–00			RES,FXD:THICK FILM;221 OHM,1%,0.125W,TC=100 PPM	50139	BCK221FT
A15A1R808	321–5006–00			RES,FXD:THICK FILM;100 OHM,1%,0.125W,TC=100 PPM	50139	BCK1000FT
A15A1R809	321–5010–00			RES,FXD:THICK FILM;221 OHM,1%,0.125W,TC=100 PPM	50139	BCK221FT
A15A1R810	321–5004–00			RES,FXD:THICK FILM;22.1 OHM,1%,0.125W,TC=100 PPM	57668	MCR18FWEA22E1
A15A1R811	321–5004–00			RES,FXD:THICK FILM;22.1 OHM,1%,0.125W,TC=100 PPM	57668	MCR18FWEA22E1
A15A1R812	321–5020–00			RES,FXD:THICK FILM;1.5K OHM,1%,0.125W,TC=100 PPM	50139	BCK1501FT
A15A1R813	321–5020–00			RES,FXD:THICK FILM;1.5K OHM,1%,0.125W,TC=100 PPM	50139	BCK1501FT
A15A1R814	321–5020–00			RES,FXD:THICK FILM;1.5K OHM,1%,0.125W,TC=100 PPM	50139	BCK1501FT

Replaceable Electrical Parts List (Cont.)

Component Number	Tektronix Part Number	Serial No. Effective	Serial No. Discont'd	Name & Description	Mfr. Code	Mfr. Part Number
A15A1R815	321–5020–00			RES,FXD:THICK FILM;1.5K OHM,1%,0.125W,TC=100 PPM	50139	BCK1501FT
A15A1R816	321–5020–00			RES,FXD:THICK FILM;1.5K OHM,1%,0.125W,TC=100 PPM	50139	BCK1501FT
A15A1R817	321–5011–00			RES,FXD:THICK FILM;274 OHM,1%,0.125W,TC=100 PPM	50139	BCK2740FT
A15A1R818	321–5025–00			RES,FXD:THICK FILM;3.92K OHM,1%,0.125W,TC=100 PPM	50139	BCK3921FT
A15A1R819	321–5006–00			RES,FXD:THICK FILM;100 OHM,1%,0.125W,TC=100 PPM	50139	BCK1000FT
A15A1R820	321–5038–00			RES,FXD:THICK FILM;47.5K OHM,1%,0.125W,TC=100 PPM	50139	BCK4752FT
A15A1R821	321–5006–00			RES,FXD:THICK FILM;100 OHM,1%,0.125W,TC=100 PPM	50139	BCK1000FT
A15A1R822	321–5006–00			RES,FXD:THICK FILM;100 OHM,1%,0.125W,TC=100 PPM	50139	BCK1000FT
A15A1R823	321–5038–00			RES,FXD:THICK FILM;47.5K OHM,1%,0.125W,TC=100 PPM	50139	BCK4752FT
A15A1R824	321–5012–00			RES,FXD:THICK FILM;332 OHM,1%,0.125W,TC=100 PPM	50139	BCK3320FT
A15A1R825	321–5012–00			RES,FXD:THICK FILM;332 OHM,1%,0.125W,TC=100 PPM	50139	BCK3320FT
A15A1R826	321–5012–00			RES,FXD:THICK FILM;332 OHM,1%,0.125W,TC=100 PPM	50139	BCK3320FT
A15A1R828	321–5051–00	B031300	B031399	RES,FXD:THICK FILM,0 OHM,1%,0.125W,TC=100 PPM	09969	CRCW1206 JUMPER
A15A1R828	321–5048–00	B041400		RES,FXD:THICK FILM,332K OHM,1%,0.125W,TC=100 PPM	50139	BCK3323FT
A15A1R830	321–5012–00			RES,FXD:THICK FILM;332 OHM,1%,0.125W,TC=100 PPM	50139	BCK3320FT
A15A1R831	321–5012–00			RES,FXD:THICK FILM;332 OHM,1%,0.125W,TC=100 PPM	50139	BCK3320FT
A15A1R832	321–5004–00			RES,FXD:THICK FILM;22.1 OHM,1%,0.125W,TC=100 PPM	57668	MCR18FWEA22E1
A15A1R833	321–5038–00			RES,FXD:THICK FILM;47.5K OHM,1%,0.125W,TC=100 PPM	50139	BCK4752FT
A15A1R834	321–5012–00			RES,FXD:THICK FILM;332 OHM,1%,0.125W,TC=100 PPM	50139	BCK3320FT
A15A1R835	321–5012–00			RES,FXD:THICK FILM;332 OHM,1%,0.125W,TC=100 PPM	50139	BCK3320FT
A15A1R836	321–5012–00			RES,FXD:THICK FILM;332 OHM,1%,0.125W,TC=100 PPM	50139	BCK3320FT
A15A1R837	321–5012–00			RES,FXD:THICK FILM;332 OHM,1%,0.125W,TC=100 PPM	50139	BCK3320FT
A15A1R838	321–5012–00			RES,FXD:THICK FILM;332 OHM,1%,0.125W,TC=100 PPM	50139	BCK3320FT
A15A1R839	321–5004–00			RES,FXD:THICK FILM;22.1 OHM,1%,0.125W,TC=100 PPM	57668	MCR18FWEA22E1
A15A1R870	321–5030–00			RES,FXD:THICK FILM;10.0K OHM,1%,0.125W,TC=100 PPM	50139	BCK1002FT
A15A1R871	321–5030–00			RES,FXD:THICK FILM;10.0K OHM,1%,0.125W,TC=100 PPM	50139	BCK1002FT
A15A1R872	321–5026–00			RES,FXD:THICK FILM;4.75K OHM,1%,0.125W,TC=100 PPM	50139	BCK4751FT
A15A1R873	321–5030–00			RES,FXD:THICK FILM;10.0K OHM,1%,0.125W,TC=100 PPM	50139	BCK1002FT
A15A1R874	321–5030–00			RES,FXD:THICK FILM;10.0K OHM,1%,0.125W,TC=100 PPM	50139	BCK1002FT
A15A1R875	321–5030–00			RES,FXD:THICK FILM;10.0K OHM,1%,0.125W,TC=100 PPM	50139	BCK1002FT
A15A1R880	321–5000–00			RES,FXD:THICK FILM;10 OHM,1%,0.125W,TC=100 PPM	59124	RK73H2B10R0FT
A15A1R881	321–5000–00			RES,FXD:THICK FILM;10 OHM,1%,0.125W,TC=100 PPM	59124	RK73H2B10R0FT
A15A1R882	321–5000–00			RES,FXD:THICK FILM;10 OHM,1%,0.125W,TC=100 PPM	59124	RK73H2B10R0FT
A15A1R883	321–5000–00			RES,FXD:THICK FILM;10 OHM,1%,0.125W,TC=100 PPM	59124	RK73H2B10R0FT
A15A1R884	321–5000–00			RES,FXD:THICK FILM;10 OHM,1%,0.125W,TC=100 PPM	59124	RK73H2B10R0FT
A15A1R900	311–1225–00			RES,VAR,NONWW:TRMR,1K OHM,0.5W	32997	3386F–1–102
A15A1R901	321–5013–00			RES,FXD:THICK FILM;392 OHM,1%,0.125W,TC=100 PPM	50139	BCK3920FT
A15A1R902	321–5025–00			RES,FXD:THICK FILM;3.92K OHM,1%,0.125W,TC=100 PPM	50139	BCK3921FT
A15A1R903	321–5009–00			RES,FXD:THICK FILM;182 OHM,1%,0.125W,TC=100 PPM	50139	BCK1820FT

Replaceable Electrical Parts List (Cont.)

Component Number	Tektronix Part Number	Serial No. Effective	Serial No. Discont'd	Name & Description	Mfr. Code	Mfr. Part Number
A15A1R904	321–5009–00			RES,FXD:THICK FILM;182 OHM,1%,0.125W,TC=100 PPM	50139	BCK1820FT
A15A1R905	321–5018–00			RES,FXD:THICK FILM;1.0K OHM,1%,0.125W,TC=100 PPM	50139	BCK1001FT
A15A1R906	321–5030–00			RES,FXD:THICK FILM;10.0K OHM,1%,0.125W,TC=100 PPM	50139	BCK1002FT
A15A1R907	321–5030–00			RES,FXD:THICK FILM;10.0K OHM,1%,0.125W,TC=100 PPM	50139	BCK1002FT
A15A1R908	321–5023–00			RES,FXD:THICK FILM;2.74K OHM,1%,0.125W,TC=100 PPM	50139	BCK2741FT
A15A1R909	321–5023–00			RES,FXD:THICK FILM;2.74K OHM,1%,0.125W,TC=100 PPM	50139	BCK2741FT
A15A1R910	311–1225–00			RES,VAR,NONWW:TRMR,1K OHM,0.5W	32997	3386F–1–102
A15A1R911	321–5020–00			RES,FXD:THICK FILM;1.5K OHM,1%,0.125W,TC=100 PPM	50139	BCK1501FT
A15A1R912	321–5025–00			RES,FXD:THICK FILM;3.92K OHM,1%,0.125W,TC=100 PPM	50139	BCK3921FT
A15A1R913	321–5035–00		B031399	RES,FXD:THICK FILM;27.4K OHM,1%,0.125W,TC=100 PPM	50139	BCK2742FT
A15A1R913	321–5033–00	B041400		RES,FXD:THICK FILM,18.2K OHM,1%,0.125W,TC=100 PPM	50139	BCK1822FT
A15A1R914	321–5020–00			RES,FXD:THICK FILM;1.5K OHM,1%,0.125W,TC=100 PPM	50139	BCK1501FT
A15A1R915	321–5009–00			RES,FXD:THICK FILM;182 OHM,1%,0.125W,TC=100 PPM	50139	BCK1820FT
A15A1R916	321–5020–00			RES,FXD:THICK FILM;1.5K OHM,1%,0.125W,TC=100 PPM	50139	BCK1501FT
A15A1R917	321–5017–00			RES,FXD:THICK FILM;825 OHM,1%,0.125W,TC=100 PPM	50139	BCK8250FT
A15A1R918	321–5023–00			RES,FXD:THICK FILM;2.74K OHM,1%,0.125W,TC=100 PPM	50139	BCK2741FT
A15A1R919	321–5033–00			RES,FXD:THICK FILM;18.2K OHM,1%,0.125W,TC=100 PPM	50139	BCK1822FT
A15A1R920	321–5025–00			RES,FXD:THICK FILM;3.92K OHM,1%,0.125W,TC=100 PPM	50139	BCK3921FT
A15A1R921	321–5004–00			RES,FXD:THICK FILM;22.1 OHM,1%,0.125W,TC=100 PPM	57668	MCR18FWEA22E1
A15A1R922	321–5045–00			RES,FXD:THICK FILM;68.1 OHM,1%,0.125W,TC=100 PPM	50139	BCD68R1FT
A15A1R923	321–5004–00			RES,FXD:THICK FILM;22.1 OHM,1%,0.125W,TC=100 PPM	57668	MCR18FWEA22E1
A15A1R924	321–5013–00			RES,FXD:THICK FILM;392 OHM,1%,0.125W,TC=100 PPM	50139	BCK3920FT
A15A1R925	321–5045–00			RES,FXD:THICK FILM;68.1 OHM,1%,0.125W,TC=100 PPM	50139	BCD68R1FT
A15A1R926	321–5045–00			RES,FXD:THICK FILM;68.1 OHM,1%,0.125W,TC=100 PPM	50139	BCD68R1FT
A15A1R927	321–5007–00			RES,FXD:THICK FILM;121 OHM,1%,0.125W,TC=100 PPM	50139	BCK1210FT
A15A1R933	321–5006–00			RES,FXD:THICK FILM;100 OHM,1%,0.125W,TC=100 PPM	50139	BCK1000FT
A15A1R934	321–5032–00			RES,FXD:THICK FILM;15.0K OHM,1%,0.125W,TC=100 PPM	50139	BCK1502FT
A15A1R937	311–1223–00			RES,VAR,NONWW:TRMR,250 OHM,0.5W	32997	3386F–1–251
A15A1R938	321–5012–00			RES,FXD:THICK FILM;332 OHM,1%,0.125W,TC=100 PPM	50139	BCK3320FT
A15A1R939	321–5017–00			RES,FXD:THICK FILM;825 OHM,1%,0.125W,TC=100 PPM	50139	BCK8250FT
A15A1R940	321–5006–00			RES,FXD:THICK FILM;100 OHM,1%,0.125W,TC=100 PPM	50139	BCK1000FT
A15A1R941	321–5011–00			RES,FXD:THICK FILM;274 OHM,1%,0.125W,TC=100 PPM	50139	BCK2740FT
A15A1R942	321–5006–00			RES,FXD:THICK FILM;100 OHM,1%,0.125W,TC=100 PPM	50139	BCK1000FT
A15A1R943	321–5010–00			RES,FXD:THICK FILM;221 OHM,1%,0.125W,TC=100 PPM	50139	BCK221FT
A15A1R944	321–5027–00			RES,FXD:THICK FILM;5.62K OHM,1%,0.125W,TC=100 PPM	50139	BCK5621FT
A15A1R945	321–5018–00			RES,FXD:THICK FILM;1.0K OHM,1%,0.125W,TC=100 PPM	50139	BCK1001FT
A15A1R947	321–5010–00	B041400		RES,FXD:THICK FILM,221 OHM,1%,0.125W,TC=100 PPM	50139	BCK221FT
A15A1RT130	307–0863–00			RES,THERMAL:10 OHM,10%,NTC	15454	SG13–S
A15A1SW140	260–1849–00			SWITCH,PWR:DPDT;PUSH PUSH ALT ACT,PC PINS,6A 250VAC/1A 100VDC,36A AC SURGE,RIGHT ANG MNT	31918	130222 (NE18–00

Replaceable Electrical Parts List (Cont.)

Component Number	Tektronix Part Number	Serial No. Effective	Serial No. Discont'd	Name & Description	Mfr. Code	Mfr. Part Number
A15A1T110	120–1401–00			TRANSFORMER,PWR:LINE TRIGGER;1:1,PRI L>0.6H, SEC RDC=75 25%	54937	DMI 500–2044
A15A1T160	120–1880–00			TRANSFORMER,RF:COMMON MODE,10MH,DCR 0.18 OH M,I MAX 3A AC,VERTICAL MOUNT,1.26 X 0.91 X 1.4 HIGH,UL REC, ,	TK2058	TF3233S–103Y3R0
A15A1T190	120–1776–00			TRANSFORMER,RF:ENERGY STORAGE POT CORE2710S AFETY CONTROLLED	75498	128–7050–00
A15A1T230	120–1890–00			TRANSFORMER,PWR:SWITCHING,24–28KHZ,IN 120V OUT 3KV .3MA,12KV 10UA,115V.1A,50V .1A,20V.25A,10V 3.2A,10.5 2.2A,,	75498	129–0135–00
A15A1U260	156–1627–00		B031109	IC,LINEAR:BIPOLAR,SW–REGULATOR CONTROLLER; PWM,PUSH–PULL OUTPUTS	01295	TL594CN
A15A1U260	156–4661–00	B031109		IC,LINEAR:BIPOLAR,SW–REGULATOR CONTROLLER;PWM,PUSH–PULL OUTPUTS	04713	TL594CN
A15A1U280	156–1627–00		B031108	IC,LINEAR:BIPOLAR,SW–REGULATOR CONTROLLER; PWM,PUSH–PULL OUTPUTS	01295	TL594CN
A15A1U280	156–4661–00	B031109		IC,LINEAR:BIPOLAR,SW–REGULATOR CONTROLLER;PWM,PUSH–PULL OUTPUTS	04713	TL594CN
A15A1U281	156–0885–00			IC, OPTOCOUPLER:7.5KV ISOL, VCEO 70V, I COLL 100MA, HFE 400; 6 PIN DIP	04713	CNY17–1
A15A1U630	156–5018–00			IC,LINEAR:BIPOLAR,OP–AMP;DUAL,SINGLESUPPLY	01295	LM358D
A15A1U670	156–5074–00			IC,DIGITAL:HCMOS,FLIP FLOP;DUAL D–TYPE	01295	SN74HC74D
A15A1U730	156–5032–00			IC,DIGITAL:LSTTL,GATES;QUAD 2–INPUT NOR	01295	SN74LS02D
A15A1U780	156–5123–00			IC,DIGITAL:HCTCMOS,DEMUX/DECODER;4–TO–16 DECODER	1CH66	74HCT154D
A15A1U810	156–5018–00			IC,LINEAR:BIPOLAR,OP–AMP;DUAL,SINGLESUPPLY	01295	LM358D
A15A1U830	156–5714–00			IC,LINEAR:BIPOLAR,VOLTAGE REGULATOR;POSITIVE, ADJUSTABLE,100MA,4%	27014	LM317LM
A15A1U840	156–5081–01			IC,DIGITAL:HCTCMOS,GATE;HEX INVERTER	0JR04	TC74HCT04AFN(EL
A15A1U850	156–5088–00			IC,DIGITAL:HCTCMOS,DEMUX/DECODER;3–TO–8 DECODER	01295	SN74HCT138D
A15A1U860	156–5001–00			IC,DIGITAL:LSTTL,GATES;QUAD 2–INPUT NAND	01295	SN74LS00D
A15A1U861	156–5144–00			IC,DIGITAL:HCTCMOS,FLIP FLOP;QUAD D–TYPE, CLEAR	1CH66	74HCT175D
A15A1U870	156–5121–00			IC,DIGITAL:LSTTL,MUX/ENCODER;8–TO–3 PRIORITY ENCODER	01295	SN74LS148D
A15A1U900	156–5001–00			IC,DIGITAL:LSTTL,GATES;QUAD 2–INPUT NAND	01295	SN74LS00D
A15A1U901	156–5257–00			IC,LINEAR:BIPOLAR,OP–AMP;HIGH SLEW RATE	01295	LM318D
A15A1U910	156–5257–00			IC,LINEAR:BIPOLAR,OP–AMP;HIGH SLEW RATE	01295	LM318D
A15A1U911	156–5274–01			IC,MISC:CMOS,ANALOG SWITCH;QUAD	17856	DG211DY–T1
A15A1U920	156–5299–00			IC,LINEAR:BIPOLAR,VOLTAGE REGULATOR;NEGATIVE,–5V,100MA,5%	01295	MC79L05ACD
A15A1U930	156–5070–01	B031300		IC,DIGITAL:HCTCMOS,BUFFER,OCTAL,3–STATE	01295	SN74HCT244DWR
A15A1VR150	307–0456–00			RES,V SENSITIVE:MOV; 250VRMS, 330VDC,72J, 4500A, VAR 429V, CLAMP 650V,500PF	34371	V250LA20A

Replaceable Electrical Parts List (Cont.)

Component Number	Tektronix Part Number	Serial No. Effective	Serial No. Discont'd	Name & Description	Mfr. Code	Mfr. Part Number
A15A1VR530	152–0247–00		B031299	SEMICOND DVC,DI:ZEN,SI,150V,5%,0.4W,DO–71N989B,MI	04713	SZG275K1RL
A15A1VR530	152–0470–00	B031300		DIODE,ZENER:200V,5%,0.4W,1N992B,DO–7	04713	1N992BRL
A15A1VR630	152–0247–00		B031299	SEMICOND DVC,DI:ZEN,SI,150V,5%,0.4W,DO–71N989B,MI	04713	SZG275K1RL
A15A1VR630	152–0470–00	B031300		DIODE,ZENER:200V,5%,0.4W,1N992B,DO–7	04713	1N992BRL
A15A1VR660	152–5011–00			DIODE,ZENER:,;6.2V,5%,225MW	04713	MMBZ5234BLT1
A15A1VR661	152–5011–00			DIODE,ZENER:,;6.2V,5%,225MW	04713	MMBZ5234BLT1
A15A1VR690	152–5011–00			DIODE,ZENER:,;6.2V,5%,225MW	04713	MMBZ5234BLT1
A15A1VR691	152–5011–00			DIODE,ZENER:,;6.2V,5%,225MW	04713	MMBZ5234BLT1
A15A1W1	174–2551–00			CA ASSY,SP,ELEC:RIBBON W/CRT SOCKET	80009	174255100
A15A1W2	174–0188–01			CABLE ASSY,RF:50 OHM COAX,9.0 L,RIBBONW/O TAG	TK2469	174–0188–02
A15A1W5	175–4464–00			CA ASSY,SP,ELEC:RIBBON,;IDC,20,28 AWG,2.5 L,2X10,0.1 CTR,RCPT X PCB,2ROW	TK0032	ORDER BY DESC
A15A1W13	174–0198–02			CA ASSY,SP,ELEC:10,28 AWG,5.5 L,RIBBON	TK2469	174–0198–02
A15A1W14	174–0191–01			CA ASSY,SP,ELEC:10,28 AWG,5.4 L,RIBBON	80009	174019101
A15A1W730	321–5051–00			RES,FXD:THICK FILM;0 OHM,1%,0.125W,TC=100 PPM	09969	CRCW1206
A15A1W790	321–5051–00			RES,FXD:THICK FILM;0 OHM,1%,0.125W,TC=100 PPM	09969	CRCW1206
A15A1W830	321–5051–00			RES,FXD:THICK FILM;0 OHM,1%,0.125W,TC=100 PPM	09969	CRCW1206
A15A1W831	321–5051–00			RES,FXD:THICK FILM;0 OHM,1%,0.125W,TC=100 PPM	09969	CRCW1206
A15A1W832	321–5051–00			RES,FXD:THICK FILM;0 OHM,1%,0.125W,TC=100 PPM	09969	CRCW1206
A15A1W840	321–5051–00			RES,FXD:THICK FILM;0 OHM,1%,0.125W,TC=100 PPM	09969	CRCW1206

Component No.	Tektronix Part No.	Serial/Assembly No. Effective	Dscont	Name & Description	Mfr. Code	Mfr. Part No.
A16	119-2568-04			1ST CONVERTER A:	80009	119-2568-04
A16C101	281-0825-00			CAP,FXD,CER DI:0.005UF,+100-0%,100V	33095	51-726-008
A16C102	281-0825-00			CAP,FXD,CER DI:0.005UF,+100-0%,100V	33095	51-726-008
A16C103	281-0825-00			CAP,FXD,CER DI:0.005UF,+100-0%,100V	33095	51-726-008
A16C105	290-0512-00			CAP,FXD,ELCTLT:22UF,20%,15V	05397	T368B226M015AS
A16C106	290-0536-00			CAP,FXD,ELCTLT:10UF,20%,25V TANTALUM	05397	T368B106M025AS
A16R107	313-1820-00			RES,FXD,FILM:82 OHM,5%,0.2W	57668	TR20JE 82E
A16R108	313-1470-00			RES,FXD,FILM:47 OHM,5%,0.2W	57668	TR20JE 47E
A16A1	----- -----			CIRCUIT BD ASSY:1ST CONVERTER (PART OF A16)		
A16A1C105	283-5004-00			CAP,FXD,CER DI:0.1UF,10%,25V	80009	283-5004-00
A16A1C106	283-5005-00			CAP,FXD,CER DI:4PF,+/- 0.25PF,50V	54583	C3216COG1H040C
A16A1C108	283-5005-00			CAP,FXD,CER DI:4PF,+/- 0.25PF,50V	54583	C3216COG1H040C
A16A1C112	283-5005-00			CAP,FXD,CER DI:4PF,+/- 0.25PF,50V	54583	C3216COG1H040C
A16A1C113	283-5017-00			CAP,FXD,CER DI:1PF,+/-0.25PF,50V	80009	283-5017-00
A16A1C114	283-5005-00			CAP,FXD,CER DI:4PF,+/- 0.25PF,50V	54583	C3216COG1H040C
A16A1C120	283-5004-00			CAP,FXD,CER DI:0.1UF,10%,25V	80009	283-5004-00
A16A1C202	283-5005-00			CAP,FXD,CER DI:4PF,+/- 0.25PF,50V	54583	C3216COG1H040C
A16A1C204	283-5005-00			CAP,FXD,CER DI:4PF,+/- 0.25PF,50V	54583	C3216COG1H040C
A16A1C214	283-5005-00			CAP,FXD,CER DI:4PF,+/- 0.25PF,50V	54583	C3216COG1H040C
A16A1C220	283-5004-00			CAP,FXD,CER DI:0.1UF,10%,25V	80009	283-5004-00
A16A1C222	283-5005-00			CAP,FXD,CER DI:4PF,+/- 0.25PF,50V	54583	C3216COG1H040C
A16A1C300	283-5004-00			CAP,FXD,CER DI:0.1UF,10%,25V	80009	283-5004-00
A16A1C304	283-5005-00			CAP,FXD,CER DI:4PF,+/- 0.25PF,50V	54583	C3216COG1H040C
A16A1C312	283-5005-00			CAP,FXD,CER DI:4PF,+/- 0.25PF,50V	54583	C3216COG1H040C
A16A1C322	283-5003-00			CAP,FXD,CER DI:0.01UF,10%,50V	80009	283-5003-00
A16A1C324	283-5003-00			CAP,FXD,CER DI:0.01UF,10%,50V	80009	283-5003-00
A16A1C326	283-5004-00			CAP,FXD,CER DI:0.1UF,10%,25V	80009	283-5004-00
A16A1C328	283-5004-00			CAP,FXD,CER DI:0.1UF,10%,25V	80009	283-5004-00
A16A1C330	283-5003-00			CAP,FXD,CER DI:0.01UF,10%,50V	80009	283-5003-00
A16A1CR130	152-1063-00			SEMICOND DVC,DI:SCHOTTKY,SI,STAR QUAD,450MV	80009	152-1063-00
A16A1J130	131-1803-02			CONN,RCPT,ELEC:	80009	131-1803-02

Component No.	Tektronix Part No.	Serial/Assembly No. Effective	Dscont	Name & Description	Mfr. Code	Mfr. Part No.
A16A1J300	131-4203-00			CONN,RF JACK:	80009	131-4203-00
A16A1Q204	151-0608-00			TRANSISTOR,SIG:BIPOLAR,NPN;12V,65MA,8.5GHZ, AMPLIFIER;NE64535/2SC2585,4 PIN CERAMIC X P KG	80009	151-0608-00
A16A1Q212	151-0608-00			TRANSISTOR,SIG:BIPOLAR,NPN;12V,65MA,8.5GHZ, AMPLIFIER;NE64535/2SC2585,4 PIN CERAMIC X P KG	80009	151-0608-00
A16A1Q324	151-5000-00			TRANSISTOR,SIG:BIPOLAR,PNP;40V,200MA,250MHZ ,AMPLIFIER;MMBT3906L,TO-236/SOT-23,8MM T&R	04713	MMBT3906LT1
A16A1Q326	151-5000-00			TRANSISTOR,SIG:BIPOLAR,PNP;40V,200MA,250MHZ ,AMPLIFIER;MMBT3906L,TO-236/SOT-23,8MM T&R	04713	MMBT3906LT1
A16A1Q335	151-5000-00			TRANSISTOR,SIG:BIPOLAR,PNP;40V,200MA,250MHZ ,AMPLIFIER;MMBT3906L,TO-236/SOT-23,8MM T&R	04713	MMBT3906LT1
A16A1Q338	151-5005-00			TRANSISTOR,SIG:BIPOLAR,PNP;20V,1.0A,60MHZ,A MPLIFIER;BCX69/BC869,SOT-89,12MM T/R	04713	BCX69T1
A16A1R102	321-5006-00			RES,FXD:METAL FILM;100 OHM,1%,0.125W,TC=100 PPM;1206,T&R	80009	321-5006-00
A16A1R104	321-5006-00			RES,FXD:METAL FILM;100 OHM,1%,0.125W,TC=100 PPM;1206,T&R	80009	321-5006-00
A16A1R106	321-5043-00			RES,FXD:METAL FILM;47.5 OHM,1%,0.125W,TC=10 0 PPM;1206,T&R	80009	321-5043-00
A16A1R113	321-5044-00			RES,FXD:METAL FILM;56.2 OHM,1%,0.125W,TC=10 0 PPM;1206,T&R	01121	BCD56R2FT
A16A1R114	321-5043-00			RES,FXD:METAL FILM;47.5 OHM,1%,0.125W,TC=10 0 PPM;1206,T&R	80009	321-5043-00
A16A1R204	321-5043-00			RES,FXD:METAL FILM;47.5 OHM,1%,0.125W,TC=10 0 PPM;1206,T&R	80009	321-5043-00
A16A1R214	321-5043-00			RES,FXD:METAL FILM;47.5 OHM,1%,0.125W,TC=10 0 PPM;1206,T&R	80009	321-5043-00
A16A1R224	321-5033-00			RES,FXD:METAL FILM;18.2K OHM,1%,0.125W,TC=1 00 PPM;1206,T&R	80009	321-5033-00
A16A1R234	321-5026-00			RES,FXD:METAL FILM;4.75K OHM,1%,0.125W,TC=1 00 PPM;1206,T&R	80009	321-5026-00
A16A1R236	321-5030-00			RES,FXD:METAL FILM;10.0K OHM,1%,0.125W,TC=1 00 PPM;1206,T&R	80009	321-5030-00
A16A1R314	321-5006-00			RES,FXD:METAL FILM;100 OHM,1%,0.125W,TC=100 PPM;1206,T&R	80009	321-5006-00
A16A1R315	321-5006-00			RES,FXD:METAL FILM;100 OHM,1%,0.125W,TC=100 PPM;1206,T&R	80009	321-5006-00
A16A1R322	321-5009-00			RES,FXD:METAL FILM;182 OHM,1%,0.125W,TC=100 PPM;1206,T&R	80009	321-5009-00
A16A1R324	321-5040-00			RES,FXD:METAL FILM;68.1K OHM,1%,0.125W,TC=1 00 PPM;1206,T&R	80009	321-5040-00
A16A1R325	321-5040-00			RES,FXD:METAL FILM;68.1K OHM,1%,0.125W,TC=1 00 PPM;1206,T&R	80009	321-5040-00
A16A1R326	321-5009-00			RES,FXD:METAL FILM;182 OHM,1%,0.125W,TC=100 PPM;1206,T&R	80009	321-5009-00
A16A1R328	321-5033-00			RES,FXD:METAL FILM;18.2K OHM,1%,0.125W,TC=1 00 PPM;1206,T&R	80009	321-5033-00
A16A1R330	321-5030-00			RES,FXD:METAL FILM;10.0K OHM,1%,0.125W,TC=1 00 PPM;1206,T&R	80009	321-5030-00
A16A1R332	321-5028-00			RES,FXD:METAL FILM;6.81K OHM,1%,0.125W,TC=1 00 PPM;1206,T&R	80009	321-5028-00
A16A1R334	321-5014-00			RES,FXD:METAL FILM;475 OHM,1%,0.125W,TC=100 PPM;1206,T&R	80009	321-5014-00
A16A1R335	321-5043-00			RES,FXD:METAL FILM;47.5 OHM,1%,0.125W,TC=10 0 PPM;1206,T&R	80009	321-5043-00
A16A1R336	321-5043-00			RES,FXD:METAL FILM;47.5 OHM,1%,0.125W,TC=10 0 PPM;1206,T&R	80009	321-5043-00

Component No.	Tektronix Part No.	Serial/Assembly No. Effective	Dscont	Name & Description	Mfr. Code	Mfr. Part No.
A16A1R338	321-5000-00			RES,FXD:METAL FILM;10 OHM,1%,0.125W,TC=100 PPM;1206,T&R	57668	MCR18EZHFW10E
A16A1U230	156-5017-01			IC,LINEAR:BIPOLAR,OP-AMP;DUAL;MC1458D,S08.1 50,12MM T/R	80009	156-5017-01
A16A2	----- -----			CIRCUIT BD ASSY: 1ST MIXER INPUT (PART OF A16)		
A16A2C151	283-5004-00			CAP,FXD,CER DI:0.1UF,10%,25V	80009	283-5004-00
A16A2C201	281-0825-00			CAP,FXD,CER DI:0.005UF,+100-0%,100V	33095	51-726-008
A16A2C202	281-0825-00			CAP,FXD,CER DI:0.005UF,+100-0%,100V	33095	51-726-008
A16A2C240	283-5004-00			CAP,FXD,CER DI:0.1UF,10%,25V	80009	283-5004-00
A16A2C241	283-5004-00			CAP,FXD,CER DI:0.1UF,10%,25V	80009	283-5004-00
A16A2C242	283-5004-00			CAP,FXD,CER DI:0.1UF,10%,25V	80009	283-5004-00
A16A2C258	283-5004-00			CAP,FXD,CER DI:0.1UF,10%,25V	80009	283-5004-00
A16A2C259	283-5004-00			CAP,FXD,CER DI:0.1UF,10%,25V	80009	283-5004-00
A16A2C344	283-5042-00			CAP,FXD,CER DI:27PF,5%,50V	80009	283-5042-00
A16A2C345	283-5004-00			CAP,FXD,CER DI:0.1UF,10%,25V	80009	283-5004-00
A16A2C346	283-5004-00			CAP,FXD,CER DI:0.1UF,10%,25V	80009	283-5004-00
A16A2C351	283-5004-00			CAP,FXD,CER DI:0.1UF,10%,25V	80009	283-5004-00
A16A2C352	290-0524-00			CAP,FXD,ELCTLT:4.7UF,20%,10V	05397	T368A475M010AZ
A16A2C353	283-5004-00			CAP,FXD,CER DI:0.1UF,10%,25V	80009	283-5004-00
A16A2CR255	152-5004-00			DIODE,SIG:,ULTRA FAST;70V,0.15A,6NS,SER-PAI R;BAV99,SOT-23,8MM TR	25088	BAV99T
A16A2CR256	152-5004-00			DIODE,SIG:,ULTRA FAST;70V,0.15A,6NS,SER-PAI R;BAV99,SOT-23,8MM TR	25088	BAV99T
A16A2CR257	152-5004-00			DIODE,SIG:,ULTRA FAST;70V,0.15A,6NS,SER-PAI R;BAV99,SOT-23,8MM TR	25088	BAV99T
A16A2J350	131-1803-02			CONN,RCPT,ELEC:	80009	131-1803-02
A16A2Q243	151-5000-00			TRANSISTOR,SIG:BIPOLAR,PNP;40V,200MA,250MHZ ,AMPLIFIER;MMBT3906L,TO-236/SOT-23,8MM T&R	04713	MMBT3906LT1
A16A2Q244	151-5001-00			TRANSISTOR,SIG:BIPOLAR,NPN;40V,200MA,300MHZ ,AMPLIFIER;MMBT3904L,TO-236/SOT-23,8MM T&R	80009	151-5001-00
A16A2R150	321-5000-00			RES,FXD:METAL FILM;10 OHM,1%,0.125W,TC=100 PPM;1206,T&R	57668	MCR18EZHFW10E
A16A2R245	321-5004-00			RES,FXD:METAL FILM;22.1 OHM,1%,0.125W,TC=10 0 PPM;1206,T&R	80009	321-5004-00
A16A2R246	321-5004-00			RES,FXD:METAL FILM;22.1 OHM,1%,0.125W,TC=10 0 PPM;1206,T&R	80009	321-5004-00
A16A2R247	321-5004-00			RES,FXD:METAL FILM;22.1 OHM,1%,0.125W,TC=10 0 PPM;1206,T&R	80009	321-5004-00
A16A2R250	321-5018-00			RES,FXD:METAL FILM;1.0K OHM,1%,0.125W,TC=10 0 PPM;1206,T&R	80009	321-5018-00
A16A2R251	321-5012-00			RES,FXD:METAL FILM;332 OHM,1%,0.125W,TC=100 PPM;1206,T&R	80009	321-5012-00
A16A2R252	321-5002-00			RES,FXD:METAL FILM;15 OHM,1%,0.125W,TC=100 PPM;1206,T&R	57668	MCR18EZHFW 15E0
A16A2R253	321-5014-00			RES,FXD:METAL FILM;475 OHM,1%,0.125W,TC=100 PPM;1206,T&R	80009	321-5014-00
A16A2R254	321-5022-00			RES,FXD:METAL FILM;2.21K OHM,1%,0.125W,TC=1 00 PPM;1206,T&R	80009	321-5022-00
A16A2R340	321-5034-00			RES,FXD:METAL FILM;22.1K OHM,1%,0.125W,TC=1 00 PPM;1206,T&R	80009	321-5034-00
A16A2R341	321-5032-00			RES,FXD:METAL FILM;15.0K OHM,1%,0.125W,TC=1 00 PPM;1206,T&R	80009	321-5032-00
A16A2R342	321-5030-00			RES,FXD:METAL FILM;10.0K OHM,1%,0.125W,TC=1 00 PPM;1206,T&R	80009	321-5030-00
A16A2R343	321-5032-00			RES,FXD:METAL FILM;15.0K OHM,1%,0.125W,TC=1 00 PPM;1206,T&R	80009	321-5032-00
A16A2R349	311-5031-00			RES,VAR,NONWW:10K,20%,0.2W	32997	3335W-1-103E

Component No.	Tektronix Part No.	Serial/Assembly No. Effective	Dscont	Name & Description	Mfr. Code	Mfr. Part No.
A16A2R355	321-5015-00			RES,FXD:METAL FILM;562 OHM,1%,0.125W,TC=100 PPM;1206,T&R	80009	321-5015-00
A16A2R356	321-5046-00			RES,FXD:METAL FILM;82.5 OHM,1%,0.125W,TC=10 0 PPM;1206,T&R	80009	321-5046-00
A16A2R357	321-5022-00			RES,FXD:METAL FILM;2.21K OHM,1%,0.125W,TC=1 00 PPM;1206,T&R	80009	321-5022-00
A16A2U348	156-5095-01			IC,LINEAR:BIPOLAR,OP-AMP;LOW NOISE,HIGH OUT PUT DRIVE;NE5534D,SO8.150,12MM T&R	80009	156-5095-01
A16A2VR347	152-5011-00			DIODE,SIG:,;6.2V,5%,225MW;MMBZ5234BL,SOT-23 ,8MM TR	80009	152-5011-00
A16A2VR354	152-5011-00			DIODE,SIG:,;6.2V,5%,225MW;MMBZ5234BL,SOT-23 ,8MM TR	80009	152-5011-00
A17	119-2301-05	B010100	B010155	YIG BUFFER ASSY:	80009	119-2301-05
A17	119-2301-06	B010156		YIG BUFFER ASSY:2712	80009	119-2301-06
A17C172	281-0825-00			CAP,FXD,CER DI:0.005UF,+100-0%,100V	33095	51-726-008
A17C192	281-0825-00			CAP,FXD,CER DI:0.005UF,+100-0%,100V	33095	51-726-008
A17C568	281-0825-00			CAP,FXD,CER DI:0.005UF,+100-0%,100V	33095	51-726-008
A17J100	131-1803-02			CONN,RCPT,ELEC:	80009	131-1803-02
A17J300	131-1803-02			CONN,RCPT,ELEC:	80009	131-1803-02
A17J380	131-1803-02			CONN,RCPT,ELEC:	80009	131-1803-02
A17J430	131-0938-00			CONN,RF JACK::SMB/PNL,;MALE,STR,50 OHM,0.25 HEX,2.0 L 0.025 DIA TAIL,10-32 THD,REAR MT	24931	32JR125-1
A17J460	131-0938-00			CONN,RF JACK::SMB/PNL,;MALE,STR,50 OHM,0.25 HEX,2.0 L 0.025 DIA TAIL,10-32 THD,REAR MT	24931	32JR125-1
A17P1	015-1022-00			TERMN,COAXIAL:50 OHM,0.5W,SMA	80009	015-1022-00
A17P1	015-0567-00	B010189		TERMN,COAXIAL:50 OHM 0.5W DC TO 18.0GHZ (OPTION 15 ONLY)	34078	2444MC-032
A17W27	174-0383-01			CA ASSY,SP,ELEC:6,26 AWG,10.5 L,RIBBON	80009	174-0383-01
A17A1	----- -----			CIRCUIT BD ASSY:YIG BUFFER AMPLIFIER (PART OF A17)		
A17A1C130	283-5002-00			CAP,FXD,CER DI:1000PF,10%,50V	80009	283-5002-00
A17A1C140	283-5002-00			CAP,FXD,CER DI:1000PF,10%,50V	80009	283-5002-00
A17A1C150	283-5002-00			CAP,FXD,CER DI:1000PF,10%,50V	80009	283-5002-00
A17A1C160	283-5018-00			CAP,FXD,CER DI:0.033UF,10%,50V	80009	283-5018-00
A17A1C180	290-5001-00	B010100	B010155	CAP,FXD,ELCTLT:10UF,20%,16V:	TK0900	ALCHIP-S16V10UF
A17A1C180	290-5039-00	B010156		CAP,FXD,ALUM:10UF,20%,50V,6.3MM,SMD,16MM TA PE & REEL.	80009	290-5039-00
A17A1C182	283-5001-00			CAP,FXD,CER DI:100PF,5%,50V	80009	283-5001-00
A17A1C190	283-5003-00			CAP,FXD,CER DI:0.01UF,10%,50V	80009	283-5003-00
A17A1C194	283-5004-00			CAP,FXD,CER DI:0.1UF,10%,25V	80009	283-5004-00
A17A1C266	283-5002-00			CAP,FXD,CER DI:1000PF,10%,50V	80009	283-5002-00
A17A1C267	283-5003-00			CAP,FXD,CER DI:0.01UF,10%,50V	80009	283-5003-00
A17A1C280	283-5001-00			CAP,FXD,CER DI:100PF,5%,50V	80009	283-5001-00
A17A1C282	283-5001-00			CAP,FXD,CER DI:100PF,5%,50V	80009	283-5001-00
A17A1C290	283-5002-00			CAP,FXD,CER DI:1000PF,10%,50V	80009	283-5002-00
A17A1C292	283-5004-00			CAP,FXD,CER DI:0.1UF,10%,25V	80009	283-5004-00
A17A1C296	283-5042-00			CAP,FXD,CER DI:27PF,5%,50V	80009	283-5042-00
A17A1C298	283-5004-00			CAP,FXD,CER DI:0.1UF,10%,25V	80009	283-5004-00
A17A1C340	283-5005-00			CAP,FXD,CER DI:4PF,+/- 0.25PF,50V	54583	C3216C0G1H040C
A17A1C392	290-5001-00	B010100	B010155	CAP,FXD,ELCTLT:10UF,20%,16V	TK0900	ALCHIP-S16V10UF
A17A1C392	290-5039-00	B010156		CAP,FXD,ALUM:10UF,20%,50V,6.3MM,SMD,16MM TA PE & REEL.	80009	290-5039-00
A17A1C442	283-5000-00			CAP,FXD,CER DI:10PF,5%,50V	80009	283-5000-00
A17A1C444	283-5000-00			CAP,FXD,CER DI:10PF,5%,50V	80009	283-5000-00
A17A1C466	283-5003-00			CAP,FXD,CER DI:0.01UF,10%,50V	80009	283-5003-00
A17A1C468	283-5004-00			CAP,FXD,CER DI:0.1UF,10%,25V	80009	283-5004-00
A17A1C550	283-5004-00			CAP,FXD,CER DI:0.1UF,10%,25V	80009	283-5004-00
A17A1C560	283-5004-00			CAP,FXD,CER DI:0.1UF,10%,25V	80009	283-5004-00

Component No.	Tektronix Part No.	Serial/Assembly No. Effective	Dscont	Name & Description	Mfr. Code	Mfr. Part No.
A17A1CR178	152-0962-00			SEMICOND DVC,DI:SCHOTTKY,SI,CER STRIPLINE CASE	80009	152-0962-00
A17A1CR290	152-0843-00			DIODE,SIG:SCHTKY,;SER-PAIR,20V,410MV,1.3PF;HSMS-2812,SOT-23,T&R	80009	152-0843-00
A17A1HY450	155-0338-00			MICROCKT,LINEAR:0 GATE	80009	155-0338-00
A17A1Q150	151-1221-00			TRANSISTOR,SIG:MESFET,N-CH;GAAS,20MS,3DB@4GHZ;NE72084	80009	151-1221-00
A17A1Q158	151-5000-00			TRANSISTOR,SIG:BIPOLAR,PNP;40V,200MA,250MHZ,AMPLIFIER;MMBT3906L,TO-236/SOT-23,8MM T&R	04713	MMBT3906LT1
A17A1Q164	151-5000-00			TRANSISTOR,SIG:BIPOLAR,PNP;40V,200MA,250MHZ,AMPLIFIER;MMBT3906L,TO-236/SOT-23,8MM T&R	04713	MMBT3906LT1
A17A1Q190	151-5004-00			TRANSISTOR,SIG:BIPOLAR,NPN;20V,1.0A,65MHZ,AMPLIFIER;BCX68/BC868,SOT-89,12MM T/R	04713	BCX68
A17A1Q460	151-5009-00			TRANSISTOR,SIG:BIPOLAR,NPN;25V,300MA,1.2GHZ,AMPLIFIER;BFQ17,SOT-89,12MM T/R	80009	151-5009-00
A17A1R128	321-5016-00			RES,FXD:METAL FILM;681 OHM,1%,0.125W,TC=100 PPM;1206,T&R	01121	BCK6810FT
A17A1R130	321-5016-00			RES,FXD:METAL FILM;681 OHM,1%,0.125W,TC=100 PPM;1206,T&R	01121	BCK6810FT
A17A1R132	321-5002-00			RES,FXD:METAL FILM;15 OHM,1%,0.125W,TC=100 PPM;1206,T&R	57668	MCR18EZHFW 15E0
A17A1R142	321-5011-00			RES,FXD:METAL FILM;274 OHM,1%,0.125W,TC=100 PPM;1206,T&R	80009	321-5011-00
A17A1R144	321-5011-00			RES,FXD:METAL FILM;274 OHM,1%,0.125W,TC=100 PPM;1206,T&R	80009	321-5011-00
A17A1R158	321-5015-00			RES,FXD:METAL FILM;562 OHM,1%,0.125W,TC=100 PPM;1206,T&R	80009	321-5015-00
A17A1R160	321-5027-00			RES,FXD:METAL FILM;5.62K OHM,1%,0.125W,TC=100 PPM;1206,T&R	80009	321-5027-00
A17A1R161	321-5023-00			RES,FXD:METAL FILM;2.74K OHM,1%,0.125W,TC=100 PPM;1206,T&R	80009	321-5023-00
A17A1R164	321-5005-00			RES,FXD:METAL FILM;27.4 OHM,1%,0.125W,TC=100 PPM;1206,T&R	80009	321-5005-00
A17A1R166	321-5026-00			RES,FXD:METAL FILM;4.75K OHM,1%,0.125W,TC=100 PPM;1206,T&R	80009	321-5026-00
A17A1R168	321-5010-00			RES,FXD:METAL FILM;221 OHM,1%,0.125W,TC=100 PPM;1206,T&R	80009	321-5010-00
A17A1R178	321-5000-00			RES,FXD:METAL FILM;10 OHM,1%,0.125W,TC=100 PPM;1206,T&R	57668	MCR18EZHFW10E
A17A1R179	321-5006-00			RES,FXD:METAL FILM;100 OHM,1%,0.125W,TC=100 PPM;1206,T&R	80009	321-5006-00
A17A1R184	321-5013-00			RES,FXD:METAL FILM;392 OHM,1%,0.125W,TC=100 PPM;1206,T&R	80009	321-5013-00
A17A1R186	321-5048-00			RES,FXD:METAL FILM;332K OHM,1%,0.125W,TC=100 PPM;1206,T&R	80009	321-5048-00
A17A1R192	321-5000-00			RES,FXD:METAL FILM;10 OHM,1%,0.125W,TC=100 PPM;1206,T&R	57668	MCR18EZHFW10E
A17A1R194	321-5005-00			RES,FXD:METAL FILM;27.4 OHM,1%,0.125W,TC=100 PPM;1206,T&R	80009	321-5005-00
A17A1R224	321-5006-00			RES,FXD:METAL FILM;100 OHM,1%,0.125W,TC=100 PPM;1206,T&R	80009	321-5006-00
A17A1R230	321-5016-00			RES,FXD:METAL FILM;681 OHM,1%,0.125W,TC=100 PPM;1206,T&R	01121	BCK6810FT
A17A1R232	321-5016-00			RES,FXD:METAL FILM;681 OHM,1%,0.125W,TC=100 PPM;1206,T&R	01121	BCK6810FT
A17A1R264	321-5024-00			RES,FXD:METAL FILM;3.32K OHM,1%,0.125W,TC=100 PPM;1206,T&R	80009	321-5024-00
A17A1R266	321-5009-00			RES,FXD:METAL FILM;182 OHM,1%,0.125W,TC=100 PPM;1206,T&R	80009	321-5009-00

Component No.	Tektronix Part No.	Serial/Assembly No. Effective	Dscont	Name & Description	Mfr. Code	Mfr. Part No.
A17A1R278	321-5006-00			RES,FXD:METAL FILM;100 OHM,1%,0.125W,TC=100 PPM;1206,T&R	80009	321-5006-00
A17A1R280	321-5006-00			RES,FXD:METAL FILM;100 OHM,1%,0.125W,TC=100 PPM;1206,T&R	80009	321-5006-00
A17A1R281	321-5006-00			RES,FXD:METAL FILM;100 OHM,1%,0.125W,TC=100 PPM;1206,T&R	80009	321-5006-00
A17A1R282	321-5006-00			RES,FXD:METAL FILM;100 OHM,1%,0.125W,TC=100 PPM;1206,T&R	80009	321-5006-00
A17A1R284	321-5020-00			RES,FXD:METAL FILM;1.5K OHM,1%,0.125W,TC=10 0 PPM;1206,T&R	80009	321-5020-00
A17A1R286	321-5012-00			RES,FXD:METAL FILM;332 OHM,1%,0.125W,TC=100 PPM;1206,T&R	80009	321-5012-00
A17A1R288	311-2227-00			RES,VAR,NONWW:TRMR,100 OHM,20%,0.5W LINEAR	TK1450	GF06UT 100
A17A1R294	321-5048-00			RES,FXD:METAL FILM;332K OHM,1%,0.125W,TC=10 0 PPM;1206,T&R	80009	321-5048-00
A17A1R296	321-5048-00			RES,FXD:METAL FILM;332K OHM,1%,0.125W,TC=10 0 PPM;1206,T&R	80009	321-5048-00
A17A1R310	321-5006-00			RES,FXD:METAL FILM;100 OHM,1%,0.125W,TC=100 PPM;1206,T&R	80009	321-5006-00
A17A1R322	321-5011-00			RES,FXD:METAL FILM;274 OHM,1%,0.125W,TC=100 PPM;1206,T&R	80009	321-5011-00
A17A1R324	321-5011-00			RES,FXD:METAL FILM;274 OHM,1%,0.125W,TC=100 PPM;1206,T&R	80009	321-5011-00
A17A1R326	321-5042-00			RES,FXD:METAL FILM;39.2 OHM,1%,0.125W,TC=10 0 PPM;1206,T&R	80009	321-5042-00
A17A1R332	321-5011-00			RES,FXD:METAL FILM;274 OHM,1%,0.125W,TC=100 PPM;1206,T&R	80009	321-5011-00
A17A1R334	321-5011-00			RES,FXD:METAL FILM;274 OHM,1%,0.125W,TC=100 PPM;1206,T&R	80009	321-5011-00
A17A1R394	321-5044-00			RES,FXD:METAL FILM;56.2 OHM,1%,0.125W,TC=10 0 PPM;1206,T&R	01121	BCD56R2FT
A17A1R438	311-0607-00			RES,VAR,NONWW:TRMR,10K OHM,0.5W	80009	311-0607-00
A17A1R450	321-5045-00			RES,FXD:METAL FILM;68.1 OHM,1%,0.125W,TC=10 0 PPM;1206,T&R	80009	321-5045-00
A17A1R464	321-5000-00			RES,FXD:METAL FILM;10 OHM,1%,0.125W,TC=100 PPM;1206,T&R	57668	MCR18EZHFW10E
A17A1R466	321-5046-00			RES,FXD:METAL FILM;82.5 OHM,1%,0.125W,TC=10 0 PPM;1206,T&R	80009	321-5046-00
A17A1R540	321-5034-00			RES,FXD:METAL FILM;22.1K OHM,1%,0.125W,TC=1 00 PPM;1206,T&R	80009	321-5034-00
A17A1R542	321-5034-00			RES,FXD:METAL FILM;22.1K OHM,1%,0.125W,TC=1 00 PPM;1206,T&R	80009	321-5034-00
A17A1R550	321-5015-00			RES,FXD:METAL FILM;562 OHM,1%,0.125W,TC=100 PPM;1206,T&R	80009	321-5015-00
A17A1R552	321-5044-00			RES,FXD:METAL FILM;56.2 OHM,1%,0.125W,TC=10 0 PPM;1206,T&R	01121	BCD56R2FT
A17A1R560	321-5015-00			RES,FXD:METAL FILM;562 OHM,1%,0.125W,TC=100 PPM;1206,T&R	80009	321-5015-00
A17A1R562	321-5018-00			RES,FXD:METAL FILM;1.0K OHM,1%,0.125W,TC=10 0 PPM;1206,T&R	80009	321-5018-00
A17A1R563	321-5043-00			RES,FXD:METAL FILM;47.5 OHM,1%,0.125W,TC=10 0 PPM;1206,T&R	80009	321-5043-00
A17A1R564	321-5051-00			RES,FXD:METAL FILM;0 OHM,1%,0.125W,TC=100 P PM;1206,T&R	80009	321-5051-00
A17A1T450	120-1737-00			TRANSFORMER,RF:BALUN,5:2 RATIO,#34 WIRE,276 -0712-00 CORE	0JR03	120-1737-00
A17A1U290	156-5095-01			IC,LINEAR:BIPOLAR,OP-AMP;LOW NOISE,HIGH OUT PUT DRIVE;NE5534D,S08.150,12MM T&R	80009	156-5095-01

Component No.	Tektronix Part No.	Serial/Assembly No. Effective	Dscont	Name & Description	Mfr. Code	Mfr. Part No.
A17A1VR190	152-5015-00			DIODE,ZENER:,;7.5V,5%,225MW;MMBZ5236BL,SOT-23,8MM TR	80009	152-5015-00
A17A1VR284	152-5011-00			DIODE,SIG:,;6.2V,5%,225MW;MMBZ5234BL,SOT-23,8MM TR	80009	152-5011-00
A18	672-1297-00	B010100	B010120	CIRCUIT BD ASSY:RF ATTN	80009	672-1297-00
A18	672-1297-01	B010121		CIRCUIT BD ASSY:RF ATTN	80009	672-1297-01
A18J210	131-4203-00			CONN,RF JACK:	80009	131-4203-00
A18A1	----- -----			(PART OF A18) DIGITAL CONTROL		
A18A1C311	290-5002-00			CAP,FXD,ELCTLT:10UF,20V	TK1424	20MC100M-TER
A18A1C330	290-5002-00			CAP,FXD,ELCTLT:10UF,20V	TK1424	20MC100M-TER
A18A1C412	290-5002-00			CAP,FXD,ELCTLT:10UF,20V	TK1424	20MC100M-TER
A18A1Q300	151-5000-00			TRANSISTOR,SIG:BIPOLAR,PNP;40V,200MA,250MHZ,AMPLIFIER;MMBT3906L,TO-236/SOT-23,8MM T&R	04713	MMBT3906LT1
A18A1Q421	151-5000-00			TRANSISTOR,SIG:BIPOLAR,PNP;40V,200MA,250MHZ,AMPLIFIER;MMBT3906L,TO-236/SOT-23,8MM T&R	04713	MMBT3906LT1
A18A1Q430	151-5000-00			TRANSISTOR,SIG:BIPOLAR,PNP;40V,200MA,250MHZ,AMPLIFIER;MMBT3906L,TO-236/SOT-23,8MM T&R	04713	MMBT3906LT1
A18A1Q432	151-5000-00			TRANSISTOR,SIG:BIPOLAR,PNP;40V,200MA,250MHZ,AMPLIFIER;MMBT3906L,TO-236/SOT-23,8MM T&R	04713	MMBT3906LT1
A18A1Q434	151-5000-00			TRANSISTOR,SIG:BIPOLAR,PNP;40V,200MA,250MHZ,AMPLIFIER;MMBT3906L,TO-236/SOT-23,8MM T&R	04713	MMBT3906LT1
A18A1Q441	151-5000-00			TRANSISTOR,SIG:BIPOLAR,PNP;40V,200MA,250MHZ,AMPLIFIER;MMBT3906L,TO-236/SOT-23,8MM T&R	04713	MMBT3906LT1
A18A1Q443	151-5000-00			TRANSISTOR,SIG:BIPOLAR,PNP;40V,200MA,250MHZ,AMPLIFIER;MMBT3906L,TO-236/SOT-23,8MM T&R	04713	MMBT3906LT1
A18A1Q445	151-5000-00			TRANSISTOR,SIG:BIPOLAR,PNP;40V,200MA,250MHZ,AMPLIFIER;MMBT3906L,TO-236/SOT-23,8MM T&R	04713	MMBT3906LT1
A18A1R301	321-5030-00			RES,FXD:METAL FILM;10.0K OHM,1%,0.125W,TC=100 PPM;1206,T&R	80009	321-5030-00
A18A1R312	321-5000-00			RES,FXD:METAL FILM;10 OHM,1%,0.125W,TC=100 PPM;1206,T&R	57668	MCR18EZHFW10E
A18A1R321	321-5000-00			RES,FXD:METAL FILM;10 OHM,1%,0.125W,TC=100 PPM;1206,T&R	57668	MCR18EZHFW10E
A18A1R400	321-5018-00			RES,FXD:METAL FILM;1.0K OHM,1%,0.125W,TC=100 PPM;1206,T&R	80009	321-5018-00
A18A1R401	321-5018-00			RES,FXD:METAL FILM;1.0K OHM,1%,0.125W,TC=100 PPM;1206,T&R	80009	321-5018-00
A18A1R410	321-5030-00			RES,FXD:METAL FILM;10.0K OHM,1%,0.125W,TC=100 PPM;1206,T&R	80009	321-5030-00
A18A1R411	321-5018-00			RES,FXD:METAL FILM;1.0K OHM,1%,0.125W,TC=100 PPM;1206,T&R	80009	321-5018-00
A18A1R413	321-5030-00			RES,FXD:METAL FILM;10.0K OHM,1%,0.125W,TC=100 PPM;1206,T&R	80009	321-5030-00
A18A1R420	321-5026-00			RES,FXD:METAL FILM;4.75K OHM,1%,0.125W,TC=100 PPM;1206,T&R	80009	321-5026-00
A18A1R422	321-5026-00			RES,FXD:METAL FILM;4.75K OHM,1%,0.125W,TC=100 PPM;1206,T&R	80009	321-5026-00
A18A1R431	321-5026-00			RES,FXD:METAL FILM;4.75K OHM,1%,0.125W,TC=100 PPM;1206,T&R	80009	321-5026-00
A18A1R433	321-5026-00			RES,FXD:METAL FILM;4.75K OHM,1%,0.125W,TC=100 PPM;1206,T&R	80009	321-5026-00
A18A1R440	321-5026-00			RES,FXD:METAL FILM;4.75K OHM,1%,0.125W,TC=100 PPM;1206,T&R	80009	321-5026-00
A18A1R442	321-5026-00			RES,FXD:METAL FILM;4.75K OHM,1%,0.125W,TC=100 PPM;1206,T&R	80009	321-5026-00
A18A1R444	321-5026-00			RES,FXD:METAL FILM;4.75K OHM,1%,0.125W,TC=100 PPM;1206,T&R	80009	321-5026-00
A18A1U414	156-5021-01			IC,DIGITAL:CMOS,REGISTER;8-STAGE SHIFT/STORAGE, 3-STATE;4094,SO16.150,16MM T&R	80009	156-5021-01

Component No.	Tektronix Part No.	Serial/Assembly No. Effective	Dscont	Name & Description	Mfr. Code	Mfr. Part No.
A18A2	----- -----			(PART OF A18) RF		
A18A2C110	283-0253-00			CAP,FXD,CER DI:0.01UF,10%,100V	80009	283-0253-00
A18A2C111	283-0278-02	B010100	B010120	CAP,FXD,CER DI:2.2UF,100V,20%	51642	
A18A2C111	283-5016-00	B010121		CAP,FXD,CER DI:1UF,10%,50V	80009	283-5016-00
A18A2C112	283-5016-00	B010121		CAP,FXD,CER DI:1UF,10%,50V	80009	283-5016-00
A18A2C123	283-5004-00			CAP,FXD,CER DI:0.1UF,10%,25V	80009	283-5004-00
A18A2C138	281-0720-00			CAP,FXD,CER DI:1750PF,+80-20%,250V	33095	51-707-002
A18A2C143	283-5004-00			CAP,FXD,CER DI:0.1UF,10%,25V	80009	283-5004-00
A18A2C144	283-5004-00			CAP,FXD,CER DI:0.1UF,10%,25V	80009	283-5004-00
A18A2C145	283-5004-00			CAP,FXD,CER DI:0.1UF,10%,25V	80009	283-5004-00
A18A2C151	283-5004-00			CAP,FXD,CER DI:0.1UF,10%,25V	80009	283-5004-00
A18A2C210	283-5004-00			CAP,FXD,CER DI:0.1UF,10%,25V	80009	283-5004-00
A18A2C220	283-5004-00			CAP,FXD,CER DI:0.1UF,10%,25V	80009	283-5004-00
A18A2C222	281-0720-00			CAP,FXD,CER DI:1750PF,+80-20%,250V	33095	51-707-002
A18A2C225	283-5004-00			CAP,FXD,CER DI:0.1UF,10%,25V	80009	283-5004-00
A18A2C228	281-0720-00			CAP,FXD,CER DI:1750PF,+80-20%,250V	33095	51-707-002
A18A2C230	283-5004-00			CAP,FXD,CER DI:0.1UF,10%,25V	80009	283-5004-00
A18A2C232	281-0720-00			CAP,FXD,CER DI:1750PF,+80-20%,250V	33095	51-707-002
A18A2C233	281-0322-00			CAP,VAR,CERAMIC:TRMR,0.5PF/2.0PF,250VDC	52769	GKZ2R000
A18A2C238	281-0720-00			CAP,FXD,CER DI:1750PF,+80-20%,250V	33095	51-707-002
A18A2C239	281-0221-00			CAP,VAR,CER DI:2-10PF,100V	80009	281-0221-00
A18A2C240	283-5004-00			CAP,FXD,CER DI:0.1UF,10%,25V	80009	283-5004-00
A18A2C242	281-0720-00			CAP,FXD,CER DI:1750PF,+80-20%,250V	33095	51-707-002
A18A2C244	281-0720-00			CAP,FXD,CER DI:1750PF,+80-20%,250V	33095	51-707-002
A18A2C245	283-5004-00			CAP,FXD,CER DI:0.1UF,10%,25V	80009	283-5004-00
A18A2C248	281-0720-00			CAP,FXD,CER DI:1750PF,+80-20%,250V	33095	51-707-002
A18A2J100	131-4203-00			CONN,RF JACK:	80009	131-4203-00
A18A2J150	131-4203-00			CONN,RF JACK:	80009	131-4203-00
A18A2J200	131-4203-00			CONN,RF JACK:	80009	131-4203-00
A18A2J250	131-4203-00			CONN,RF JACK:	80009	131-4203-00
A18A2K110	148-0198-00			RELAY,ARMATURE:2 FORM C,COIL 6VDC, 98 OHM,C ONTACT 1A@28 VDC,PKG TO-5	11532	712-6
A18A2K120	148-0198-00			RELAY,ARMATURE:2 FORM C,COIL 6VDC, 98 OHM,C ONTACT 1A@28 VDC,PKG TO-5	11532	712-6
A18A2K125	148-0198-00			RELAY,ARMATURE:2 FORM C,COIL 6VDC, 98 OHM,C ONTACT 1A@28 VDC,PKG TO-5	11532	712-6
A18A2K130	148-0198-00			RELAY,ARMATURE:2 FORM C,COIL 6VDC, 98 OHM,C ONTACT 1A@28 VDC,PKG TO-5	11532	712-6
A18A2K135	148-0198-00			RELAY,ARMATURE:2 FORM C,COIL 6VDC, 98 OHM,C ONTACT 1A@28 VDC,PKG TO-5	11532	712-6
A18A2K140	148-0198-00			RELAY,ARMATURE:2 FORM C,COIL 6VDC, 98 OHM,C ONTACT 1A@28 VDC,PKG TO-5	11532	712-6
A18A2K145	148-0198-00			RELAY,ARMATURE:2 FORM C,COIL 6VDC, 98 OHM,C ONTACT 1A@28 VDC,PKG TO-5	11532	712-6
A18A2R100	321-5007-00			RES,FXD:METAL FILM;121 OHM,1%,0.125W,TC=100 PPM;1206,T&R	80009	321-5007-00
A18A2R101	321-5007-00			RES,FXD:METAL FILM;121 OHM,1%,0.125W,TC=100 PPM;1206,T&R	80009	321-5007-00
A18A2R102	321-5044-00			RES,FXD:METAL FILM;56.2 OHM,1%,0.125W,TC=10 0 PPM;1206,T&R	01121	BCD56R2FT
A18A2R112	321-5043-00			RES,FXD:METAL FILM;47.5 OHM,1%,0.125W,TC=10 0 PPM;1206,T&R	80009	321-5043-00
A18A2R113	321-5027-00			RES,FXD:METAL FILM;5.62K OHM,1%,0.125W,TC=1 00 PPM;1206,T&R	80009	321-5027-00
A18A2R114	321-5044-00			RES,FXD:METAL FILM;56.2 OHM,1%,0.125W,TC=10 0 PPM;1206,T&R	01121	BCD56R2FT
A18A2R115	321-5010-00			RES,FXD:METAL FILM;221 OHM,1%,0.125W,TC=100 PPM;1206,T&R	80009	321-5010-00

Component No.	Tektronix Part No.	Serial/Assembly No. Effective	Dscont	Name & Description	Mfr. Code	Mfr. Part No.
A18A2R120	321-5044-00			RES,FXD:METAL FILM;56.2 OHM,1%,0.125W,TC=100 PPM;1206,T&R	01121	BCD56R2FT
A18A2R121	321-5007-00			RES,FXD:METAL FILM;121 OHM,1%,0.125W,TC=100 PPM;1206,T&R	80009	321-5007-00
A18A2R122	321-5007-00			RES,FXD:METAL FILM;121 OHM,1%,0.125W,TC=100 PPM;1206,T&R	80009	321-5007-00
A18A2R123	321-5044-00			RES,FXD:METAL FILM;56.2 OHM,1%,0.125W,TC=100 PPM;1206,T&R	01121	BCD56R2FT
A18A2R130	321-5010-00			RES,FXD:METAL FILM;221 OHM,1%,0.125W,TC=100 PPM;1206,T&R	80009	321-5010-00
A18A2R131	321-5010-00			RES,FXD:METAL FILM;221 OHM,1%,0.125W,TC=100 PPM;1206,T&R	80009	321-5010-00
A18A2R132	321-5004-00			RES,FXD:METAL FILM;22.1 OHM,1%,0.125W,TC=100 PPM;1206,T&R	80009	321-5004-00
A18A2R133	321-5014-00			RES,FXD:METAL FILM;475 OHM,1%,0.125W,TC=100 PPM;1206,T&R	80009	321-5014-00
A18A2R134	321-5013-00			RES,FXD:METAL FILM;392 OHM,1%,0.125W,TC=100 PPM;1206,T&R	80009	321-5013-00
A18A2R135	321-5001-00			RES,FXD:METAL FILM;12.1 OHM,1%,0.125W,TC=100 PPM;1206,T&R	57668	MCR18EZHFW 12E1
A18A2R140	321-5045-00			RES,FXD:METAL FILM;68.1 OHM,1%,0.125W,TC=100 PPM;1206,T&R	80009	321-5045-00
A18A2R141	321-5045-00			RES,FXD:METAL FILM;68.1 OHM,1%,0.125W,TC=100 PPM;1206,T&R	80009	321-5045-00
A18A2R142	321-5008-00			RES,FXD:METAL FILM;150 OHM,1%,0.125W,TC=100 PPM;1206,T&R	80009	321-5008-00
A18A2R150	321-5000-00			RES,FXD:METAL FILM;10 OHM,1%,0.125W,TC=100 PPM;1206,T&R	57668	MCR18EZHFW10E
A18A2R250	321-5015-00			RES,FXD:METAL FILM;562 OHM,1%,0.125W,TC=100 PPM;1206,T&R	80009	321-5015-00
A18A2R251	321-5044-00			RES,FXD:METAL FILM;56.2 OHM,1%,0.125W,TC=100 PPM;1206,T&R	01121	BCD56R2FT
A18A2U155	156-2691-00			IC,LINEAR:BIPOLAR,AMPLIFIER;MICROWAVE,17DB GAIN,950MHZ;UPC1654A,TO-33	80009	156-2691-00
A19	119-2206-00			OSCILLATOR,RF:1.9 TO 4.0 GHZ	80009	119-2206-00
A19A1	----- -----			CIRCUIT BD ASSY:YIG INTERFACE (PART OF A19)		
A19A1C120	290-0326-02			CAP,FXD,ELCTLT:820UF,10%,6V	24165	109D827X9006F2
A19A1C240	290-0726-00			CAP,FXD,ELCTLT:220UF,20%,10V	80009	290-0726-00
A19A1C260	290-5001-00	B010100	B010137	CAP,FXD,ELCTLT:10UF,20%,16V	TK0900	ALCHIP-S16V10UF
A19A1C260	290-0804-00	B010138		CAP,FXD,ELCTLT:10UF,+50-20%,25V	80009	290-0804-00
A19A1C320	290-0326-02			CAP,FXD,ELCTLT:820UF,10%,6V	24165	109D827X9006F2
A19A1C430	290-0726-00			CAP,FXD,ELCTLT:220UF,20%,10V	80009	290-0726-00
A19A1CR320	152-5005-00			DIODE,SIG:,ULTRA FAST;70V,0.15A,6NS,COM-ANODE;BAW56,SOT-23,8MM TR	80009	152-5005-00
A19A1J230	131-3774-00			CONN,HDR:PCB,;MALE,STR,2 X 36,0.1 CTR,0.230 MLG X 0.095 TAIL,30 GOLD;	22526	65610-172
A19A1K220	148-5000-00			RELAY,REED:	80009	148-5000-00
A19A1Q120	151-5000-00			TRANSISTOR,SIG:BIPOLAR,PNP;40V,200MA,250MHZ ,AMPLIFIER;MMBT3906L,TO-236/SOT-23,8MM T&R	04713	MMBT3906LT1
A19A1Q140	151-5001-00			TRANSISTOR,SIG:BIPOLAR,NPN;40V,200MA,300MHZ ,AMPLIFIER;MMBT3904L,TO-236/SOT-23,8MM T&R	80009	151-5001-00
A19A1Q318	151-5001-00			TRANSISTOR,SIG:BIPOLAR,NPN;40V,200MA,300MHZ ,AMPLIFIER;MMBT3904L,TO-236/SOT-23,8MM T&R	80009	151-5001-00
A19A1Q320	151-5001-00			TRANSISTOR,SIG:BIPOLAR,NPN;40V,200MA,300MHZ ,AMPLIFIER;MMBT3904L,TO-236/SOT-23,8MM T&R	80009	151-5001-00
A19A1Q328	151-5000-00			TRANSISTOR,SIG:BIPOLAR,PNP;40V,200MA,250MHZ ,AMPLIFIER;MMBT3906L,TO-236/SOT-23,8MM T&R	04713	MMBT3906LT1
A19A1R118	321-0097-00			RES,FXD,FILM:100 OHM,1%,0.125W,TC=TO	91637	CMF55116G100ROF

Component No.	Tektronix Part No.	Serial/Assembly No. Effective	Dscont	Name & Description	Mfr. Code	Mfr. Part No.
A19A1R130	321-5045-00			RES,FXD:METAL FILM;68.1 OHM,1%,0.125W,TC=100 PPM;1206,T&R	80009	321-5045-00
A19A1R131	311-2230-00			RES,VAR,TRMR:CERMET;500 OHM,20%,0.5W,0.197 SQ,TOP ADJUST;T&R	TK1450	GF06UT 500
A19A1R136	321-0306-00			RES,FXD,FILM:15.0K OHM,1%,0.125W,TC=T0	80009	321-0306-00
A19A1R212	321-0122-00			RES,FXD,FILM:182 OHM,1%,0.125W,TC=T0	80009	321-0122-00
A19A1R214	321-0202-00			RES,FXD,FILM:1.24K OHM,1%,0.125W,TC=T0	19701	5043ED1K240F
A19A1R216	321-0139-00			RES,FXD,FILM:274 OHM,1%,0.125W,TC=T0	07716	CEAD274R0F
A19A1R218	321-5018-00			RES,FXD:METAL FILM;1.0K OHM,1%,0.125W,TC=100 PPM;1206,T&R	80009	321-5018-00
A19A1R219	321-5018-00			RES,FXD:METAL FILM;1.0K OHM,1%,0.125W,TC=100 PPM;1206,T&R	80009	321-5018-00
A19A1R230	321-0289-07			RES,FXD,FILM:10.0K OHM,0.1%,0.125W,TC=T9	80009	321-0289-07
A19A1R232	321-5022-00			RES,FXD:METAL FILM;2.21K OHM,1%,0.125W,TC=100 PPM;1206,T&R	80009	321-5022-00
A19A1R234	321-5000-00			RES,FXD:METAL FILM;10 OHM,1%,0.125W,TC=100 PPM;1206,T&R	57668	MCR18EZHFW10E
A19A1R236	321-5000-00			RES,FXD:METAL FILM;10 OHM,1%,0.125W,TC=100 PPM;1206,T&R	57668	MCR18EZHFW10E
A19A1R240	321-5022-00			RES,FXD:METAL FILM;2.21K OHM,1%,0.125W,TC=100 PPM;1206,T&R	80009	321-5022-00
A19A1R318	321-0289-07			RES,FXD,FILM:10.0K OHM,0.1%,0.125W,TC=T9	80009	321-0289-07
A19A1R320	321-5022-00			RES,FXD:METAL FILM;2.21K OHM,1%,0.125W,TC=100 PPM;1206,T&R	80009	321-5022-00
A19A1R322	321-5043-00			RES,FXD:METAL FILM;47.5 OHM,1%,0.125W,TC=100 PPM;1206,T&R	80009	321-5043-00
A19A1R324	321-0816-07			RES,FXD,FILM:5K OHM,0.1%,0.125W,TC=T9	80009	321-0816-07
A19A1R326	321-5022-00			RES,FXD:METAL FILM;2.21K OHM,1%,0.125W,TC=100 PPM;1206,T&R	80009	321-5022-00
A19A1R327	321-5000-00			RES,FXD:METAL FILM;10 OHM,1%,0.125W,TC=100 PPM;1206,T&R	57668	MCR18EZHFW10E
A19A1R328	321-5000-00			RES,FXD:METAL FILM;10 OHM,1%,0.125W,TC=100 PPM;1206,T&R	57668	MCR18EZHFW10E
A19A1R330	311-2230-00			RES,VAR,TRMR:CERMET;500 OHM,20%,0.5W,0.197 SQ,TOP ADJUST;T&R	TK1450	GF06UT 500
A19A1R340	311-2230-00			RES,VAR,TRMR:CERMET;500 OHM,20%,0.5W,0.197 SQ,TOP ADJUST;T&R	TK1450	GF06UT 500
A19A1R360	321-0289-07			RES,FXD,FILM:10.0K OHM,0.1%,0.125W,TC=T9	80009	321-0289-07
A19A1R362	321-0289-07			RES,FXD,FILM:10.0K OHM,0.1%,0.125W,TC=T9	80009	321-0289-07
A19A1R364	321-5006-00			RES,FXD:METAL FILM;100 OHM,1%,0.125W,TC=100 PPM;1206,T&R	80009	321-5006-00
A19A1U120	156-5082-01			IC,LINEAR:BIPOLAR,OP-AMP;LOW OFFSET;OP07CD, SO8.150,16MM T&R	80009	156-5082-01
A19A1U320	156-5082-01			IC,LINEAR:BIPOLAR,OP-AMP;LOW OFFSET;OP07CD, SO8.150,16MM T&R	80009	156-5082-01
A19A1U350	156-5297-00			IC,LINEAR:BIPOLAR,VOLTAGE REGULATOR;ADJUSTABLE,SHUNT,100MA,2%;TL431CD,SO8.150,TUBE	80009	156-5297-00
A19A1VR120	152-0304-00			DIODE,ZENER:,;20V,5%,0.4W;1N968B,DO-35 OR 7 ,TR	80009	152-0304-00
A19A1VR218	152-0304-00			DIODE,ZENER:,;20V,5%,0.4W;1N968B,DO-35 OR 7 ,TR	80009	152-0304-00
A21	670-9470-01		B031399	CIRCUIT BD ASSY:REFERENCE OSCILLATOR	80009	670-9470-01
A21	670-9470-02					
A21	670-9470-03	B041400				
A21C112	283-5004-00			CAP,FXD,CER DI:0.1UF,10%,25V	80009	283-5004-00
A21C140	283-5001-00			CAP,FXD,CER DI:100PF,5%,50V	80009	283-5001-00
A21C141	283-5001-00			CAP,FXD,CER DI:100PF,5%,50V	80009	283-5001-00
A21C151	283-5001-00			CAP,FXD,CER DI:100PF,5%,50V	80009	283-5001-00
A21C200	283-5004-00			CAP,FXD,CER DI:0.1UF,10%,25V	80009	283-5004-00
A21C232	281-0957-00			CAP,FXD,CER DI:82PF,5%,500V	80009	281-0957-00
A21C250	283-5001-00			CAP,FXD,CER DI:100PF,5%,50V	80009	283-5001-00

Component No.	Tektronix Part No.	Serial/Assembly No. Effective	Dscont	Name & Description	Mfr. Code	Mfr. Part No.
A21C255	283-5004-00			CAP,FXD,CER DI:0.1UF,10%,25V	80009	283-5004-00
A21C256	283-5004-00			CAP,FXD,CER DI:0.1UF,10%,25V	80009	283-5004-00
A21C261	283-5004-00			CAP,FXD,CER DI:0.1UF,10%,25V	80009	283-5004-00
A21C272	283-5001-00			CAP,FXD,CER DI:100PF,5%,50V	80009	283-5001-00
A21C280	283-5001-00			CAP,FXD,CER DI:100PF,5%,50V	80009	283-5001-00
A21C287	283-5004-00			CAP,FXD,CER DI:0.1UF,10%,25V	80009	283-5004-00
A21C331	283-5004-00			CAP,FXD,CER DI:0.1UF,10%,25V	80009	283-5004-00
A21C353	283-5004-00			CAP,FXD,CER DI:0.1UF,10%,25V	80009	283-5004-00
A21C360	283-5001-00			CAP,FXD,CER DI:100PF,5%,50V	80009	283-5001-00
A21C363	283-5004-00			CAP,FXD,CER DI:0.1UF,10%,25V	80009	283-5004-00
A21C371	283-5004-00			CAP,FXD,CER DI:0.1UF,10%,25V	80009	283-5004-00
A21C374	283-5004-00			CAP,FXD,CER DI:0.1UF,10%,25V	80009	283-5004-00
A21C383	283-5004-00			CAP,FXD,CER DI:0.1UF,10%,25V	80009	283-5004-00
A21C431	283-5004-00			CAP,FXD,CER DI:0.1UF,10%,25V	80009	283-5004-00
A21C441	283-5004-00			CAP,FXD,CER DI:0.1UF,10%,25V	80009	283-5004-00
A21C460	283-5004-00			CAP,FXD,CER DI:0.1UF,10%,25V	80009	283-5004-00
A21C471	283-5004-00			CAP,FXD,CER DI:0.1UF,10%,25V	80009	283-5004-00
A21C480	283-5004-00			CAP,FXD,CER DI:0.1UF,10%,25V	80009	283-5004-00
A21C562	283-5004-00			CAP,FXD,CER DI:0.1UF,10%,25V	80009	283-5004-00
A21C583	290-5002-00			CAP,FXD,ELCTLT:10UF,20V	TK1424	20MC100M-TER
A21CR284	152-5004-00			DIODE,SIG:,ULTRA FAST;70V,0.15A,6NS,SER-PAI R;BAV99,SOT-23,8MM TR	25088	BAV99T
A21CR363	152-5004-00			DIODE,SIG:,ULTRA FAST;70V,0.15A,6NS,SER-PAI R;BAV99,SOT-23,8MM TR	25088	BAV99T
A21CR364	152-5004-00			DIODE,SIG:,ULTRA FAST;70V,0.15A,6NS,SER-PAI R;BAV99,SOT-23,8MM TR	25088	BAV99T
A21CR370	152-5004-00			DIODE,SIG:,ULTRA FAST;70V,0.15A,6NS,SER-PAI R;BAV99,SOT-23,8MM TR	25088	BAV99T
A21CR490	152-5004-00			DIODE,SIG:,ULTRA FAST;70V,0.15A,6NS,SER-PAI R;BAV99,SOT-23,8MM TR	25088	BAV99T
A21CR491	152-5004-00			DIODE,SIG:,ULTRA FAST;70V,0.15A,6NS,SER-PAI R;BAV99,SOT-23,8MM TR	25088	BAV99T
A21H310	119-2265-00			OVEN,CRYSTAL:5W,5VDC	12020	T05P-15-70
A21J110	131-0938-00			CONN,RF JACK::SMB/PNL,;MALE,STR,50 OHM,0.25 HEX,2.0 L 0.025 DIA TAIL,10-32 THD,REAR MT	24931	32JR125-1
A21J130	131-0938-00			CONN,RF JACK::SMB/PNL,;MALE,STR,50 OHM,0.25 HEX,2.0 L 0.025 DIA TAIL,10-32 THD,REAR MT	24931	32JR125-1
A21J140	131-0938-00			CONN,RF JACK::SMB/PNL,;MALE,STR,50 OHM,0.25 HEX,2.0 L 0.025 DIA TAIL,10-32 THD,REAR MT	24931	32JR125-1
A21J180	131-0938-00			CONN,RF JACK::SMB/PNL,;MALE,STR,50 OHM,0.25 HEX,2.0 L 0.025 DIA TAIL,10-32 THD,REAR MT	24931	32JR125-1
A21J290	131-2221-00			CONN,HDR:PCB;,MALE,RTANG,2 X 25,0.1 CTR,0.3 18 MLG X 0.110 TAIL,30 GOLD;,,	22526	65626-150
A21L230	108-5031-00			COIL,RF:	02113	1008CT-200-5
A21Q213	151-5011-00			TRANSISTOR,SIG:BIPOLAR,NPN;12V,50MA,900MHZ, AMPLIFIER;MMBR5179L,TO-236/SOT-23,8MM T&R	80009	151-5011-00
A21Q276	151-5011-00			TRANSISTOR,SIG:BIPOLAR,NPN;12V,50MA,900MHZ, AMPLIFIER;MMBR5179L,TO-236/SOT-23,8MM T&R	80009	151-5011-00
A21Q277	151-5011-00			TRANSISTOR,SIG:BIPOLAR,NPN;12V,50MA,900MHZ, AMPLIFIER;MMBR5179L,TO-236/SOT-23,8MM T&R	80009	151-5011-00
A21Q286	151-5000-00			TRANSISTOR,SIG:BIPOLAR,PNP;40V,200MA,250MHZ ,AMPLIFIER;MMBT3906L,TO-236/SOT-23,8MM T&R	04713	MMBT3906LT1
A21Q320	151-5011-00			TRANSISTOR,SIG:BIPOLAR,NPN;12V,50MA,900MHZ, AMPLIFIER;MMBR5179L,TO-236/SOT-23,8MM T&R	80009	151-5011-00
A21Q362	151-5000-00			TRANSISTOR,SIG:BIPOLAR,PNP;40V,200MA,250MHZ ,AMPLIFIER;MMBT3906L,TO-236/SOT-23,8MM T&R	04713	MMBT3906LT1
A21Q450	151-5001-00			TRANSISTOR,SIG:BIPOLAR,NPN;40V,200MA,300MHZ ,AMPLIFIER;MMBT3904L,TO-236/SOT-23,8MM T&R	80009	151-5001-00

Component No.	Tektronix Part No.	Serial/Assembly No. Effective	Dscont	Name & Description	Mfr. Code	Mfr. Part No.
A21Q451	151-5001-00			TRANSISTOR,SIG:BIPOLAR,NPN;40V,200MA,300MHZ ,AMPLIFIER;MMBT3904L,TO-236/SOT-23,8MM T&R	80009	151-5001-00
A21Q552	151-5000-00			TRANSISTOR,SIG:BIPOLAR,PNP;40V,200MA,250MHZ ,AMPLIFIER;MMBT3906L,TO-236/SOT-23,8MM T&R	04713	MMBT3906LT1
A21Q570	151-5001-00			TRANSISTOR,SIG:BIPOLAR,NPN;40V,200MA,300MHZ ,AMPLIFIER;MMBT3904L,TO-236/SOT-23,8MM T&R	80009	151-5001-00
A21Q580	151-5004-00			TRANSISTOR,SIG:BIPOLAR,NPN;20V,1.0A,65MHZ,A MPLIFIER;BCX68/BC868,SOT-89,12MM T/R	04713	BCX68
A21R111	321-5025-00			RES,FXD:METAL FILM;3.92K OHM,1%,0.125W,TC=1 00 PPM;1206,T&R	80009	321-5025-00
A21R142	321-5051-00			RES,FXD:METAL FILM;0 OHM,1%,0.125W,TC=100 P PM;1206,T&R	80009	321-5051-00
A21R170	311-1237-00			RES,VAR,NONWW:1K OHM,10%,0.50W	80009	311-1237-00
A21R210	321-5043-00			RES,FXD:METAL FILM;47.5 OHM,1%,0.125W,TC=10 0 PPM;1206,T&R	80009	321-5043-00
A21R211	321-5025-00			RES,FXD:METAL FILM;3.92K OHM,1%,0.125W,TC=1 00 PPM;1206,T&R	80009	321-5025-00
A21R212	321-5018-00			RES,FXD:METAL FILM;1.0K OHM,1%,0.125W,TC=10 0 PPM;1206,T&R	80009	321-5018-00
A21R221	321-5006-00			RES,FXD:METAL FILM;100 OHM,1%,0.125W,TC=100 PPM;1206,T&R	80009	321-5006-00
A21R223	321-5043-00			RES,FXD:METAL FILM;47.5 OHM,1%,0.125W,TC=10 0 PPM;1206,T&R	80009	321-5043-00
A21R240	321-5044-00			RES,FXD:METAL FILM;56.2 OHM,1%,0.125W,TC=10 0 PPM;1206,T&R	01121	BCD56R2FT
A21R241	321-5014-00			RES,FXD:METAL FILM;475 OHM,1%,0.125W,TC=100 PPM;1206,T&R	80009	321-5014-00
A21R242	321-5044-00			RES,FXD:METAL FILM;56.2 OHM,1%,0.125W,TC=10 0 PPM;1206,T&R	01121	BCD56R2FT
A21R243	321-5014-00			RES,FXD:METAL FILM;475 OHM,1%,0.125W,TC=100 PPM;1206,T&R	80009	321-5014-00
A21R251	321-5044-00			RES,FXD:METAL FILM;56.2 OHM,1%,0.125W,TC=10 0 PPM;1206,T&R	01121	BCD56R2FT
A21R252	321-5008-00			RES,FXD:METAL FILM;150 OHM,1%,0.125W,TC=100 PPM;1206,T&R	80009	321-5008-00
A21R253	321-5044-00			RES,FXD:METAL FILM;56.2 OHM,1%,0.125W,TC=10 0 PPM;1206,T&R	01121	BCD56R2FT
A21R254	321-5014-00			RES,FXD:METAL FILM;475 OHM,1%,0.125W,TC=100 PPM;1206,T&R	80009	321-5014-00
A21R260	321-5025-00			RES,FXD:METAL FILM;3.92K OHM,1%,0.125W,TC=1 00 PPM;1206,T&R	80009	321-5025-00
A21R262	321-5004-00			RES,FXD:METAL FILM;22.1 OHM,1%,0.125W,TC=10 0 PPM;1206,T&R	80009	321-5004-00
A21R270	321-5018-00			RES,FXD:METAL FILM;1.0K OHM,1%,0.125W,TC=10 0 PPM;1206,T&R	80009	321-5018-00
A21R271	321-5008-00			RES,FXD:METAL FILM;150 OHM,1%,0.125W,TC=100 PPM;1206,T&R	80009	321-5008-00
A21R273	321-5044-00			RES,FXD:METAL FILM;56.2 OHM,1%,0.125W,TC=10 0 PPM;1206,T&R	01121	BCD56R2FT
A21R274	321-5044-00			RES,FXD:METAL FILM;56.2 OHM,1%,0.125W,TC=10 0 PPM;1206,T&R	01121	BCD56R2FT
A21R275	321-5018-00			RES,FXD:METAL FILM;1.0K OHM,1%,0.125W,TC=10 0 PPM;1206,T&R	80009	321-5018-00
A21R278	321-5006-00			RES,FXD:METAL FILM;100 OHM,1%,0.125W,TC=100 PPM;1206,T&R	80009	321-5006-00
A21R279	321-5004-00			RES,FXD:METAL FILM;22.1 OHM,1%,0.125W,TC=10 0 PPM;1206,T&R	80009	321-5004-00
A21R281	321-5007-00			RES,FXD:METAL FILM;121 OHM,1%,0.125W,TC=100 PPM;1206,T&R	80009	321-5007-00

Component No.	Tektronix Part No.	Serial/Assembly No. Effective	Dscont	Name & Description	Mfr. Code	Mfr. Part No.
A21R282	321-5045-00			RES,FXD:METAL FILM;68.1 OHM,1%,0.125W,TC=100 PPM;1206,T&R	80009	321-5045-00
A21R283	321-5045-00			RES,FXD:METAL FILM;68.1 OHM,1%,0.125W,TC=100 PPM;1206,T&R	80009	321-5045-00
A21R285	321-5014-00			RES,FXD:METAL FILM;475 OHM,1%,0.125W,TC=100 PPM;1206,T&R	80009	321-5014-00
A21R288	321-5014-00			RES,FXD:METAL FILM;475 OHM,1%,0.125W,TC=100 PPM;1206,T&R	80009	321-5014-00
A21R321	321-5020-00			RES,FXD:METAL FILM;1.5K OHM,1%,0.125W,TC=100 PPM;1206,T&R	80009	321-5020-00
A21R330	321-5010-00			RES,FXD:METAL FILM;221 OHM,1%,0.125W,TC=100 PPM;1206,T&R	80009	321-5010-00
A21R332	321-5004-00			RES,FXD:METAL FILM;22.1 OHM,1%,0.125W,TC=100 PPM;1206,T&R	80009	321-5004-00
A21R350	321-5006-00			RES,FXD:METAL FILM;100 OHM,1%,0.125W,TC=100 PPM;1206,T&R	80009	321-5006-00
A21R351	321-5014-00			RES,FXD:METAL FILM;475 OHM,1%,0.125W,TC=100 PPM;1206,T&R	80009	321-5014-00
A21R352	321-5010-00			RES,FXD:METAL FILM;221 OHM,1%,0.125W,TC=100 PPM;1206,T&R	80009	321-5010-00
A21R364	321-5010-00			RES,FXD:METAL FILM;221 OHM,1%,0.125W,TC=100 PPM;1206,T&R	80009	321-5010-00
A21R365	321-5010-00			RES,FXD:METAL FILM;221 OHM,1%,0.125W,TC=100 PPM;1206,T&R	80009	321-5010-00
A21R372	321-5033-00			RES,FXD:METAL FILM;18.2K OHM,1%,0.125W,TC=100 PPM;1206,T&R	80009	321-5033-00
A21R373	321-5030-00			RES,FXD:METAL FILM;10.0K OHM,1%,0.125W,TC=100 PPM;1206,T&R	80009	321-5030-00
A21R381	321-5018-00			RES,FXD:METAL FILM;1.0K OHM,1%,0.125W,TC=100 PPM;1206,T&R	80009	321-5018-00
A21R382	321-5018-00			RES,FXD:METAL FILM;1.0K OHM,1%,0.125W,TC=100 PPM;1206,T&R	80009	321-5018-00
A21R420	307-5016-00			RES NTWK,FXD,FI:10K OHM,2%,0.125W	91637	SOMC-1601-103G
A21R452	321-5030-00			RES,FXD:METAL FILM;10.0K OHM,1%,0.125W,TC=100 PPM;1206,T&R	80009	321-5030-00
A21R453	321-5030-00			RES,FXD:METAL FILM;10.0K OHM,1%,0.125W,TC=100 PPM;1206,T&R	80009	321-5030-00
A21R461	321-5000-00			RES,FXD:METAL FILM;10 OHM,1%,0.125W,TC=100 PPM;1206,T&R	57668	MCR18EZHFW10E
A21R472	321-5018-00			RES,FXD:METAL FILM;1.0K OHM,1%,0.125W,TC=100 PPM;1206,T&R	80009	321-5018-00
A21R473	321-5030-00			RES,FXD:METAL FILM;10.0K OHM,1%,0.125W,TC=100 PPM;1206,T&R	80009	321-5030-00
A21R481	321-5042-00			RES,FXD:METAL FILM;39.2 OHM,1%,0.125W,TC=100 PPM;1206,T&R	80009	321-5042-00
A21R482	321-5042-00			RES,FXD:METAL FILM;39.2 OHM,1%,0.125W,TC=100 PPM;1206,T&R	80009	321-5042-00
A21R530	321-5018-00			RES,FXD:METAL FILM;1.0K OHM,1%,0.125W,TC=100 PPM;1206,T&R	80009	321-5018-00
A21R540	321-5047-00			RES,FXD:METAL FILM;100K OHM,1%,0.125W,TC=100 PPM;1206,T&R	80009	321-5047-00
A21R541	321-5018-00			RES,FXD:METAL FILM;1.0K OHM,1%,0.125W,TC=100 PPM;1206,T&R	80009	321-5018-00
A21R542	321-5018-00			RES,FXD:METAL FILM;1.0K OHM,1%,0.125W,TC=100 PPM;1206,T&R	80009	321-5018-00
A21R543	321-5047-00			RES,FXD:METAL FILM;100K OHM,1%,0.125W,TC=100 PPM;1206,T&R	80009	321-5047-00
A21R544	321-5047-00			RES,FXD:METAL FILM;100K OHM,1%,0.125W,TC=100 PPM;1206,T&R	80009	321-5047-00

Component No.	Tektronix Part No.	Serial/Assembly No. Effective	Dscont	Name & Description	Mfr. Code	Mfr. Part No.
A21R545	321-5018-00			RES,FXD:METAL FILM;1.0K OHM,1%,0.125W,TC=100 PPM;1206,T&R	80009	321-5018-00
A21R550	321-5030-00			RES,FXD:METAL FILM;10.0K OHM,1%,0.125W,TC=100 PPM;1206,T&R	80009	321-5030-00
A21R551	321-5018-00			RES,FXD:METAL FILM;1.0K OHM,1%,0.125W,TC=100 PPM;1206,T&R	80009	321-5018-00
A21R561	321-5028-00			RES,FXD:METAL FILM;6.81K OHM,1%,0.125W,TC=100 PPM;1206,T&R	80009	321-5028-00
A21R563	321-5000-00			RES,FXD:METAL FILM;10 OHM,1%,0.125W,TC=100 PPM;1206,T&R	57668	MCR18EZHFW10E
A21R564	321-5034-00			RES,FXD:METAL FILM;22.1K OHM,1%,0.125W,TC=100 PPM;1206,T&R	80009	321-5034-00
A21R565	321-5030-00			RES,FXD:METAL FILM;10.0K OHM,1%,0.125W,TC=100 PPM;1206,T&R	80009	321-5030-00
A21R566	321-5034-00			RES,FXD:METAL FILM;22.1K OHM,1%,0.125W,TC=100 PPM;1206,T&R	80009	321-5034-00
A21R571	321-5035-00			RES,FXD:METAL FILM;27.4K OHM,1%,0.125W,TC=100 PPM;1206,T&R	80009	321-5035-00
A21R572	321-5030-00			RES,FXD:METAL FILM;10.0K OHM,1%,0.125W,TC=100 PPM;1206,T&R	80009	321-5030-00
A21R573	321-5000-00			RES,FXD:METAL FILM;10 OHM,1%,0.125W,TC=100 PPM;1206,T&R	57668	MCR18EZHFW10E
A21R574	321-5000-00			RES,FXD:METAL FILM;10 OHM,1%,0.125W,TC=100 PPM;1206,T&R	57668	MCR18EZHFW10E
A21R581	321-5000-00			RES,FXD:METAL FILM;10 OHM,1%,0.125W,TC=100 PPM;1206,T&R	57668	MCR18EZHFW10E
A21R582	321-5000-00			RES,FXD:METAL FILM;10 OHM,1%,0.125W,TC=100 PPM;1206,T&R	57668	MCR18EZHFW10E
A21SW410	260-1721-00			SWITCH,ROCKER:8,SPST,125MA,30VDC	81073	76SB08S
A21U340	156-5279-00			IC,DIGITAL:ECL,GATE;QUAD 2-INPUT AND;10104, SO16.150,TUBE	80009	156-5279-00
A21U380	156-5018-00			IC,LINEAR:BIPOLAR,OP-AMP;DUAL,SINGLE SUPPLY ;LM358D,SO8.150,TUBE	80009	156-5018-00
A21U430	156-5080-00			IC,DIGITAL:CMOS,REGISTER;8-STAGE STATIC SHIFT REGISTER;4021B,SO16.150,TUBE	80009	156-5080-00
A21U440	156-5021-01			IC,DIGITAL:CMOS,REGISTER;8-STAGE SHIFT/STORAGE, 3-STATE;4094,SO16.150,16MM T&R	80009	156-5021-01
A21U470	156-5298-00			IC,LINEAR:BIPOLAR,VOLTAGE REGULATOR;POSITIVE,5V,100MA,5%;MC78L05ACD,SO8.150,TUBE	80009	156-5298-00
A21U560	156-5018-00			IC,LINEAR:BIPOLAR,OP-AMP;DUAL,SINGLE SUPPLY ;LM358D,SO8.150,TUBE	80009	156-5018-00
A21Y310	158-0340-00			XTAL UNIT,QTZ:100.000MHZ,0.0005%	80009	158-0340-00
A24				(OPTION 04 ONLY)		
A24	119-3889-00	B010100	B010344	TRACK GEN ASSY:ISO AMP,RF AMP,TG PHASE LL,TG INTERFACE	80009	119-3889-00
A24	119-3889-06	B041400		TRACKING GEN AS:ISO AMP,RF AMP,TG PHASE LL, TG INTERFACE	80009	119-3889-01
A24C100	281-0825-00			CAP,FXD,CER DI:0.005UF,+100-0%,100V	33095	51-726-008
A24C110	281-0825-00			CAP,FXD,CER DI:0.005UF,+100-0%,100V	33095	51-726-008
A24C111	281-0825-00			CAP,FXD,CER DI:0.005UF,+100-0%,100V	33095	51-726-008
A24C120	281-0825-00			CAP,FXD,CER DI:0.005UF,+100-0%,100V	33095	51-726-008
A24C130	281-0825-00			CAP,FXD,CER DI:0.005UF,+100-0%,100V	33095	51-726-008
A24C132	281-0825-00			CAP,FXD,CER DI:0.005UF,+100-0%,100V	33095	51-726-008
A24C134	281-0825-00			CAP,FXD,CER DI:0.005UF,+100-0%,100V	33095	51-726-008
A24C136	281-0825-00			CAP,FXD,CER DI:0.005UF,+100-0%,100V	33095	51-726-008
A24C137	281-0825-00			CAP,FXD,CER DI:0.005UF,+100-0%,100V	33095	51-726-008
A24C138	281-0825-00			CAP,FXD,CER DI:0.005UF,+100-0%,100V	33095	51-726-008
A24C214	281-0825-00			CAP,FXD,CER DI:0.005UF,+100-0%,100V	33095	51-726-008
A24C233	281-0825-00			CAP,FXD,CER DI:0.005UF,+100-0%,100V	33095	51-726-008

Component No.	Tektronix Part No.	Serial/Assembly No. Effective	Dscont	Name & Description	Mfr. Code	Mfr. Part No.
A24C236	281-0825-00			CAP,FXD,CER DI:0.005UF,+100-0%,100V	33095	51-726-008
A24C237	281-0825-00			CAP,FXD,CER DI:0.005UF,+100-0%,100V	33095	51-726-008
A24C240	281-0825-00			CAP,FXD,CER DI:0.005UF,+100-0%,100V	33095	51-726-008
A24C312	281-0825-00			CAP,FXD,CER DI:0.005UF,+100-0%,100V	33095	51-726-008
A24C322	281-0825-00			CAP,FXD,CER DI:0.005UF,+100-0%,100V	33095	51-726-008
A24C331	281-0825-00			CAP,FXD,CER DI:0.005UF,+100-0%,100V	33095	51-726-008
A24C440	281-0825-00			CAP,FXD,CER DI:0.005UF,+100-0%,100V	33095	51-726-008
A24C501	281-0875-00			CAP,FXD,CER DI:100PF,20%,200V	72982	2425001X5U101M
A24FL1	389-0742-01			CIRCUIT BOARD:LOW PASS FILTER	80009	389-0742-01
A24A1	671-1547-01	B041400		CIRCUIT BD ASSY:TG INTERFACE	80009	671-1547-01
A24A1C131	290-5002-00			CAP,FXD,ELCTLT:10UF,20V	TK1424	20MC100M-TER
A24A1C133	283-5004-00			CAP,FXD,CER DI:0.1UF,10%,25V	80009	283-5004-00
A24A1C135	283-5004-00			CAP,FXD,CER DI:0.1UF,10%,25V	80009	283-5004-00
A24A1C200	283-5004-00			CAP,FXD,CER DI:0.1UF,10%,25V	80009	283-5004-00
A24A1C201	283-5014-00			CAP,FXD,CER DI:330PF,5%,50V	80009	283-5014-00
A24A1C210	283-5004-00			CAP,FXD,CER DI:0.1UF,10%,25V	80009	283-5004-00
A24A1C211	283-5014-00			CAP,FXD,CER DI:330PF,5%,50V	80009	283-5014-00
A24A1C212	283-5004-00			CAP,FXD,CER DI:0.1UF,10%,25V	80009	283-5004-00
A24A1C221	283-5004-00			CAP,FXD,CER DI:0.1UF,10%,25V	80009	283-5004-00
A24A1C230	283-5004-00			CAP,FXD,CER DI:0.1UF,10%,25V	80009	283-5004-00
A24A1C231	283-5004-00			CAP,FXD,CER DI:0.1UF,10%,25V	80009	283-5004-00
A24A1C232	283-5001-00			CAP,FXD,CER DI:100PF,5%,50V	80009	283-5001-00
A24A1C234	283-5004-00			CAP,FXD,CER DI:0.1UF,10%,25V	80009	283-5004-00
A24A1C235	283-5001-00			CAP,FXD,CER DI:100PF,5%,50V	80009	283-5001-00
A24A1C236	283-5004-00			CAP,FXD,CER DI:0.1UF,10%,25V	80009	283-5004-00
A24A1C300	283-5004-00			CAP,FXD,CER DI:0.1UF,10%,25V	80009	283-5004-00
A24A1C302	283-5004-00			CAP,FXD,CER DI:0.1UF,10%,25V	80009	283-5004-00
A24A1C303	283-5004-00			CAP,FXD,CER DI:0.1UF,10%,25V	80009	283-5004-00
A24A1C304	290-5002-00			CAP,FXD,ELCTLT:10UF,20V	TK1424	20MC100M-TER
A24A1C305	283-5112-00			CAP,FXD,CER DI:0.33UF,10%,25V	80009	283-5112-00
A24A1C306	283-5004-00			CAP,FXD,CER DI:0.1UF,10%,25V	80009	283-5004-00
A24A1C307	290-5002-00			CAP,FXD,ELCTLT:10UF,20V	TK1424	20MC100M-TER
A24A1C308	283-5004-00			CAP,FXD,CER DI:0.1UF,10%,25V	80009	283-5004-00
A24A1C320	283-5112-00			CAP,FXD,CER DI:0.33UF,10%,25V	80009	283-5112-00
A24A1C321	290-5002-00			CAP,FXD,ELCTLT:10UF,20V	TK1424	20MC100M-TER
A24A1C322	290-5002-00			CAP,FXD,ELCTLT:10UF,20V	TK1424	20MC100M-TER
A24A1C323	283-5112-00			CAP,FXD,CER DI:0.33UF,10%,25V	80009	283-5112-00
A24A1C324	283-5004-00			CAP,FXD,CER DI:0.1UF,10%,25V	80009	283-5004-00
A24A1C325	283-5112-00			CAP,FXD,CER DI:0.33UF,10%,25V	80009	283-5112-00
A24A1C326	290-5002-00			CAP,FXD,ELCTLT:10UF,20V	TK1424	20MC100M-TER
A24A1C327	283-5004-00			CAP,FXD,CER DI:0.1UF,10%,25V	80009	283-5004-00
A24A1C328	283-5004-00			CAP,FXD,CER DI:0.1UF,10%,25V	80009	283-5004-00
A24A1CR300	152-5004-00			DIODE,SIG:,ULTRA FAST;70V,0.15A,6NS,SER-PAI R;BAV99,SOT-23,8MM TR	25088	BAV99T
A24A1CR323	152-5004-00			DIODE,SIG:,ULTRA FAST;70V,0.15A,6NS,SER-PAI R;BAV99,SOT-23,8MM TR	25088	BAV99T
A24A1J300	131-3718-00		B031399	CONN,HDR:	80009	131-3718-00
A24A1J300	174-3730-00	B041400				
A24A1L130	108-5009-00			COIL,RF:FXD,82UH, +/- 10 %, Q=50, SRF 10 MH Z, DCR 7.0 OHM	80009	108-5009-00
A24A1Q130	151-5000-00			TRANSISTOR,SIG:BIPOLAR,PNP;40V,200MA,250MHZ ,AMPLIFIER;MMBT3906L,TO-236/SOT-23,8MM T&R	04713	MMBT3906LT1
A24A1Q131	151-5000-00			TRANSISTOR,SIG:BIPOLAR,PNP;40V,200MA,250MHZ ,AMPLIFIER;MMBT3906L,TO-236/SOT-23,8MM T&R	04713	MMBT3906LT1
A24A1Q132	151-5000-00			TRANSISTOR,SIG:BIPOLAR,PNP;40V,200MA,250MHZ ,AMPLIFIER;MMBT3906L,TO-236/SOT-23,8MM T&R	04713	MMBT3906LT1
A24A1Q133	151-5000-00			TRANSISTOR,SIG:BIPOLAR,PNP;40V,200MA,250MHZ ,AMPLIFIER;MMBT3906L,TO-236/SOT-23,8MM T&R	04713	MMBT3906LT1
A24A1Q134	151-5000-00			TRANSISTOR,SIG:BIPOLAR,PNP;40V,200MA,250MHZ ,AMPLIFIER;MMBT3906L,TO-236/SOT-23,8MM T&R	04713	MMBT3906LT1

Component No.	Tektronix Part No.	Serial/Assembly No. Effective	Dscont	Name & Description	Mfr. Code	Mfr. Part No.
A24A1Q135	151-5000-00			TRANSISTOR,SIG:BIPOLAR,PNP;40V,200MA,250MHZ ,AMPLIFIER;MMBT3906L,TO-236/SOT-23,8MM T&R	04713	MMBT3906LT1
A24A1Q200	151-5000-00			TRANSISTOR,SIG:BIPOLAR,PNP;40V,200MA,250MHZ ,AMPLIFIER;MMBT3906L,TO-236/SOT-23,8MM T&R	04713	MMBT3906LT1
A24A1Q201	151-5002-00			TRANSISTOR,SIG:JFET,N-CH;5V,75MA,60 OHM,SWI TCH;MMBF4392L,SOT-23,8MM T&R	80009	151-5002-00
A24A1Q220	151-5000-00			TRANSISTOR,SIG:BIPOLAR,PNP;40V,200MA,250MHZ ,AMPLIFIER;MMBT3906L,TO-236/SOT-23,8MM T&R	04713	MMBT3906LT1
A24A1Q221	151-5001-00			TRANSISTOR,SIG:BIPOLAR,NPN;40V,200MA,300MHZ ,AMPLIFIER;MMBT3904L,TO-236/SOT-23,8MM T&R	80009	151-5001-00
A24A1Q310	151-1127-00			TRANSISTOR,PWR:MOS,N-CH;60V,4.0A,0.6 OHM;IR F511,TO-220	81483	IRF511
A24A1Q320	151-1128-00			TRANSISTOR,PWR:MOS,P-CH;60V,6.0A,0.6 OHM;IR F9521,TO-220	80009	151-1128-00
A24A1Q321	151-1127-00			TRANSISTOR,PWR:MOS,N-CH;60V,4.0A,0.6 OHM;IR F511,TO-220	81483	IRF511
A24A1Q322	151-1128-00			TRANSISTOR,PWR:MOS,P-CH;60V,6.0A,0.6 OHM;IR F9521,TO-220	80009	151-1128-00
A24A1R130	321-5026-00			RES,FXD:METAL FILM;4.75K OHM,1%,0.125W,TC=1 00 PPM;1206,T&R	80009	321-5026-00
A24A1R131	321-5026-00			RES,FXD:METAL FILM;4.75K OHM,1%,0.125W,TC=1 00 PPM;1206,T&R	80009	321-5026-00
A24A1R132	321-5026-00			RES,FXD:METAL FILM;4.75K OHM,1%,0.125W,TC=1 00 PPM;1206,T&R	80009	321-5026-00
A24A1R133	321-5026-00			RES,FXD:METAL FILM;4.75K OHM,1%,0.125W,TC=1 00 PPM;1206,T&R	80009	321-5026-00
A24A1R134	321-5026-00			RES,FXD:METAL FILM;4.75K OHM,1%,0.125W,TC=1 00 PPM;1206,T&R	80009	321-5026-00
A24A1R135	321-5002-00			RES,FXD:METAL FILM;15 OHM,1%,0.125W,TC=100 PPM;1206,T&R	57668	MCR18EZHFW 15E0
A24A1R136	321-5026-00			RES,FXD:METAL FILM;4.75K OHM,1%,0.125W,TC=1 00 PPM;1206,T&R	80009	321-5026-00
A24A1R137	321-5018-00			RES,FXD:METAL FILM;1.0K OHM,1%,0.125W,TC=10 0 PPM;1206,T&R	80009	321-5018-00
A24A1R138	321-5006-00			RES,FXD:METAL FILM;100 OHM,1%,0.125W,TC=100 PPM;1206,T&R	80009	321-5006-00
A24A1R139	321-5006-00			RES,FXD:METAL FILM;100 OHM,1%,0.125W,TC=100 PPM;1206,T&R	80009	321-5006-00
A24A1R140	321-5030-00			RES,FXD:METAL FILM;10.0K OHM,1%,0.125W,TC=1 00 PPM;1206,T&R	80009	321-5030-00
A24A1R141	321-5027-00			RES,FXD:METAL FILM;5.62K OHM,1%,0.125W,TC=1 00 PPM;1206,T&R	80009	321-5027-00
A24A1R142	321-5023-00			RES,FXD:METAL FILM;2.74K OHM,1%,0.125W,TC=1 00 PPM;1206,T&R	80009	321-5023-00
A24A1R200	321-5018-00			RES,FXD:METAL FILM;1.0K OHM,1%,0.125W,TC=10 0 PPM;1206,T&R	80009	321-5018-00
A24A1R201	321-5036-00			RES,FXD:METAL FILM;33.2K OHM,1%,0.125W,TC=1 00 PPM;1206,T&R	80009	321-5036-00
A24A1R202	321-5041-00			RES,FXD:METAL FILM;82.5K OHM,1%,0.125W,TC=1 00 PPM;1206,T&R	80009	321-5041-00
A24A1R203	311-5038-00			RES,VAR,TRMR:CERMET;20K OHM,25%,0.25W,4MM S Q,TOP ADJ;SMD,T&R	80009	311-5038-00
A24A1R204	321-5006-00			RES,FXD:METAL FILM;100 OHM,1%,0.125W,TC=100 PPM;1206,T&R	80009	321-5006-00
A24A1R205	321-5047-00			RES,FXD:METAL FILM;100K OHM,1%,0.125W,TC=10 0 PPM;1206,T&R	80009	321-5047-00
A24A1R206	321-5029-00			RES,FXD:METAL FILM;8.25K OHM,1%,0.125W,TC=1 00 PPM;1206,T&R	80009	321-5029-00

Component No.	Tektronix Part No.	Serial/Assembly No. Effective	Dscont	Name & Description	Mfr. Code	Mfr. Part No.
A24A1R207	321-5030-00			RES,FXD:METAL FILM;10.0K OHM,1%,0.125W,TC=100 PPM;1206,T&R	80009	321-5030-00
A24A1R208	321-5027-00			RES,FXD:METAL FILM;5.62K OHM,1%,0.125W,TC=100 PPM;1206,T&R	80009	321-5027-00
A24A1R210	321-5030-00			RES,FXD:METAL FILM;10.0K OHM,1%,0.125W,TC=100 PPM;1206,T&R	80009	321-5030-00
A24A1R211	321-5030-00			RES,FXD:METAL FILM;10.0K OHM,1%,0.125W,TC=100 PPM;1206,T&R	80009	321-5030-00
A24A1R212	321-5030-00			RES,FXD:METAL FILM;10.0K OHM,1%,0.125W,TC=100 PPM;1206,T&R	80009	321-5030-00
A24A1R213	321-5034-00			RES,FXD:METAL FILM;22.1K OHM,1%,0.125W,TC=100 PPM;1206,T&R	80009	321-5034-00
A24A1R214	311-5038-00			RES,VAR,TRMR:CERMET;20K OHM,25%,0.25W,4MM SQ,TOP ADJ;SMD,T&R	80009	311-5038-00
A24A1R215	321-5030-00			RES,FXD:METAL FILM;10.0K OHM,1%,0.125W,TC=100 PPM;1206,T&R	80009	321-5030-00
A24A1R220	321-5047-00			RES,FXD:METAL FILM;100K OHM,1%,0.125W,TC=100 PPM;1206,T&R	80009	321-5047-00
A24A1R221	321-5030-00			RES,FXD:METAL FILM;10.0K OHM,1%,0.125W,TC=100 PPM;1206,T&R	80009	321-5030-00
A24A1R222	321-5030-00			RES,FXD:METAL FILM;10.0K OHM,1%,0.125W,TC=100 PPM;1206,T&R	80009	321-5030-00
A24A1R223	321-5049-00			RES,FXD:METAL FILM;1M OHM,1%,0.125W,TC=100 PPM;1206,T&R	80009	321-5049-00
A24A1R230	321-5035-00			RES,FXD:METAL FILM;27.4K OHM,1%,0.125W,TC=100 PPM;1206,T&R	80009	321-5035-00
A24A1R231	321-5041-00			RES,FXD:METAL FILM;82.5K OHM,1%,0.125W,TC=100 PPM;1206,T&R	80009	321-5041-00
A24A1R232	321-5006-00			RES,FXD:METAL FILM;100 OHM,1%,0.125W,TC=100 PPM;1206,T&R	80009	321-5006-00
A24A1R233	321-5047-00			RES,FXD:METAL FILM;100K OHM,1%,0.125W,TC=100 PPM;1206,T&R	80009	321-5047-00
A24A1R234	321-5006-00			RES,FXD:METAL FILM;100 OHM,1%,0.125W,TC=100 PPM;1206,T&R	80009	321-5006-00
A24A1R235	321-5006-00			RES,FXD:METAL FILM;100 OHM,1%,0.125W,TC=100 PPM;1206,T&R	80009	321-5006-00
A24A1R300	321-5012-00			RES,FXD:METAL FILM;332 OHM,1%,0.125W,TC=100 PPM;1206,T&R	80009	321-5012-00
A24A1R301	321-5030-00			RES,FXD:METAL FILM;10.0K OHM,1%,0.125W,TC=100 PPM;1206,T&R	80009	321-5030-00
A24A1R302	321-5018-00			RES,FXD:METAL FILM;1.0K OHM,1%,0.125W,TC=100 PPM;1206,T&R	80009	321-5018-00
A24A1R303	321-5026-00			RES,FXD:METAL FILM;4.75K OHM,1%,0.125W,TC=100 PPM;1206,T&R	80009	321-5026-00
A24A1R304	321-5018-00			RES,FXD:METAL FILM;1.0K OHM,1%,0.125W,TC=100 PPM;1206,T&R	80009	321-5018-00
A24A1R305	321-5006-00			RES,FXD:METAL FILM;100 OHM,1%,0.125W,TC=100 PPM;1206,T&R	80009	321-5006-00
A24A1R306	321-5023-00			RES,FXD:METAL FILM;2.74K OHM,1%,0.125W,TC=100 PPM;1206,T&R	80009	321-5023-00
A24A1R307	321-5006-00			RES,FXD:METAL FILM;100 OHM,1%,0.125W,TC=100 PPM;1206,T&R	80009	321-5006-00
A24A1R309	321-5023-00			RES,FXD:METAL FILM;2.74K OHM,1%,0.125W,TC=100 PPM;1206,T&R	80009	321-5023-00
A24A1R310	321-5006-00			RES,FXD:METAL FILM;100 OHM,1%,0.125W,TC=100 PPM;1206,T&R	80009	321-5006-00
A24A1R311	321-5032-00			RES,FXD:METAL FILM;15.0K OHM,1%,0.125W,TC=100 PPM;1206,T&R	80009	321-5032-00

Component No.	Tektronix Part No.	Serial/Assembly No. Effective	Dscont	Name & Description	Mfr. Code	Mfr. Part No.
A24A1R312	321-5028-00			RES,FXD:METAL FILM;6.81K OHM,1%,0.125W,TC=100 PPM;1206,T&R	80009	321-5028-00
A24A1R313	321-5031-00			RES,FXD:METAL FILM;12.1K OHM,1%,0.125W,TC=100 PPM;1206,T&R	80009	321-5031-00
A24A1R314	321-5033-00			RES,FXD:METAL FILM;18.2K OHM,1%,0.125W,TC=100 PPM;1206,T&R	80009	321-5033-00
A24A1R315	321-5018-00			RES,FXD:METAL FILM;1.0K OHM,1%,0.125W,TC=100 PPM;1206,T&R	80009	321-5018-00
A24A1R316	321-5030-00			RES,FXD:METAL FILM;10.0K OHM,1%,0.125W,TC=100 PPM;1206,T&R	80009	321-5030-00
A24A1R317	321-5038-00			RES,FXD:METAL FILM;47.5K OHM,1%,0.125W,TC=100 PPM;1206,T&R	80009	321-5038-00
A24A1R318	321-5035-00			RES,FXD:METAL FILM;27.4K OHM,1%,0.125W,TC=100 PPM;1206,T&R	80009	321-5035-00
A24A1R319	321-5006-00			RES,FXD:METAL FILM;100 OHM,1%,0.125W,TC=100 PPM;1206,T&R	80009	321-5006-00
A24A1R320	321-5018-00			RES,FXD:METAL FILM;1.0K OHM,1%,0.125W,TC=100 PPM;1206,T&R	80009	321-5018-00
A24A1R321	321-5006-00			RES,FXD:METAL FILM;100 OHM,1%,0.125W,TC=100 PPM;1206,T&R	80009	321-5006-00
A24A1R322	321-5026-00			RES,FXD:METAL FILM;4.75K OHM,1%,0.125W,TC=100 PPM;1206,T&R	80009	321-5026-00
A24A1R323	321-5026-00			RES,FXD:METAL FILM;4.75K OHM,1%,0.125W,TC=100 PPM;1206,T&R	80009	321-5026-00
A24A1R324	321-5006-00			RES,FXD:METAL FILM;100 OHM,1%,0.125W,TC=100 PPM;1206,T&R	80009	321-5006-00
A24A1R325	321-5006-00			RES,FXD:METAL FILM;100 OHM,1%,0.125W,TC=100 PPM;1206,T&R	80009	321-5006-00
A24A1R326	321-5006-00			RES,FXD:METAL FILM;100 OHM,1%,0.125W,TC=100 PPM;1206,T&R	80009	321-5006-00
A24A1R327	321-5034-00			RES,FXD:METAL FILM;22.1K OHM,1%,0.125W,TC=100 PPM;1206,T&R	80009	321-5034-00
A24A1R328	321-5033-00			RES,FXD:METAL FILM;18.2K OHM,1%,0.125W,TC=100 PPM;1206,T&R	80009	321-5033-00
A24A1R329	311-5038-00			RES,VAR,TRMR:CERMET;20K OHM,25%,0.25W,4MM SQ,TOP ADJ;SMD,T&R	80009	311-5038-00
A24A1R330	321-5026-00			RES,FXD:METAL FILM;4.75K OHM,1%,0.125W,TC=100 PPM;1206,T&R	80009	321-5026-00
A24A1R331	321-5018-00			RES,FXD:METAL FILM;1.0K OHM,1%,0.125W,TC=100 PPM;1206,T&R	80009	321-5018-00
A24A1R332	321-5049-00			RES,FXD:METAL FILM;1M OHM,1%,0.125W,TC=100 PPM;1206,T&R	80009	321-5049-00
A24A1R333	321-5018-00			RES,FXD:METAL FILM;1.0K OHM,1%,0.125W,TC=100 PPM;1206,T&R	80009	321-5018-00
A24A1R334	321-5018-00			RES,FXD:METAL FILM;1.0K OHM,1%,0.125W,TC=100 PPM;1206,T&R	80009	321-5018-00
A24A1R335	321-5030-00			RES,FXD:METAL FILM;10.0K OHM,1%,0.125W,TC=100 PPM;1206,T&R	80009	321-5030-00
A24A1R336	321-5018-00			RES,FXD:METAL FILM;1.0K OHM,1%,0.125W,TC=100 PPM;1206,T&R	80009	321-5018-00
A24A1R337	321-5035-00			RES,FXD:METAL FILM;27.4K OHM,1%,0.125W,TC=100 PPM;1206,T&R	80009	321-5035-00
A24A1R338	321-5018-00			RES,FXD:METAL FILM;1.0K OHM,1%,0.125W,TC=100 PPM;1206,T&R	80009	321-5018-00
A24A1R339	321-5006-00			RES,FXD:METAL FILM;100 OHM,1%,0.125W,TC=100 PPM;1206,T&R	80009	321-5006-00
A24A1R340	321-5006-00			RES,FXD:METAL FILM;100 OHM,1%,0.125W,TC=100 PPM;1206,T&R	80009	321-5006-00

Component No.	Tektronix Part No.	Serial/Assembly No. Effective	Dscont	Name & Description	Mfr. Code	Mfr. Part No.
A24A1R341	321-5023-00			RES,FXD:METAL FILM;2.74K OHM,1%,0.125W,TC=100 PPM;1206,T&R	80009	321-5023-00
A24A1R343	321-5030-00			RES,FXD:METAL FILM;10.0K OHM,1%,0.125W,TC=100 PPM;1206,T&R	80009	321-5030-00
A24A1R344	321-5030-00			RES,FXD:METAL FILM;10.0K OHM,1%,0.125W,TC=100 PPM;1206,T&R	80009	321-5030-00
A24A1R345	321-5026-00			RES,FXD:METAL FILM;4.75K OHM,1%,0.125W,TC=100 PPM;1206,T&R	80009	321-5026-00
A24A1R346	321-5026-00			RES,FXD:METAL FILM;4.75K OHM,1%,0.125W,TC=100 PPM;1206,T&R	80009	321-5026-00
A24A1R347	321-5026-00			RES,FXD:METAL FILM;4.75K OHM,1%,0.125W,TC=100 PPM;1206,T&R	80009	321-5026-00
A24A1U130	156-5018-00			IC,LINEAR:BIPOLAR,OP-AMP;DUAL,SINGLE SUPPLY;LM358D,SO8.150,TUBE	80009	156-5018-00
A24A1U201	156-5155-00			IC,DIGITAL:HCMOS,GATE;HEX INV;74HC04,SO14.150,TUBE	80009	156-5155-00
A24A1U202	156-5018-00			IC,LINEAR:BIPOLAR,OP-AMP;DUAL,SINGLE SUPPLY;LM358D,SO8.150,TUBE	80009	156-5018-00
A24A1U204	156-5018-00			IC,LINEAR:BIPOLAR,OP-AMP;DUAL,SINGLE SUPPLY;LM358D,SO8.150,TUBE	80009	156-5018-00
A24A1U210	156-5227-00			IC,DIGITAL:HCMOS,MULTIVIBRATOR;DUAL RETRIG MONOSTABLE, WITH RESET;74HC123,SO16.150	80009	156-5227-00
A24A1U220	156-5021-01			IC,DIGITAL:CMOS,REGISTER;8-STAGE SHIFT/STORAGE, 3-STATE;4094,SO16.150,16MM T&R	80009	156-5021-01
A24A1U221	156-5021-01			IC,DIGITAL:CMOS,REGISTER;8-STAGE SHIFT/STORAGE, 3-STATE;4094,SO16.150,16MM T&R	80009	156-5021-01
A24A1U230	156-5021-01			IC,DIGITAL:CMOS,REGISTER;8-STAGE SHIFT/STORAGE, 3-STATE;4094,SO16.150,16MM T&R	80009	156-5021-01
A24A1U231	156-5300-00			IC,CONVERTER:	80009	156-5300-00
A24A1U232	156-5018-00			IC,LINEAR:BIPOLAR,OP-AMP;DUAL,SINGLE SUPPLY;LM358D,SO8.150,TUBE	80009	156-5018-00
A24A1U234	156-5274-01			IC,MISC:CMOS,ANALOG SWITCH;QUAD;DG211,SO16.150,16MM T&R	80009	156-5274-01
A24A1U310	156-5018-00			IC,LINEAR:BIPOLAR,OP-AMP;DUAL,SINGLE SUPPLY;LM358D,SO8.150,TUBE	80009	156-5018-00
A24A1U320	156-5018-00			IC,LINEAR:BIPOLAR,OP-AMP;DUAL,SINGLE SUPPLY;LM358D,SO8.150,TUBE	80009	156-5018-00
A24A1U321	156-5018-00			IC,LINEAR:BIPOLAR,OP-AMP;DUAL,SINGLE SUPPLY;LM358D,SO8.150,TUBE	80009	156-5018-00
A24A1VR200	152-0526-00			DIODE,ZENER:,;6.35V,1%,0.4W;1N829A FMLY,DO-7	14552	DT840615A
A24A2	671-1544-00			CIRCUIT BD ASSY:TG PHASE LOCK LOOP	80009	671-1544-00
A24A2C100	283-5002-00			CAP,FXD,CER DI:1000PF,10%,50V	80009	283-5002-00
A24A2C101	283-5002-00			CAP,FXD,CER DI:1000PF,10%,50V	80009	283-5002-00
A24A2C110	283-5002-00			CAP,FXD,CER DI:1000PF,10%,50V	80009	283-5002-00
A24A2C120	283-5011-00			CAP,FXD,CER DI:33PF,5%,50V	95275	VJ1206A330JXA
A24A2C122	283-5002-00			CAP,FXD,CER DI:1000PF,10%,50V	80009	283-5002-00
A24A2C125	283-5003-00			CAP,FXD,CER DI:0.01UF,10%,50V	80009	283-5003-00
A24A2C180	283-5005-00			CAP,FXD,CER DI:4PF,+/- 0.25PF,50V	54583	C3216C0G1H040C
A24A2C210	283-5004-00			CAP,FXD,CER DI:0.1UF,10%,25V	80009	283-5004-00
A24A2C220	283-5004-00			CAP,FXD,CER DI:0.1UF,10%,25V	80009	283-5004-00
A24A2C221	283-5004-00			CAP,FXD,CER DI:0.1UF,10%,25V	80009	283-5004-00
A24A2C222	283-5001-00			CAP,FXD,CER DI:100PF,5%,50V	80009	283-5001-00
A24A2C230	283-5004-00			CAP,FXD,CER DI:0.1UF,10%,25V	80009	283-5004-00
A24A2C231	283-5011-00			CAP,FXD,CER DI:33PF,5%,50V	95275	VJ1206A330JXA
A24A2C232	283-5001-00			CAP,FXD,CER DI:100PF,5%,50V	80009	283-5001-00
A24A2C250	283-5005-00			CAP,FXD,CER DI:4PF,+/- 0.25PF,50V	54583	C3216C0G1H040C
A24A2C300	283-5002-00			CAP,FXD,CER DI:1000PF,10%,50V	80009	283-5002-00
A24A2C303	283-5003-00			CAP,FXD,CER DI:0.01UF,10%,50V	80009	283-5003-00

Component No.	Tektronix Part No.	Serial/Assembly No. Effective	Dscont	Name & Description	Mfr. Code	Mfr. Part No.
A24A2C310	283-5004-00			CAP,FXD,CER DI:0.1UF,10%,25V	80009	283-5004-00
A24A2C311	283-5002-00			CAP,FXD,CER DI:1000PF,10%,50V	80009	283-5002-00
A24A2C312	283-5004-00			CAP,FXD,CER DI:0.1UF,10%,25V	80009	283-5004-00
A24A2C313	283-5002-00			CAP,FXD,CER DI:1000PF,10%,50V	80009	283-5002-00
A24A2C314	283-5002-00			CAP,FXD,CER DI:1000PF,10%,50V	80009	283-5002-00
A24A2C330	283-5002-00			CAP,FXD,CER DI:1000PF,10%,50V	80009	283-5002-00
A24A2C360	290-5002-00			CAP,FXD,ELCTLT:10UF,20V	TK1424	20MC100M-TER
A24A2C361	290-5002-00			CAP,FXD,ELCTLT:10UF,20V	TK1424	20MC100M-TER
A24A2C370	283-5005-00			CAP,FXD,CER DI:4PF,+/- 0.25PF,50V	54583	C3216COG1H040C
A24A2C400	283-5004-00			CAP,FXD,CER DI:0.1UF,10%,25V	80009	283-5004-00
A24A2C401	283-5003-00			CAP,FXD,CER DI:0.01UF,10%,50V	80009	283-5003-00
A24A2C410	283-5004-00			CAP,FXD,CER DI:0.1UF,10%,25V	80009	283-5004-00
A24A2C411	283-5002-00			CAP,FXD,CER DI:1000PF,10%,50V	80009	283-5002-00
A24A2C420	281-0283-00			CAP,VAR,CER DI:MULTI-TURN TRIMER;6.5PF-30 P F,100V,TOP-ADJ;SMD,T&R	80009	281-0283-00
A24A2C430	283-5004-00			CAP,FXD,CER DI:0.1UF,10%,25V	80009	283-5004-00
A24A2C431	283-5004-00			CAP,FXD,CER DI:0.1UF,10%,25V	80009	283-5004-00
A24A2C450	283-5004-00			CAP,FXD,CER DI:0.1UF,10%,25V	80009	283-5004-00
A24A2C451	283-5004-00			CAP,FXD,CER DI:0.1UF,10%,25V	80009	283-5004-00
A24A2C452	283-5004-00			CAP,FXD,CER DI:0.1UF,10%,25V	80009	283-5004-00
A24A2C500	283-5004-00			CAP,FXD,CER DI:0.1UF,10%,25V	80009	283-5004-00
A24A2C530	283-5004-00			CAP,FXD,CER DI:0.1UF,10%,25V	80009	283-5004-00
A24A2C531	283-5004-00			CAP,FXD,CER DI:0.1UF,10%,25V	80009	283-5004-00
A24A2C540	283-5004-00			CAP,FXD,CER DI:0.1UF,10%,25V	80009	283-5004-00
A24A2C541	283-5004-00			CAP,FXD,CER DI:0.1UF,10%,25V	80009	283-5004-00
A24A2C550	283-5004-00			CAP,FXD,CER DI:0.1UF,10%,25V	80009	283-5004-00
A24A2C560	290-5002-00			CAP,FXD,ELCTLT:10UF,20V	TK1424	20MC100M-TER
A24A2C561	290-5002-00			CAP,FXD,ELCTLT:10UF,20V	TK1424	20MC100M-TER
A24A2C650	283-5005-00			CAP,FXD,CER DI:4PF,+/- 0.25PF,50V	54583	C3216COG1H040C
A24A2CR270	152-5066-00			DIODE,SIG:,PIN;100V,0.35PF,1.0K OHMS,800NS; HSMP-3800,SOT-23,TR	80009	152-5066-00
A24A2CR340	152-5004-00			DIODE,SIG:,ULTRA FAST;70V,0.15A,6NS,SER-PAI R;BAV99,SOT-23,8MM TR	25088	BAV99T
A24A2CR350	152-5000-00			SEMICOND DVC,DI:SW,SI,70V,COM CATHODE	80009	152-5000-00
A24A2CR351	152-5000-00			SEMICOND DVC,DI:SW,SI,70V,COM CATHODE	80009	152-5000-00
A24A2CR412	152-5004-00			DIODE,SIG:,ULTRA FAST;70V,0.15A,6NS,SER-PAI R;BAV99,SOT-23,8MM TR	25088	BAV99T
A24A2CR440	152-5000-00			SEMICOND DVC,DI:SW,SI,70V,COM CATHODE	80009	152-5000-00
A24A2CR510	152-5057-00			DIODE,SIG:,VVC;30V,2.3PF @ 25V;MMBV105GL,SO T-23,8MM T&R	80009	152-5057-00
A24A2CR540	152-5000-00			SEMICOND DVC,DI:SW,SI,70V,COM CATHODE	80009	152-5000-00
A24A2CR650	152-5004-00			DIODE,SIG:,ULTRA FAST;70V,0.15A,6NS,SER-PAI R;BAV99,SOT-23,8MM TR	25088	BAV99T
A24A2CR651	152-5004-00			DIODE,SIG:,ULTRA FAST;70V,0.15A,6NS,SER-PAI R;BAV99,SOT-23,8MM TR	25088	BAV99T
A24A2L420	108-5005-00			COIL,RF:	80009	108-5005-00
A24A2L421	108-5030-00			COIL,RF:FXD,100NH, +/- 10 %,Q=25,SRF 950 MH Z,DCR 0.56 OHM, I	80009	108-5030-00
A24A2Q120	151-5010-00			TRANSISTOR,SIG:BIPOLAR,NPN;12V,200MA,6.5GHZ ,AMPLIFIER;NE85634/2SC3357,SOT-89,12MM T/R	80009	151-5010-00
A24A2Q260	151-5005-00			TRANSISTOR,SIG:BIPOLAR,PNP;20V,1.0A,60MHZ,A MPLIFIER;BCX69/BC869,SOT-89,12MM T/R	04713	BCX69T1
A24A2Q320	151-5011-00			TRANSISTOR,SIG:BIPOLAR,NPN;12V,50MA,900MHZ, AMPLIFIER;MMBR5179L,TO-236/SOT-23,8MM T&R	80009	151-5011-00
A24A2Q321	151-5011-00			TRANSISTOR,SIG:BIPOLAR,NPN;12V,50MA,900MHZ, AMPLIFIER;MMBR5179L,TO-236/SOT-23,8MM T&R	80009	151-5011-00
A24A2Q350	151-5001-00			TRANSISTOR,SIG:BIPOLAR,NPN;40V,200MA,300MHZ ,AMPLIFIER;MMBT3904L,TO-236/SOT-23,8MM T&R	80009	151-5001-00

Component No.	Tektronix Part No.	Serial/Assembly No. Effective	Dscont	Name & Description	Mfr. Code	Mfr. Part No.
A24A2Q360	151-5004-00			TRANSISTOR,SIG:BIPOLAR,NPN;20V,1.0A,65MHZ,AMPLIFIER;BCX68/BC868,SOT-89,12MM T/R	04713	BCX68
A24A2Q410	151-5011-00			TRANSISTOR,SIG:BIPOLAR,NPN;12V,50MA,900MHZ,AMPLIFIER;MMBR5179L,TO-236/SOT-23,8MM T&R	80009	151-5011-00
A24A2Q411	151-5011-00			TRANSISTOR,SIG:BIPOLAR,NPN;12V,50MA,900MHZ,AMPLIFIER;MMBR5179L,TO-236/SOT-23,8MM T&R	80009	151-5011-00
A24A2Q420	151-5011-00			TRANSISTOR,SIG:BIPOLAR,NPN;12V,50MA,900MHZ,AMPLIFIER;MMBR5179L,TO-236/SOT-23,8MM T&R	80009	151-5011-00
A24A2Q421	151-5000-00			TRANSISTOR,SIG:BIPOLAR,PNP;40V,200MA,250MHZ,AMPLIFIER;MMBT3906L,TO-236/SOT-23,8MM T&R	04713	MMBT3906LT1
A24A2Q430	151-5001-00			TRANSISTOR,SIG:BIPOLAR,NPN;40V,200MA,300MHZ,AMPLIFIER;MMBT3904L,TO-236/SOT-23,8MM T&R	80009	151-5001-00
A24A2Q450	151-5004-00			TRANSISTOR,SIG:BIPOLAR,NPN;20V,1.0A,65MHZ,AMPLIFIER;BCX68/BC868,SOT-89,12MM T/R	04713	BCX68
A24A2Q540	151-5000-00			TRANSISTOR,SIG:BIPOLAR,PNP;40V,200MA,250MHZ,AMPLIFIER;MMBT3906L,TO-236/SOT-23,8MM T&R	04713	MMBT3906LT1
A24A2Q550	151-5000-00			TRANSISTOR,SIG:BIPOLAR,PNP;40V,200MA,250MHZ,AMPLIFIER;MMBT3906L,TO-236/SOT-23,8MM T&R	04713	MMBT3906LT1
A24A2R120	321-5008-00			RES,FXD:METAL FILM;150 OHM,1%,0.125W,TC=100 PPM;1206,T&R	80009	321-5008-00
A24A2R121	321-5042-00			RES,FXD:METAL FILM;39.2 OHM,1%,0.125W,TC=100 PPM;1206,T&R	80009	321-5042-00
A24A2R122	321-5015-00			RES,FXD:METAL FILM;562 OHM,1%,0.125W,TC=100 PPM;1206,T&R	80009	321-5015-00
A24A2R130	321-5008-00			RES,FXD:METAL FILM;150 OHM,1%,0.125W,TC=100 PPM;1206,T&R	80009	321-5008-00
A24A2R131	321-5008-00			RES,FXD:METAL FILM;150 OHM,1%,0.125W,TC=100 PPM;1206,T&R	80009	321-5008-00
A24A2R140	321-5051-00			RES,FXD:METAL FILM;0 OHM,1%,0.125W,TC=100 PPM;1206,T&R	80009	321-5051-00
A24A2R141	321-5009-00			RES,FXD:METAL FILM;182 OHM,1%,0.125W,TC=100 PPM;1206,T&R	80009	321-5009-00
A24A2R143	321-5043-00			RES,FXD:METAL FILM;47.5 OHM,1%,0.125W,TC=100 PPM;1206,T&R	80009	321-5043-00
A24A2R152	321-5051-00			RES,FXD:METAL FILM;0 OHM,1%,0.125W,TC=100 PPM;1206,T&R	80009	321-5051-00
A24A2R153	321-5043-00			RES,FXD:METAL FILM;47.5 OHM,1%,0.125W,TC=100 PPM;1206,T&R	80009	321-5043-00
A24A2R155	321-5043-00			RES,FXD:METAL FILM;47.5 OHM,1%,0.125W,TC=100 PPM;1206,T&R	80009	321-5043-00
A24A2R200	321-5014-00			RES,FXD:METAL FILM;475 OHM,1%,0.125W,TC=100 PPM;1206,T&R	80009	321-5014-00
A24A2R220	321-5043-00			RES,FXD:METAL FILM;47.5 OHM,1%,0.125W,TC=100 PPM;1206,T&R	80009	321-5043-00
A24A2R221	321-5004-00			RES,FXD:METAL FILM;22.1 OHM,1%,0.125W,TC=100 PPM;1206,T&R	80009	321-5004-00
A24A2R230	321-5000-00			RES,FXD:METAL FILM;10 OHM,1%,0.125W,TC=100 PPM;1206,T&R	57668	MCR18EZHFW10E
A24A2R240	321-5050-00			RES,FXD:METAL FILM;33.2 OHM,1%,0.125W,TC=100 PPM;1206,T&R	57668	MCR18FWEA33E2
A24A2R241	321-5012-00			RES,FXD:METAL FILM;332 OHM,1%,0.125W,TC=100 PPM;1206,T&R	80009	321-5012-00
A24A2R242	321-5012-00			RES,FXD:METAL FILM;332 OHM,1%,0.125W,TC=100 PPM;1206,T&R	80009	321-5012-00
A24A2R243	321-5002-00			RES,FXD:METAL FILM;15 OHM,1%,0.125W,TC=100 PPM;1206,T&R	57668	MCR18EZHFW 15E0
A24A2R300	321-5018-00			RES,FXD:METAL FILM;1.0K OHM,1%,0.125W,TC=100 PPM;1206,T&R	80009	321-5018-00

Component No.	Tektronix Part No.	Serial/Assembly No. Effective	Dscont	Name & Description	Mfr. Code	Mfr. Part No.
A24A2R301	321-5012-00			RES,FXD:METAL FILM;332 OHM,1%,0.125W,TC=100 PPM;1206,T&R	80009	321-5012-00
A24A2R310	321-5018-00			RES,FXD:METAL FILM;1.0K OHM,1%,0.125W,TC=10 0 PPM;1206,T&R	80009	321-5018-00
A24A2R311	321-5012-00			RES,FXD:METAL FILM;332 OHM,1%,0.125W,TC=100 PPM;1206,T&R	80009	321-5012-00
A24A2R312	321-5012-00			RES,FXD:METAL FILM;332 OHM,1%,0.125W,TC=100 PPM;1206,T&R	80009	321-5012-00
A24A2R313	321-5043-00			RES,FXD:METAL FILM;47.5 OHM,1%,0.125W,TC=10 0 PPM;1206,T&R	80009	321-5043-00
A24A2R314	321-5050-00			RES,FXD:METAL FILM;33.2 OHM,1%,0.125W,TC=10 0 PPM;1206,T&R	57668	MCR18FWEA33E2
A24A2R315	321-5012-00			RES,FXD:METAL FILM;332 OHM,1%,0.125W,TC=100 PPM;1206,T&R	80009	321-5012-00
A24A2R320	321-5017-00			RES,FXD:METAL FILM;825 OHM,1%,0.125W,TC=100 PPM;1206,T&R	80009	321-5017-00
A24A2R321	321-5043-00			RES,FXD:METAL FILM;47.5 OHM,1%,0.125W,TC=10 0 PPM;1206,T&R	80009	321-5043-00
A24A2R330	321-5008-00			RES,FXD:METAL FILM;150 OHM,1%,0.125W,TC=100 PPM;1206,T&R	80009	321-5008-00
A24A2R331	321-5000-00			RES,FXD:METAL FILM;10 OHM,1%,0.125W,TC=100 PPM;1206,T&R	57668	MCR18EZHFW10E
A24A2R332	321-5008-00			RES,FXD:METAL FILM;150 OHM,1%,0.125W,TC=100 PPM;1206,T&R	80009	321-5008-00
A24A2R333	321-5022-00			RES,FXD:METAL FILM;2.21K OHM,1%,0.125W,TC=1 00 PPM;1206,T&R	80009	321-5022-00
A24A2R334	321-5008-00			RES,FXD:METAL FILM;150 OHM,1%,0.125W,TC=100 PPM;1206,T&R	80009	321-5008-00
A24A2R335	311-5011-00			RES,VAR,NONWW:5K OHM,20%,0.2W	32997	3335W-1-502E
A24A2R340	321-5030-00			RES,FXD:METAL FILM;10.0K OHM,1%,0.125W,TC=1 00 PPM;1206,T&R	80009	321-5030-00
A24A2R341	321-5024-00			RES,FXD:METAL FILM;3.32K OHM,1%,0.125W,TC=1 00 PPM;1206,T&R	80009	321-5024-00
A24A2R342	321-5018-00			RES,FXD:METAL FILM;1.0K OHM,1%,0.125W,TC=10 0 PPM;1206,T&R	80009	321-5018-00
A24A2R343	321-5037-00			RES,FXD:METAL FILM;39.2K OHM,1%,0.125W,TC=1 00 PPM;1206,T&R	80009	321-5037-00
A24A2R344	321-5030-00			RES,FXD:METAL FILM;10.0K OHM,1%,0.125W,TC=1 00 PPM;1206,T&R	80009	321-5030-00
A24A2R350	321-5022-00			RES,FXD:METAL FILM;2.21K OHM,1%,0.125W,TC=1 00 PPM;1206,T&R	80009	321-5022-00
A24A2R351	321-5008-00			RES,FXD:METAL FILM;150 OHM,1%,0.125W,TC=100 PPM;1206,T&R	80009	321-5008-00
A24A2R352	321-5047-00			RES,FXD:METAL FILM;100K OHM,1%,0.125W,TC=10 0 PPM;1206,T&R	80009	321-5047-00
A24A2R353	321-5047-00			RES,FXD:METAL FILM;100K OHM,1%,0.125W,TC=10 0 PPM;1206,T&R	80009	321-5047-00
A24A2R354	321-5047-00			RES,FXD:METAL FILM;100K OHM,1%,0.125W,TC=10 0 PPM;1206,T&R	80009	321-5047-00
A24A2R360	321-5018-00			RES,FXD:METAL FILM;1.0K OHM,1%,0.125W,TC=10 0 PPM;1206,T&R	80009	321-5018-00
A24A2R361	321-5018-00			RES,FXD:METAL FILM;1.0K OHM,1%,0.125W,TC=10 0 PPM;1206,T&R	80009	321-5018-00
A24A2R370	321-5008-00			RES,FXD:METAL FILM;150 OHM,1%,0.125W,TC=100 PPM;1206,T&R	80009	321-5008-00
A24A2R390	321-5043-00			RES,FXD:METAL FILM;47.5 OHM,1%,0.125W,TC=10 0 PPM;1206,T&R	80009	321-5043-00
A24A2R391	321-5043-00			RES,FXD:METAL FILM;47.5 OHM,1%,0.125W,TC=10 0 PPM;1206,T&R	80009	321-5043-00

Component No.	Tektronix Part No.	Serial/Assembly No. Effective	Dscont	Name & Description	Mfr. Code	Mfr. Part No.
A24A2R400	321-5012-00			RES,FXD:METAL FILM;332 OHM,1%,0.125W,TC=100 PPM;1206,T&R	80009	321-5012-00
A24A2R401	321-5043-00			RES,FXD:METAL FILM;47.5 OHM,1%,0.125W,TC=10 0 PPM;1206,T&R	80009	321-5043-00
A24A2R402	321-5018-00			RES,FXD:METAL FILM;1.0K OHM,1%,0.125W,TC=10 0 PPM;1206,T&R	80009	321-5018-00
A24A2R403	321-5017-00			RES,FXD:METAL FILM;825 OHM,1%,0.125W,TC=100 PPM;1206,T&R	80009	321-5017-00
A24A2R410	321-5012-00			RES,FXD:METAL FILM;332 OHM,1%,0.125W,TC=100 PPM;1206,T&R	80009	321-5012-00
A24A2R411	321-5018-00			RES,FXD:METAL FILM;1.0K OHM,1%,0.125W,TC=10 0 PPM;1206,T&R	80009	321-5018-00
A24A2R412	321-5047-00			RES,FXD:METAL FILM;100K OHM,1%,0.125W,TC=10 0 PPM;1206,T&R	80009	321-5047-00
A24A2R413	321-5014-00			RES,FXD:METAL FILM;475 OHM,1%,0.125W,TC=100 PPM;1206,T&R	80009	321-5014-00
A24A2R414	321-5020-00			RES,FXD:METAL FILM;1.5K OHM,1%,0.125W,TC=10 0 PPM;1206,T&R	80009	321-5020-00
A24A2R415	321-5047-00			RES,FXD:METAL FILM;100K OHM,1%,0.125W,TC=10 0 PPM;1206,T&R	80009	321-5047-00
A24A2R416	321-5043-00			RES,FXD:METAL FILM;47.5 OHM,1%,0.125W,TC=10 0 PPM;1206,T&R	80009	321-5043-00
A24A2R417	321-5014-00			RES,FXD:METAL FILM;475 OHM,1%,0.125W,TC=100 PPM;1206,T&R	80009	321-5014-00
A24A2R418	321-5010-00			RES,FXD:METAL FILM;221 OHM,1%,0.125W,TC=100 PPM;1206,T&R	80009	321-5010-00
A24A2R420	321-5043-00			RES,FXD:METAL FILM;47.5 OHM,1%,0.125W,TC=10 0 PPM;1206,T&R	80009	321-5043-00
A24A2R421	321-5011-00			RES,FXD:METAL FILM;274 OHM,1%,0.125W,TC=100 PPM;1206,T&R	80009	321-5011-00
A24A2R422	321-5043-00			RES,FXD:METAL FILM;47.5 OHM,1%,0.125W,TC=10 0 PPM;1206,T&R	80009	321-5043-00
A24A2R430	321-5018-00			RES,FXD:METAL FILM;1.0K OHM,1%,0.125W,TC=10 0 PPM;1206,T&R	80009	321-5018-00
A24A2R431	321-5025-00			RES,FXD:METAL FILM;3.92K OHM,1%,0.125W,TC=1 00 PPM;1206,T&R	80009	321-5025-00
A24A2R432	321-5018-00			RES,FXD:METAL FILM;1.0K OHM,1%,0.125W,TC=10 0 PPM;1206,T&R	80009	321-5018-00
A24A2R433	321-5018-00			RES,FXD:METAL FILM;1.0K OHM,1%,0.125W,TC=10 0 PPM;1206,T&R	80009	321-5018-00
A24A2R434	321-5030-00			RES,FXD:METAL FILM;10.0K OHM,1%,0.125W,TC=1 00 PPM;1206,T&R	80009	321-5030-00
A24A2R435	321-5030-00			RES,FXD:METAL FILM;10.0K OHM,1%,0.125W,TC=1 00 PPM;1206,T&R	80009	321-5030-00
A24A2R440	321-5039-00			RES,FXD:METAL FILM;56.2K OHM,1%,0.125W,TC=1 00 PPM;1206,T&R	80009	321-5039-00
A24A2R441	321-5047-00			RES,FXD:METAL FILM;100K OHM,1%,0.125W,TC=10 0 PPM;1206,T&R	80009	321-5047-00
A24A2R442	321-5047-00			RES,FXD:METAL FILM;100K OHM,1%,0.125W,TC=10 0 PPM;1206,T&R	80009	321-5047-00
A24A2R450	321-5040-00			RES,FXD:METAL FILM;68.1K OHM,1%,0.125W,TC=1 00 PPM;1206,T&R	80009	321-5040-00
A24A2R451	321-5050-00			RES,FXD:METAL FILM;33.2 OHM,1%,0.125W,TC=10 0 PPM;1206,T&R	57668	MCR18FWEA33E2
A24A2R452	321-5030-00			RES,FXD:METAL FILM;10.0K OHM,1%,0.125W,TC=1 00 PPM;1206,T&R	80009	321-5030-00
A24A2R453	321-5031-00			RES,FXD:METAL FILM;12.1K OHM,1%,0.125W,TC=1 00 PPM;1206,T&R	80009	321-5031-00

Component No.	Tektronix Part No.	Serial/Assembly No. Effective	Dscont	Name & Description	Mfr. Code	Mfr. Part No.
A24A2R510	321-5047-00			RES,FXD:METAL FILM;100K OHM,1%,0.125W,TC=10 0 PPM;1206,T&R	80009	321-5047-00
A24A2R530	321-5026-00			RES,FXD:METAL FILM;4.75K OHM,1%,0.125W,TC=1 00 PPM;1206,T&R	80009	321-5026-00
A24A2R531	321-5026-00			RES,FXD:METAL FILM;4.75K OHM,1%,0.125W,TC=1 00 PPM;1206,T&R	80009	321-5026-00
A24A2R532	321-5025-00			RES,FXD:METAL FILM;3.92K OHM,1%,0.125W,TC=1 00 PPM;1206,T&R	80009	321-5025-00
A24A2R533	321-5030-00			RES,FXD:METAL FILM;10.0K OHM,1%,0.125W,TC=1 00 PPM;1206,T&R	80009	321-5030-00
A24A2R534	321-5030-00			RES,FXD:METAL FILM;10.0K OHM,1%,0.125W,TC=1 00 PPM;1206,T&R	80009	321-5030-00
A24A2R540	321-5043-00			RES,FXD:METAL FILM;47.5 OHM,1%,0.125W,TC=10 0 PPM;1206,T&R	80009	321-5043-00
A24A2R550	321-5026-00			RES,FXD:METAL FILM;4.75K OHM,1%,0.125W,TC=1 00 PPM;1206,T&R	80009	321-5026-00
A24A2R551	321-5018-00			RES,FXD:METAL FILM;1.0K OHM,1%,0.125W,TC=10 0 PPM;1206,T&R	80009	321-5018-00
A24A2R552	321-5018-00			RES,FXD:METAL FILM;1.0K OHM,1%,0.125W,TC=10 0 PPM;1206,T&R	80009	321-5018-00
A24A2R650	321-5043-00			RES,FXD:METAL FILM;47.5 OHM,1%,0.125W,TC=10 0 PPM;1206,T&R	80009	321-5043-00
A24A2R651	321-5043-00			RES,FXD:METAL FILM;47.5 OHM,1%,0.125W,TC=10 0 PPM;1206,T&R	80009	321-5043-00
A24A2R652	321-5015-00			RES,FXD:METAL FILM;562 OHM,1%,0.125W,TC=100 PPM;1206,T&R	80009	321-5015-00
A24A2R653	321-5014-00			RES,FXD:METAL FILM;475 OHM,1%,0.125W,TC=100 PPM;1206,T&R	80009	321-5014-00
A24A2R690	321-5012-00			RES,FXD:METAL FILM;332 OHM,1%,0.125W,TC=100 PPM;1206,T&R	80009	321-5012-00
A24A2R691	321-5002-00			RES,FXD:METAL FILM;15 OHM,1%,0.125W,TC=100 PPM;1206,T&R	57668	MCR18EZHFW 15E0
A24A2R692	321-5012-00			RES,FXD:METAL FILM;332 OHM,1%,0.125W,TC=100 PPM;1206,T&R	80009	321-5012-00
A24A2U230	156-5838-00			IC,DIGITAL:BIPOLAR,PRESCALER;DIVIDE BY 4,2. 5GHZ;UPB585G,SO8M-1,TUBE	80009	156-5838-00
A24A2U300	156-5221-00			IC,DIGITAL:ECL,FLIP FLOP;DUAL D-TYPE;10H131 ,PLCC20,TUBE	80009	156-5221-00
A24A2U320	119-5001-00			MIXER,RING:+7DBM LO,SMD	80009	119-5001-00
A24A2U340	156-5095-01			IC,LINEAR:BIPOLAR,OP-AMP;LOW NOISE,HIGH OUT PUT DRIVE;NE5534D,SO8.150,12MM T&R	80009	156-5095-01
A24A2U450	156-5018-00			IC,LINEAR:BIPOLAR,OP-AMP;DUAL,SINGLE SUPPLY ;LM358D,SO8.150,TUBE	80009	156-5018-00
A24A2U530	156-5018-00			IC,LINEAR:BIPOLAR,OP-AMP;DUAL,SINGLE SUPPLY ;LM358D,SO8.150,TUBE	80009	156-5018-00
A24A2U540	156-5018-00			IC,LINEAR:BIPOLAR,OP-AMP;DUAL,SINGLE SUPPLY ;LM358D,SO8.150,TUBE	80009	156-5018-00
A24A2X110	174-2082-00			CABLE,RESONATOR:0.141 SEMIRIGID COAX,50 OHM ,0.950 L X 0.125 STRIP	80009	174-2082-00
A24A2Y520	158-0383-00			XTAL UNIT,QTZ:105.4953 MHZ, +/- 0.0005%, 5T	59492	150-21290
A24A3	671-1543-00		B010386	CIRCUIT BD ASSY:TG ISOLATION AMP BOARD	80009	671-1543-00
A24A3	671-1543-01	B010387	B021133	CIRCUIT BD ASSY:TG ISOLATION AMP BOARD	80009	671-1543-01
A24A3	671-1543-02	B021134		CIRCUIT BD ASSY:TG ISOLATION AMP BOARD	80009	671-1543-02
A24A3C100	283-5012-00			CAP,FXD,CERAMIC:MLC;1PF,+/-0.25PF,100V		
A24A3C110	283-5005-00			CAP,FXD,CER DI:4PF,+/- 0.25PF,50V	54583	C3216C0G1H040C
A24A3C111	283-5005-00			CAP,FXD,CER DI:4PF,+/- 0.25PF,50V	54583	C3216C0G1H040C
A24A3C130	283-5012-00			CAP,FXD,CER DI:1PF,+/- 0.25PF,100V,0805 PKG ,SMD,TAPE & REEL.	80009	283-5012-00
A24A3C140	283-5005-00			CAP,FXD,CER DI:4PF,+/- 0.25PF,50V	54583	C3216C0G1H040C

Component No.	Tektronix Part No.	Serial/Assembly No. Effective	Dscont	Name & Description	Mfr. Code	Mfr. Part No.
A24A3C141	283-5005-00			CAP,FXD,CER DI:4PF,+/- 0.25PF,50V	54583	C3216C0G1H040C
A24A3C150	283-5005-00			CAP,FXD,CER DI:4PF,+/- 0.25PF,50V	54583	C3216C0G1H040C
A24A3C200	283-5005-00			CAP,FXD,CER DI:4PF,+/- 0.25PF,50V	54583	C3216C0G1H040C
A24A3C201	283-5005-00			CAP,FXD,CER DI:4PF,+/- 0.25PF,50V	54583	C3216C0G1H040C
A24A3C210	283-5005-00			CAP,FXD,CER DI:4PF,+/- 0.25PF,50V	54583	C3216C0G1H040C
A24A3C220	290-5002-00			CAP,FXD,ELCTLT:10UF,20V	TK1424	20MC100M-TER
A24A3C221	283-5005-00			CAP,FXD,CER DI:4PF,+/- 0.25PF,50V	54583	C3216C0G1H040C
A24A3C230	283-5005-00			CAP,FXD,CER DI:4PF,+/- 0.25PF,50V	54583	C3216C0G1H040C
A24A3C231	283-5001-00			CAP,FXD,CER DI:100PF,5%,50V	80009	283-5001-00
A24A3C232	283-5005-00			CAP,FXD,CER DI:4PF,+/- 0.25PF,50V	54583	C3216C0G1H040C
A24A3C240	283-5005-00			CAP,FXD,CER DI:4PF,+/- 0.25PF,50V	54583	C3216C0G1H040C
A24A3C241	283-5005-00			CAP,FXD,CER DI:4PF,+/- 0.25PF,50V	54583	C3216C0G1H040C
A24A3C242	283-5005-00			CAP,FXD,CER DI:4PF,+/- 0.25PF,50V	54583	C3216C0G1H040C
A24A3C300	290-5002-00			CAP,FXD,ELCTLT:10UF,20V	TK1424	20MC100M-TER
A24A3C301	283-5005-00			CAP,FXD,CER DI:4PF,+/- 0.25PF,50V	54583	C3216C0G1H040C
A24A3C310	283-5004-00			CAP,FXD,CER DI:0.1UF,10%,25V	80009	283-5004-00
A24A3C311	283-5004-00			CAP,FXD,CER DI:0.1UF,10%,25V	80009	283-5004-00
A24A3C320	283-5003-00			CAP,FXD,CER DI:0.01UF,10%,50V	80009	283-5003-00
A24A3C340	283-5005-00			CAP,FXD,CER DI:4PF,+/- 0.25PF,50V	54583	C3216C0G1H040C
A24A3C341	283-5004-00			CAP,FXD,CER DI:0.1UF,10%,25V	80009	283-5004-00
A24A3C342	283-5005-00			CAP,FXD,CER DI:4PF,+/- 0.25PF,50V	54583	C3216C0G1H040C
A24A3C350	283-5005-00			CAP,FXD,CER DI:4PF,+/- 0.25PF,50V	54583	C3216C0G1H040C
A24A3C410	283-5004-00			CAP,FXD,CER DI:0.1UF,10%,25V	80009	283-5004-00
A24A3C440	290-5002-00			CAP,FXD,ELCTLT:10UF,20V	TK1424	20MC100M-TER
A24A3C510	283-5004-00			CAP,FXD,CER DI:0.1UF,10%,25V	80009	283-5004-00
A24A3C511	283-5001-00			CAP,FXD,CER DI:100PF,5%,50V	80009	283-5001-00
A24A3C512	283-5001-00			CAP,FXD,CER DI:100PF,5%,50V	80009	283-5001-00
A24A3C513	283-5001-00			CAP,FXD,CER DI:100PF,5%,50V	80009	283-5001-00
A24A3C520	283-5004-00			CAP,FXD,CER DI:0.1UF,10%,25V	80009	283-5004-00
A24A3CR130	152-5066-00			DIODE,SIG:,PIN;100V,0.35PF,1.0K OHMS,800NS; HSMP-3800,SOT-23,TR	80009	152-5066-00
A24A3CR131	152-5066-00			DIODE,SIG:,PIN;100V,0.35PF,1.0K OHMS,800NS; HSMP-3800,SOT-23,TR	80009	152-5066-00
A24A3CR410	152-5004-00			DIODE,SIG:,ULTRA FAST;70V,0.15A,6NS,SER-PAI R;BAV99,SOT-23,8MM TR	25088	BAV99T
A24A3CR510	152-0962-00			SEMICOND DVC,DI:SCHOTTKY,SI,CER STRIPLINE C ASE	80009	152-0962-00
A24A3CR530	152-5011-00			DIODE,SIG:,;6.2V,5%,225MW;MMBZ5234BL,SOT-23 ,8MM TR	80009	152-5011-00
A24A3CR600	152-1063-00			SEMICOND DVC,DI:SCHOTTKY,SI,STAR QUAD,450MV	80009	152-1063-00
A24A3J100	131-4203-00			CONN,RF JACK:	80009	131-4203-00
A24A3J110	131-4203-00			CONN,RF JACK:	80009	131-4203-00
A24A3J500	131-1857-00			CONN,HDR:PCB,;MALE,STR,1 X 36,0.1 CTR,0.230 MLG X 0.100 TAIL,GOLD;	58050	082-3644-SS10
A24A3L130	108-5013-00			COIL,RF:	80009	108-5013-00
A24A3L150	108-5013-00			COIL,RF:	80009	108-5013-00
A24A3L210	108-5013-00			COIL,RF:	80009	108-5013-00
A24A3L230	108-5013-00			COIL,RF:	80009	108-5013-00
A24A3Q110	151-0608-00			TRANSISTOR,SIG:BIPOLAR,NPN;12V,65MA,8.5GHZ, AMPLIFIER;NE64535/2SC2585,4 PIN CERAMIC X P KG	80009	151-0608-00
A24A3Q130	151-0608-00			TRANSISTOR,SIG:BIPOLAR,NPN;12V,65MA,8.5GHZ, AMPLIFIER;NE64535/2SC2585,4 PIN CERAMIC X P KG	80009	151-0608-00
A24A3Q220	151-5000-00			TRANSISTOR,SIG:BIPOLAR,PNP;40V,200MA,250MHZ ,AMPLIFIER;MMBT3906L,TO-236/SOT-23,8MM T&R	04713	MMBT3906LT1
A24A3Q250	151-1221-00			TRANSISTOR,SIG:MESFET,N-CH;GAAS,20MS,3DB@4G HZ;NE72084	80009	151-1221-00

Component No.	Tektronix Part No.	Serial/Assembly No. Effective	Dscont	Name & Description	Mfr. Code	Mfr. Part No.
A24A3Q300	151-5000-00			TRANSISTOR,SIG:BIPOLAR,PNP;40V,200MA,250MHZ ,AMPLIFIER;MMBT3906L,TO-236/SOT-23,8MM T&R	04713	MMBT3906LT1
A24A3Q340	151-5000-00			TRANSISTOR,SIG:BIPOLAR,PNP;40V,200MA,250MHZ ,AMPLIFIER;MMBT3906L,TO-236/SOT-23,8MM T&R	04713	MMBT3906LT1
A24A3Q440	151-5000-00			TRANSISTOR,SIG:BIPOLAR,PNP;40V,200MA,250MHZ ,AMPLIFIER;MMBT3906L,TO-236/SOT-23,8MM T&R	04713	MMBT3906LT1
A24A3R100	321-5014-00			RES,FXD:METAL FILM;475 OHM,1%,0.125W,TC=100 PPM;1206,T&R	80009	321-5014-00
A24A3R101	321-5000-00			RES,FXD:METAL FILM;10 OHM,1%,0.125W,TC=100 PPM;1206,T&R	57668	MCR18EZHFW10E
A24A3R102	321-5014-00			RES,FXD:METAL FILM;475 OHM,1%,0.125W,TC=100 PPM;1206,T&R	80009	321-5014-00
A24A3R120	321-5006-00			RES,FXD:METAL FILM;100 OHM,1%,0.125W,TC=100 PPM;1206,T&R	80009	321-5006-00
A24A3R121	321-5012-00			RES,FXD:METAL FILM;332 OHM,1%,0.125W,TC=100 PPM;1206,T&R	80009	321-5012-00
A24A3R122	321-5002-00			RES,FXD:METAL FILM;15 OHM,1%,0.125W,TC=100 PPM;1206,T&R	57668	MCR18EZHFW 15E0
A24A3R130	321-5012-00			RES,FXD:METAL FILM;332 OHM,1%,0.125W,TC=100 PPM;1206,T&R	80009	321-5012-00
A24A3R140	321-5043-00			RES,FXD:METAL FILM;47.5 OHM,1%,0.125W,TC=10 0 PPM;1206,T&R	80009	321-5043-00
A24A3R141	321-5043-00			RES,FXD:METAL FILM;47.5 OHM,1%,0.125W,TC=10 0 PPM;1206,T&R	80009	321-5043-00
A24A3R200	321-5018-00			RES,FXD:METAL FILM;1.0K OHM,1%,0.125W,TC=10 0 PPM;1206,T&R	80009	321-5018-00
A24A3R210	321-5004-00			RES,FXD:METAL FILM;22.1 OHM,1%,0.125W,TC=10 0 PPM;1206,T&R	80009	321-5004-00
A24A3R220	321-5036-00			RES,FXD:METAL FILM;33.2K OHM,1%,0.125W,TC=1 00 PPM;1206,T&R	80009	321-5036-00
A24A3R221	321-5025-00			RES,FXD:METAL FILM;3.92K OHM,1%,0.125W,TC=1 00 PPM;1206,T&R	80009	321-5025-00
A24A3R230	321-5018-00			RES,FXD:METAL FILM;1.0K OHM,1%,0.125W,TC=10 0 PPM;1206,T&R	80009	321-5018-00
A24A3R231	321-5001-00			RES,FXD:METAL FILM;12.1 OHM,1%,0.125W,TC=10 0 PPM;1206,T&R	57668	MCR18EZHFW 12E1
A24A3R250	321-5010-00			RES,FXD:METAL FILM;221 OHM,1%,0.125W,TC=100 PPM;1206,T&R	80009	321-5010-00
A24A3R251	321-5010-00			RES,FXD:METAL FILM;221 OHM,1%,0.125W,TC=100 PPM;1206,T&R	80009	321-5010-00
A24A3R310	321-5036-00			RES,FXD:METAL FILM;33.2K OHM,1%,0.125W,TC=1 00 PPM;1206,T&R	80009	321-5036-00
A24A3R311	321-5025-00			RES,FXD:METAL FILM;3.92K OHM,1%,0.125W,TC=1 00 PPM;1206,T&R	80009	321-5025-00
A24A3R312	321-5001-00			RES,FXD:METAL FILM;12.1 OHM,1%,0.125W,TC=10 0 PPM;1206,T&R	57668	MCR18EZHFW 12E1
A24A3R313	321-5004-00			RES,FXD:METAL FILM;22.1 OHM,1%,0.125W,TC=10 0 PPM;1206,T&R	80009	321-5004-00
A24A3R314	321-5018-00			RES,FXD:METAL FILM;1.0K OHM,1%,0.125W,TC=10 0 PPM;1206,T&R	80009	321-5018-00
A24A3R315	321-5018-00			RES,FXD:METAL FILM;1.0K OHM,1%,0.125W,TC=10 0 PPM;1206,T&R	80009	321-5018-00
A24A3R316	321-5000-00			RES,FXD:METAL FILM;10 OHM,1%,0.125W,TC=100 PPM;1206,T&R	57668	MCR18EZHFW10E
A24A3R320	321-5048-00			RES,FXD:METAL FILM;332K OHM,1%,0.125W,TC=10 0 PPM;1206,T&R	80009	321-5048-00
A24A3R340	321-5010-00			RES,FXD:METAL FILM;221 OHM,1%,0.125W,TC=100 PPM;1206,T&R	80009	321-5010-00

Component No.	Tektronix Part No.	Serial/Assembly No. Effective	Dscont	Name & Description	Mfr. Code	Mfr. Part No.
A24A3R341	321-5030-00			RES,FXD:METAL FILM;10.0K OHM,1%,0.125W,TC=100 PPM;1206,T&R	80009	321-5030-00
A24A3R342	321-5044-00			RES,FXD:METAL FILM;56.2 OHM,1%,0.125W,TC=100 PPM;1206,T&R	01121	BCD56R2FT
A24A3R343	321-5046-00			RES,FXD:METAL FILM;82.5 OHM,1%,0.125W,TC=100 PPM;1206,T&R	80009	321-5046-00
A24A3R344	321-5006-00			RES,FXD:METAL FILM;100 OHM,1%,0.125W,TC=100 PPM;1206,T&R	80009	321-5006-00
A24A3R345	321-5038-00			RES,FXD:METAL FILM;47.5K OHM,1%,0.125W,TC=100 PPM;1206,T&R	80009	321-5038-00
A24A3R410	321-5030-00			RES,FXD:METAL FILM;10.0K OHM,1%,0.125W,TC=100 PPM;1206,T&R	80009	321-5030-00
A24A3R411	321-5000-00			RES,FXD:METAL FILM;10 OHM,1%,0.125W,TC=100 PPM;1206,T&R	57668	MCR18EZHFW10E
A24A3R412	321-5030-00			RES,FXD:METAL FILM;10.0K OHM,1%,0.125W,TC=100 PPM;1206,T&R	80009	321-5030-00
A24A3R420	321-5013-00			RES,FXD:METAL FILM;392 OHM,1%,0.125W,TC=100 PPM;1206,T&R	80009	321-5013-00
A24A3R421	311-5037-00			RES,VAR,TRMR:CERMET;100 OHM,25%,0.25W,4MM SQ,TOP ADJ;SMD,T&R	TK2073	G4DT101E
A24A3R440	321-5036-00			RES,FXD:METAL FILM;33.2K OHM,1%,0.125W,TC=100 PPM;1206,T&R	80009	321-5036-00
A24A3R500	321-5043-00			RES,FXD:METAL FILM;47.5 OHM,1%,0.125W,TC=100 PPM;1206,T&R	80009	321-5043-00
A24A3R510	321-5036-00			RES,FXD:METAL FILM;33.2K OHM,1%,0.125W,TC=100 PPM;1206,T&R	80009	321-5036-00
A24A3R511	321-5006-00			RES,FXD:METAL FILM;100 OHM,1%,0.125W,TC=100 PPM;1206,T&R	80009	321-5006-00
A24A3R512	321-5043-00			RES,FXD:METAL FILM;47.5 OHM,1%,0.125W,TC=100 PPM;1206,T&R	80009	321-5043-00
A24A3R520	321-5020-00			RES,FXD:METAL FILM;1.5K OHM,1%,0.125W,TC=100 PPM;1206,T&R	80009	321-5020-00
A24A3R521	321-5008-00			RES,FXD:METAL FILM;150 OHM,1%,0.125W,TC=100 PPM;1206,T&R	80009	321-5008-00
A24A3R530	321-5011-00			RES,FXD:METAL FILM;274 OHM,1%,0.125W,TC=100 PPM;1206,T&R	80009	321-5011-00
A24A3R600	321-5002-00			RES,FXD:METAL FILM;15 OHM,1%,0.125W,TC=100 PPM;1206,T&R	57668	MCR18EZHFW 15E0
A24A3R601	321-5012-00			RES,FXD:METAL FILM;332 OHM,1%,0.125W,TC=100 PPM;1206,T&R	80009	321-5012-00
A24A3R602	321-5012-00			RES,FXD:METAL FILM;332 OHM,1%,0.125W,TC=100 PPM;1206,T&R	80009	321-5012-00
A24A3U310	156-5017-01			IC,LINEAR:BIPOLAR,OP-AMP;DUAL;MC1458D,SO8.150,12MM T/R	80009	156-5017-01
A24A4	671-1541-00			CIRCUIT BD ASSY:TG RF AMPLIFIER	80009	671-1541-00
A24A4C101	283-5004-00			CAP,FXD,CER DI:0.1UF,10%,25V	80009	283-5004-00
A24A4C102	283-5010-00			CAP,FXD,CER DI:0.22UF,10%,25V	80009	283-5010-00
A24A4C112	283-5004-00			CAP,FXD,CER DI:0.1UF,10%,25V	80009	283-5004-00
A24A4C121	283-5004-00			CAP,FXD,CER DI:0.1UF,10%,25V	80009	283-5004-00
A24A4C130	283-5004-00			CAP,FXD,CER DI:0.1UF,10%,25V	80009	283-5004-00
A24A4C140	283-5004-00			CAP,FXD,CER DI:0.1UF,10%,25V	80009	283-5004-00
A24A4C150	283-5004-00			CAP,FXD,CER DI:0.1UF,10%,25V	80009	283-5004-00
A24A4C200	290-5002-00			CAP,FXD,ELCTLT:10UF,20V	TK1424	20MC100M-TER
A24A4C300	283-5010-00			CAP,FXD,CER DI:0.22UF,10%,25V	80009	283-5010-00
A24A4C310	283-5010-00			CAP,FXD,CER DI:0.22UF,10%,25V	80009	283-5010-00
A24A4C330	283-5004-00			CAP,FXD,CER DI:0.1UF,10%,25V	80009	283-5004-00
A24A4C340	283-5112-00			CAP,FXD,CER DI:0.33UF,10%,25V	80009	283-5112-00
A24A4C350	283-5017-00			CAP,FXD,CER DI:1PF,+/-0.25PF,50V	80009	283-5017-00
A24A4C360	283-5010-00			CAP,FXD,CER DI:0.22UF,10%,25V	80009	283-5010-00

Component No.	Tektronix Part No.	Serial/Assembly No. Effective	Dscont	Name & Description	Mfr. Code	Mfr. Part No.
A24A4C410	283-5010-00			CAP,FXD,CER DI:0.22UF,10%,25V	80009	283-5010-00
A24A4C411	283-5010-00			CAP,FXD,CER DI:0.22UF,10%,25V	80009	283-5010-00
A24A4C420	283-5010-00			CAP,FXD,CER DI:0.22UF,10%,25V	80009	283-5010-00
A24A4C421	283-5004-00			CAP,FXD,CER DI:0.1UF,10%,25V	80009	283-5004-00
A24A4C430	283-5010-00			CAP,FXD,CER DI:0.22UF,10%,25V	80009	283-5010-00
A24A4C431	290-5002-00			CAP,FXD,ELCTLT:10UF,20V	TK1424	20MC100M-TER
A24A4C510	283-5010-00			CAP,FXD,CER DI:0.22UF,10%,25V	80009	283-5010-00
A24A4C521	283-5000-00			CAP,FXD,CER DI:10PF,5%,50V	80009	283-5000-00
A24A4C540	283-5010-00			CAP,FXD,CER DI:0.22UF,10%,25V	80009	283-5010-00
A24A4C541	283-5010-00			CAP,FXD,CER DI:0.22UF,10%,25V	80009	283-5010-00
A24A4CR340	152-5001-00			DIODE,SIG:SCHTKY,;50V,1.5PF,0.6VF;MMBD701L, SOT-23,8MM TR	80009	152-5001-00
A24A4CR360	152-0962-00			SEMICOND DVC,DI:SCHOTTKY,SI,CER STRIPLINE C ASE	80009	152-0962-00
A24A4J600	131-4203-00			CONN,RF JACK:	80009	131-4203-00
A24A4K600	148-0198-00			RELAY,ARMATURE:2 FORM C,COIL 6VDC, 98 OHM,C ONTACT 1A@28 VDC,PKG TO-5	11532	712-6
A24A4K610	148-0198-00			RELAY,ARMATURE:2 FORM C,COIL 6VDC, 98 OHM,C ONTACT 1A@28 VDC,PKG TO-5	11532	712-6
A24A4K620	148-0198-00			RELAY,ARMATURE:2 FORM C,COIL 6VDC, 98 OHM,C ONTACT 1A@28 VDC,PKG TO-5	11532	712-6
A24A4K630	148-0198-00			RELAY,ARMATURE:2 FORM C,COIL 6VDC, 98 OHM,C ONTACT 1A@28 VDC,PKG TO-5	11532	712-6
A24A4L410	108-5001-00			COIL,RF:FXD,70NH,+/-5%,Q=35,SRF 900MHZ, DCR 0.55 OHM, I MAX	80009	108-5001-00
A24A4L411	108-5001-00			COIL,RF:FXD,70NH,+/-5%,Q=35,SRF 900MHZ, DCR 0.55 OHM, I MAX	80009	108-5001-00
A24A4L510	108-5001-00			COIL,RF:FXD,70NH,+/-5%,Q=35,SRF 900MHZ, DCR 0.55 OHM, I MAX	80009	108-5001-00
A24A4Q430	151-5000-00			TRANSISTOR,SIG:BIPOLAR,PNP;40V,200MA,250MHZ ,AMPLIFIER;MMBT3906L,TO-236/SOT-23,8MM T&R	04713	MMBT3906LT1
A24A4Q530	151-0608-00			TRANSISTOR,SIG:BIPOLAR,NPN;12V,65MA,8.5GHZ, AMPLIFIER;NE64535/2SC2585,4 PIN CERAMIC X P KG	80009	151-0608-00
A24A4R200	321-5008-00			RES,FXD:METAL FILM;150 OHM,1%,0.125W,TC=100 PPM;1206,T&R	80009	321-5008-00
A24A4R201	321-5045-00			RES,FXD:METAL FILM;68.1 OHM,1%,0.125W,TC=10 0 PPM;1206,T&R	80009	321-5045-00
A24A4R202	321-5045-00			RES,FXD:METAL FILM;68.1 OHM,1%,0.125W,TC=10 0 PPM;1206,T&R	80009	321-5045-00
A24A4R210	321-5004-00			RES,FXD:METAL FILM;22.1 OHM,1%,0.125W,TC=10 0 PPM;1206,T&R	80009	321-5004-00
A24A4R211	321-5010-00			RES,FXD:METAL FILM;221 OHM,1%,0.125W,TC=100 PPM;1206,T&R	80009	321-5010-00
A24A4R212	321-5010-00			RES,FXD:METAL FILM;221 OHM,1%,0.125W,TC=100 PPM;1206,T&R	80009	321-5010-00
A24A4R220	321-5044-00			RES,FXD:METAL FILM;56.2 OHM,1%,0.125W,TC=10 0 PPM;1206,T&R	01121	BCD56R2FT
A24A4R221	321-5007-00			RES,FXD:METAL FILM;121 OHM,1%,0.125W,TC=100 PPM;1206,T&R	80009	321-5007-00
A24A4R222	321-5007-00			RES,FXD:METAL FILM;121 OHM,1%,0.125W,TC=100 PPM;1206,T&R	80009	321-5007-00
A24A4R230	321-5010-00			RES,FXD:METAL FILM;221 OHM,1%,0.125W,TC=100 PPM;1206,T&R	80009	321-5010-00
A24A4R231	321-5044-00			RES,FXD:METAL FILM;56.2 OHM,1%,0.125W,TC=10 0 PPM;1206,T&R	01121	BCD56R2FT
A24A4R232	321-5044-00			RES,FXD:METAL FILM;56.2 OHM,1%,0.125W,TC=10 0 PPM;1206,T&R	01121	BCD56R2FT

Component No.	Tektronix Part No.	Serial/Assembly No. Effective	Dscont	Name & Description	Mfr. Code	Mfr. Part No.
A24A4R310	321-5000-00			RES,FXD:METAL FILM;10 OHM,1%,0.125W,TC=100 PPM;1206,T&R	57668	MCR18EZHFW10E
A24A4R311	321-5000-00			RES,FXD:METAL FILM;10 OHM,1%,0.125W,TC=100 PPM;1206,T&R	57668	MCR18EZHFW10E
A24A4R330	321-5047-00			RES,FXD:METAL FILM;100K OHM,1%,0.125W,TC=10 0 PPM;1206,T&R	80009	321-5047-00
A24A4R331	321-5006-00			RES,FXD:METAL FILM;100 OHM,1%,0.125W,TC=100 PPM;1206,T&R	80009	321-5006-00
A24A4R332	321-5024-00			RES,FXD:METAL FILM;3.32K OHM,1%,0.125W,TC=1 00 PPM;1206,T&R	80009	321-5024-00
A24A4R333	321-5026-00			RES,FXD:METAL FILM;4.75K OHM,1%,0.125W,TC=1 00 PPM;1206,T&R	80009	321-5026-00
A24A4R340	321-5024-00			RES,FXD:METAL FILM;3.32K OHM,1%,0.125W,TC=1 00 PPM;1206,T&R	80009	321-5024-00
A24A4R341	321-5047-00			RES,FXD:METAL FILM;100K OHM,1%,0.125W,TC=10 0 PPM;1206,T&R	80009	321-5047-00
A24A4R342	321-5034-00			RES,FXD:METAL FILM;22.1K OHM,1%,0.125W,TC=1 00 PPM;1206,T&R	80009	321-5034-00
A24A4R350	321-5006-00			RES,FXD:METAL FILM;100 OHM,1%,0.125W,TC=100 PPM;1206,T&R	80009	321-5006-00
A24A4R351	321-5018-00			RES,FXD:METAL FILM;1.0K OHM,1%,0.125W,TC=10 0 PPM;1206,T&R	80009	321-5018-00
A24A4R360	321-5046-00			RES,FXD:METAL FILM;82.5 OHM,1%,0.125W,TC=10 0 PPM;1206,T&R	80009	321-5046-00
A24A4R361	321-5044-00			RES,FXD:METAL FILM;56.2 OHM,1%,0.125W,TC=10 0 PPM;1206,T&R	01121	BCD56R2FT
A24A4R362	321-5005-00			RES,FXD:METAL FILM;27.4 OHM,1%,0.125W,TC=10 0 PPM;1206,T&R	80009	321-5005-00
A24A4R410	321-5007-00			RES,FXD:METAL FILM;121 OHM,1%,0.125W,TC=100 PPM;1206,T&R	80009	321-5007-00
A24A4R411	321-5007-00			RES,FXD:METAL FILM;121 OHM,1%,0.125W,TC=100 PPM;1206,T&R	80009	321-5007-00
A24A4R412	321-5007-00			RES,FXD:METAL FILM;121 OHM,1%,0.125W,TC=100 PPM;1206,T&R	80009	321-5007-00
A24A4R430	321-5025-00			RES,FXD:METAL FILM;3.92K OHM,1%,0.125W,TC=1 00 PPM;1206,T&R	80009	321-5025-00
A24A4R431	321-5020-00			RES,FXD:METAL FILM;1.5K OHM,1%,0.125W,TC=10 0 PPM;1206,T&R	80009	321-5020-00
A24A4R432	321-5011-00			RES,FXD:METAL FILM;274 OHM,1%,0.125W,TC=100 PPM;1206,T&R	80009	321-5011-00
A24A4R433	321-5030-00			RES,FXD:METAL FILM;10.0K OHM,1%,0.125W,TC=1 00 PPM;1206,T&R	80009	321-5030-00
A24A4R440	321-5002-00			RES,FXD:METAL FILM;15 OHM,1%,0.125W,TC=100 PPM;1206,T&R	57668	MCR18EZHFW 15E0
A24A4R441	321-5042-00			RES,FXD:METAL FILM;39.2 OHM,1%,0.125W,TC=10 0 PPM;1206,T&R	80009	321-5042-00
A24A4R520	321-5030-00			RES,FXD:METAL FILM;10.0K OHM,1%,0.125W,TC=1 00 PPM;1206,T&R	80009	321-5030-00
A24A4R522	321-5042-00			RES,FXD:METAL FILM;39.2 OHM,1%,0.125W,TC=10 0 PPM;1206,T&R	80009	321-5042-00
A24A4R530	321-5042-00			RES,FXD:METAL FILM;39.2 OHM,1%,0.125W,TC=10 0 PPM;1206,T&R	80009	321-5042-00
A24A4R531	321-5042-00			RES,FXD:METAL FILM;39.2 OHM,1%,0.125W,TC=10 0 PPM;1206,T&R	80009	321-5042-00
A24A4R532	321-5042-00			RES,FXD:METAL FILM;39.2 OHM,1%,0.125W,TC=10 0 PPM;1206,T&R	80009	321-5042-00
A24A4R533	321-5007-00			RES,FXD:METAL FILM;121 OHM,1%,0.125W,TC=100 PPM;1206,T&R	80009	321-5007-00

Component No.	Tektronix Part No.	Serial/Assembly No. Effective	Dscont	Name & Description	Mfr. Code	Mfr. Part No.
A24A4U300	156-2403-00			IC,LINEAR:BIPOLAR,AMPLIFIER;MICROWAVE,12DB GAIN,2.7GHZ;MSA-0335,4 PIN CERAMIC X PKG	80009	156-2403-00
A24A4U330	156-5017-01			IC,LINEAR:BIPOLAR,OP-AMP;DUAL;MC1458D,S08.1 50,12MM T/R	80009	156-5017-01
A24A4U410	156-2403-00			IC,LINEAR:BIPOLAR,AMPLIFIER;MICROWAVE,12DB GAIN,2.7GHZ;MSA-0335,4 PIN CERAMIC X PKG	80009	156-2403-00
A24A4U510	156-2403-00			IC,LINEAR:BIPOLAR,AMPLIFIER;MICROWAVE,12DB GAIN,2.7GHZ;MSA-0335,4 PIN CERAMIC X PKG	80009	156-2403-00
A25	671-1859-01			CIRCUIT BD ASSY:GPIB (OPTION 03 ONLY)	80009	671-1859-01
A25BT600	146-0044-00			BATTERY,DRY:3V,0.17AH @ 0.85MA,BUTTON CELL, LITHIUM-MANGANESE DIOXIDE	00681	ORDER BY DESCR
A25C110	283-5004-00			CAP,FXD,CER DI:0.1UF,10%,25V	80009	283-5004-00
A25C120	283-5004-00			CAP,FXD,CER DI:0.1UF,10%,25V	80009	283-5004-00
A25C170	283-5004-00			CAP,FXD,CER DI:0.1UF,10%,25V	80009	283-5004-00
A25C200	283-5004-00			CAP,FXD,CER DI:0.1UF,10%,25V	80009	283-5004-00
A25C220	283-5004-00			CAP,FXD,CER DI:0.1UF,10%,25V	80009	283-5004-00
A25C250	283-5004-00			CAP,FXD,CER DI:0.1UF,10%,25V	80009	283-5004-00
A25C270	283-5004-00			CAP,FXD,CER DI:0.1UF,10%,25V	80009	283-5004-00
A25C310	283-5004-00			CAP,FXD,CER DI:0.1UF,10%,25V	80009	283-5004-00
A25C320	283-5004-00			CAP,FXD,CER DI:0.1UF,10%,25V	80009	283-5004-00
A25C330	283-5004-00			CAP,FXD,CER DI:0.1UF,10%,25V	80009	283-5004-00
A25C340	283-5004-00			CAP,FXD,CER DI:0.1UF,10%,25V	80009	283-5004-00
A25C350	283-5004-00			CAP,FXD,CER DI:0.1UF,10%,25V	80009	283-5004-00
A25C360	283-5004-00			CAP,FXD,CER DI:0.1UF,10%,25V	80009	283-5004-00
A25C361	283-5004-00			CAP,FXD,CER DI:0.1UF,10%,25V	80009	283-5004-00
A25C370	283-5004-00			CAP,FXD,CER DI:0.1UF,10%,25V	80009	283-5004-00
A25C420	283-5004-00			CAP,FXD,CER DI:0.1UF,10%,25V	80009	283-5004-00
A25C430	283-5004-00			CAP,FXD,CER DI:0.1UF,10%,25V	80009	283-5004-00
A25C440	283-5004-00			CAP,FXD,CER DI:0.1UF,10%,25V	80009	283-5004-00
A25C450	283-5004-00			CAP,FXD,CER DI:0.1UF,10%,25V	80009	283-5004-00
A25C460	283-5004-00			CAP,FXD,CER DI:0.1UF,10%,25V	80009	283-5004-00
A25C513	283-5001-00			CAP,FXD,CER DI:100PF,5%,50V	80009	283-5001-00
A25C710	290-0944-00			CAP,FXD,ELCTLT:220UF,+50-20%,10V	55680	UVX1C221MPA
A25C860	290-0944-00			CAP,FXD,ELCTLT:220UF,+50-20%,10V	55680	UVX1C221MPA
A25C920	290-0944-00			CAP,FXD,ELCTLT:220UF,+50-20%,10V	55680	UVX1C221MPA
A25C990	290-0944-00			CAP,FXD,ELCTLT:220UF,+50-20%,10V	55680	UVX1C221MPA
A25CR110	152-0457-00			SEMICOND DVC,DI:SW,SI,25V,DO-35	28480	5082-2068
A25DS470	150-5000-00			DIODE,OPTO:,LED;RED,628NM;LS S260-DO,SOT-23 ,8MM,TR	80009	150-5000-00
A25DS471	150-5000-00			DIODE,OPTO:,LED;RED,628NM;LS S260-DO,SOT-23 ,8MM,TR	80009	150-5000-00
A25J150	131-2221-00			CONN,HDR:PCB;,MALE,RTANG,2 X 25,0.1 CTR,0.3 18 MLG X 0.110 TAIL,30 GOLD;	22526	65626-150
A25J340	131-1857-00			CONN,HDR:PCB,;MALE,STR,1 X 36,0.1 CTR,0.230 MLG X 0.100 TAIL,GOLD;,,	58050	082-3644-SS10
A25J500	131-1857-00			CONN,HDR:PCB,;MALE,STR,1 X 36,0.1 CTR,0.230 MLG X 0.100 TAIL,GOLD;,,	58050	082-3644-SS10
A25J501	131-1857-00			CONN,HDR:PCB,;MALE,STR,1 X 36,0.1 CTR,0.230 MLG X 0.100 TAIL,GOLD;,,	58050	082-3644-SS10
A25J510	131-1857-00			CONN,HDR:PCB,;MALE,STR,1 X 36,0.1 CTR,0.230 MLG X 0.100 TAIL,GOLD;,,	58050	082-3644-SS10
A25J511	131-1857-00			CONN,HDR:PCB,;MALE,STR,1 X 36,0.1 CTR,0.230 MLG X 0.100 TAIL,GOLD;,,	58050	082-3644-SS10
A25J550	131-2221-00			CONN,HDR:PCB;,MALE,RTANG,2 X 25,0.1 CTR,0.3 18 MLG X 0.110 TAIL,30 GOLD;,,	22526	65626-150
A25P8	131-3556-00			CONN,RCPT,ELEC:CARD CONN,2 X 12,HORIZ	22526	66527-012
A25P500	131-3199-00			BUS,CONDUCTOR:SHUNT,;FEMALE,1 X 2,0.1 CTR,0 .200 H,LOW PROFILE,JUMPER;,,	22526	76264-101

Component No.	Tektronix Part No.	Serial/Assembly No. Effective	Dscont	Name & Description	Mfr. Code	Mfr. Part No.
A25Q211	151-5001-00			TRANSISTOR,SIG:BIPOLAR,NPN;40V,200MA,300MHZ ,AMPLIFIER;MMBT3904L,TO-236/SOT-23,8MM T&R	80009	151-5001-00
A25Q470	151-5001-00			TRANSISTOR,SIG:BIPOLAR,NPN;40V,200MA,300MHZ ,AMPLIFIER;MMBT3904L,TO-236/SOT-23,8MM T&R	80009	151-5001-00
A25Q471	151-5001-00			TRANSISTOR,SIG:BIPOLAR,NPN;40V,200MA,300MHZ ,AMPLIFIER;MMBT3904L,TO-236/SOT-23,8MM T&R	80009	151-5001-00
A25Q510	151-5001-00			TRANSISTOR,SIG:BIPOLAR,NPN;40V,200MA,300MHZ ,AMPLIFIER;MMBT3904L,TO-236/SOT-23,8MM T&R	80009	151-5001-00
A25R211	321-5030-00			RES,FXD:METAL FILM;10.0K OHM,1%,0.125W,TC=1 00 PPM;1206,T&R	80009	321-5030-00
A25R212	321-5030-00			RES,FXD:METAL FILM;10.0K OHM,1%,0.125W,TC=1 00 PPM;1206,T&R	80009	321-5030-00
A25R270	321-5026-00			RES,FXD:METAL FILM;4.75K OHM,1%,0.125W,TC=1 00 PPM;1206,T&R	80009	321-5026-00
A25R300	321-5030-00			RES,FXD:METAL FILM;10.0K OHM,1%,0.125W,TC=1 00 PPM;1206,T&R	80009	321-5030-00
A25R340	321-5026-00			RES,FXD:METAL FILM;4.75K OHM,1%,0.125W,TC=1 00 PPM;1206,T&R	80009	321-5026-00
A25R360	321-5030-00			RES,FXD:METAL FILM;10.0K OHM,1%,0.125W,TC=1 00 PPM;1206,T&R	80009	321-5030-00
A25R361	321-5047-00			RES,FXD:METAL FILM;100K OHM,1%,0.125W,TC=10 0 PPM;1206,T&R	80009	321-5047-00
A25R362	321-5047-00			RES,FXD:METAL FILM;100K OHM,1%,0.125W,TC=10 0 PPM;1206,T&R	80009	321-5047-00
A25R363	321-5047-00			RES,FXD:METAL FILM;100K OHM,1%,0.125W,TC=10 0 PPM;1206,T&R	80009	321-5047-00
A25R450	321-5047-00			RES,FXD:METAL FILM;100K OHM,1%,0.125W,TC=10 0 PPM;1206,T&R	80009	321-5047-00
A25R451	321-5030-00			RES,FXD:METAL FILM;10.0K OHM,1%,0.125W,TC=1 00 PPM;1206,T&R	80009	321-5030-00
A25R452	321-5030-00			RES,FXD:METAL FILM;10.0K OHM,1%,0.125W,TC=1 00 PPM;1206,T&R	80009	321-5030-00
A25R453	321-5030-00			RES,FXD:METAL FILM;10.0K OHM,1%,0.125W,TC=1 00 PPM;1206,T&R	80009	321-5030-00
A25R470	321-5030-00			RES,FXD:METAL FILM;10.0K OHM,1%,0.125W,TC=1 00 PPM;1206,T&R	80009	321-5030-00
A25R471	321-5030-00			RES,FXD:METAL FILM;10.0K OHM,1%,0.125W,TC=1 00 PPM;1206,T&R	80009	321-5030-00
A25R472	321-5030-00			RES,FXD:METAL FILM;10.0K OHM,1%,0.125W,TC=1 00 PPM;1206,T&R	80009	321-5030-00
A25R473	321-5030-00			RES,FXD:METAL FILM;10.0K OHM,1%,0.125W,TC=1 00 PPM;1206,T&R	80009	321-5030-00
A25R510	321-5018-00			RES,FXD:METAL FILM;1.0K OHM,1%,0.125W,TC=10 0 PPM;1206,T&R	80009	321-5018-00
A25R511	321-5030-00			RES,FXD:METAL FILM;10.0K OHM,1%,0.125W,TC=1 00 PPM;1206,T&R	80009	321-5030-00
A25R512	321-5030-00			RES,FXD:METAL FILM;10.0K OHM,1%,0.125W,TC=1 00 PPM;1206,T&R	80009	321-5030-00
A25R514	321-5026-00			RES,FXD:METAL FILM;4.75K OHM,1%,0.125W,TC=1 00 PPM;1206,T&R	80009	321-5026-00
A25R570	321-5010-00			RES,FXD:METAL FILM;221 OHM,1%,0.125W,TC=100 PPM;1206,T&R	80009	321-5010-00
A25R571	321-5010-00			RES,FXD:METAL FILM;221 OHM,1%,0.125W,TC=100 PPM;1206,T&R	80009	321-5010-00
A25U110	156-2760-00			IC,DIGITAL:CMOS,MISC;NONVOLATILE CONTROLLER CHIP;DS1210,DIP8.3,TUBE	0B0A9	DS1210
A25U130	156-2463-00			IC,DIGITAL:HCMOS,GATE;QUAD 2-INPUT OR;74HC3 2,DIP14.3	18324	74HC32N

Component No.	Tektronix Part No.	Serial/Assembly No. Effective	Dscont	Name & Description	Mfr. Code	Mfr. Part No.
A25U170	156-1414-00			IC,DIGITAL:LSTTL,TRANSCEIVER;OCTAL IEEE-488 GPIB BUS XCVR;75160,DIP20.3	80009	156-1414-00
A25U200	156-3629-00			IC,PROCESSOR:CMOS,PERIPHERAL;RTC, CLOCK CAL ENDAR;62X42,DIP18.3	80009	156-3629-00
A25U210	156-5155-00			IC,DIGITAL:HCMOS,GATE;HEX INV;74HC04,SO14.1 50,TUBE	80009	156-5155-00
A25U220	156-5286-00			IC,MEMORY:CMOS,SRAM;32K X 8,120NS,50UA,OE;4 3256,SO28M.330,TUBE	80009	156-5286-00
A25U250	156-5101-01			IC,DIGITAL:HCTCMOS,LATCH;OCTAL D-TYPE, 3-ST ATE;74HCT373,SO20.300,24MM T&R	80009	156-5101-01
A25U270	156-6223-00			IC,PROCESSOR:NMOS,PERIPHERAL;GPIB CONTROLLE R,TEXAS INSTR PINOUT;9914A,PLCC44,TUBE	80009	156-6223-00
A25U311	160-5433-00			MICROCKT,DGTL:STTL,PLD,FPLS,PRGM	80009	160-5433-00
A25U312	160-7548-01			IC,DIGITAL:CMOS,EPROM;131072 X 8,PRGM 156-3 267-00,250NS,27C010,DIP32.6	80009	160-7548-01
A25U320	156-5286-00			IC,MEMORY:CMOS,SRAM;32K X 8,120NS,50UA,OE;4 3256,SO28M.330,TUBE	80009	156-5286-00
A25U330	160-5329-00			MICROCKT,DGTL:STTL.PLD,FPLA,PRGM	80009	160-5329-00
A25U340	160-5328-00			IC,DIGITAL:STTL.PLD;FPLA,PLS173,30NS,170MA, PRGM 156-5283-00;PLS173A,PLCC28-1	80009	160-5328-00
A25U350	156-5220-01			IC,DIGITAL:HCTCMOS,BUFFER;OCTAL BUFFER/DRIV ER, 3-STATE;74HCT541,SO20.300,24MM T&R	80009	156-5220-01
A25U360	156-5146-00			IC,DIGITAL:HCTCMOS,GATE;QUAD 2-INPUT AND;74 HCT08,SO14.150,TUBE	80009	156-5146-00
A25U361	156-5081-01			IC,DIGITAL:HCTMOS,GATE;HEX INVERTER;74HCT04 ,SO14.150,16MM T&R	80009	156-5081-01
A25U370	156-1459-00			IC,DIGITAL:LSTTL,TRANSCEIVER;OCTAL IEEE-488 GPIB BUS MGT;75162A, DIP22.4	80009	156-1459-00
A25U410	160-7547-01			IC,DIGITAL:CMOS,EPROM;131072 X 8,PRGM 156-3 267-00,250NS,27C010,DIP32.6	80009	160-7547-01
A25U420	156-5286-00			IC,MEMORY:CMOS,SRAM;32K X 8,120NS,50UA,OE;4 3256,SO28M.330,TUBE	80009	156-5286-00
A25U430	156-5220-01			IC,DIGITAL:HCTCMOS,BUFFER;OCTAL BUFFER/DRIV ER, 3-STATE;74HCT541,SO20.300,24MM T&R	80009	156-5220-01
A25U440	156-5220-01			IC,DIGITAL:HCTCMOS,BUFFER;OCTAL BUFFER/DRIV ER, 3-STATE;74HCT541,SO20.300,24MM T&R	80009	156-5220-01
A25U450	156-5071-00			IC,DIGITAL:HCTCMOS,TRANSCEIVER;OCTAL, 3-STA TE;74HCT245,SO20.300,TUBE	80009	156-5071-00
A25U460	156-5220-01			IC,DIGITAL:HCTCMOS,BUFFER;OCTAL BUFFER/DRIV ER, 3-STATE;74HCT541,SO20.300,24MM T&R	80009	156-5220-01
A25W501	321-5051-00			RES,FXD:METAL FILM;0 OHM,1%,0.125W,TC=100 P	80009	321-5051-00
FL16	119-0294-01			FILTER,LOW PASS:DC TO 1.8GHZ	50140	11L250-X1800-0
FL17	119-2205-00			1ST IF FILTER:TUNED CAVITY 2110	80009	119-2205-00
FL18	015-1027-00			FILTER,LOW PASS:	80009	015-1027-00
J102	136-0094-00			JACK,TELEPHONE:MINIATURE,SHUNT TYPE	80009	136-0094-00
LS103	119-0962-00			LOUDSPEAKER,PM:8 OHM,3W,2.047 DIA	54473	EAS-5PH04SC
R360	311-0679-00			RES,VAR,NONWW:PNL,2X10K OHM,0.5W	12697	D381-CM39687
R480	311-2052-00			RES,VAR,NONWW:PNL,20K OHM,20%,0.5W	80009	311-2052-00
V1	154-0913-00		B0414000	ELECTRON TUBE:CRT,FINISHED	80009	154-0913-00
V1	194-1000-00	B0414000				
W4	174-0199-01			CA ASSY,SP,ELEC:SEMI-RIGID	80009	174-0199-01
W1	174-3740-00	B0414000				
W6	174-1228-00			CA ASSY,SP,ELEC:20,26 AWG,14.75 L,RIBBON	TK2469	174-1228-00
W7	174-0195-00			CA ASSY,SP,ELEC:	80009	174-0195-00
W8	174-0196-00			CA ASSY,SP,ELEC:	80009	174-0196-00
W10	174-0194-00			CA ASSY,SP,ELEC:	80009	174-0194-00
W11	174-0818-00			CABLE ASSY,RF:50 OHM COAX,5.25 L	80009	174-0818-00
W12	174-0817-00			CABLE ASSY,RF:50 OHM COAX,7.25 L	80009	174-0817-00
W16	174-0819-00			CABLE ASSY,RF:50 OHM COAX,8.25 L	80009	174-0819-00

Component No.	Tektronix Part No.	Serial/Assembly No. Effective	Dscont	Name & Description	Mfr. Code	Mfr. Part No.
W22	174-0200-00			CA ASSY,SP,ELEC:SEMI-RIGID	80009	174-0200-00
W24	174-0192-00			CA ASSY,SP,ELEC: SEMI-RIGID	80009	174-0192-00
W25	174-0251-00			CA ASSY,SP,ELEC:4,26 AWG,3.0 L,RIBBON	80009	174-0251-00
W26	174-0534-00			CA ASSY,SP,ELEC:50,28 AWG,5.0 L RIBBON	TK2469	174-0534-00
W28	174-0265-01			CA ASSY,SP,ELEC:10,26 AWG,7.25 L	80009	174-0265-01
W29	174-0406-01			CA ASSY,SP,ELEC:3,26 AWG,6.5 L	80009	174-0406-01
W30	174-1138-00			CABLE ASSY,RF:4 CAV FLTR TO LOW PASS FLTR,4 .915 L,SEMI-RIGID	80009	174-1138-00
W31	174-1143-00			CABLE ASSY,RF:LOW PASS FLTR TO 1ST CONVERTE R,2.37 L,SEMI-RIGID	80009	174-1143-00
W35	174-1263-01			CA ASSY,RF:50 OHM COAX,14.0 L	80009	174-1263-01
W36	174-0817-00			CABLE ASSY,RF:50 OHM COAX,7.25 L	80009	174-0817-00
W37	174-0817-00			CABLE ASSY,RF:50 OHM COAX,7.25 L	80009	174-0817-00
W38	174-0817-00			CABLE ASSY,RF:50 OHM COAX,7.25 L	80009	174-0817-00
W39	174-1238-00			CABLE ASSY,RF:50 OHM COAX,16.5 L	TK2469	174-1238-00
W40	174-1237-00			CABLE ASSY,RF:50 OHM COAX,12.5 L	TK2469	174-1237-00
W41	174-0820-00			CABLE ASSY,RF:50 OHM COAX,11.5 L	80009	174-0820-00
W42	174-1237-00			CABLE ASSY,RF:50 OHM COAX,12.5 L	TK2469	174-1237-00
W43	174-1237-00			CABLE ASSY,RF:50 OHM COAX,12.5 L	TK2469	174-1237-00
W44	174-0819-00			CABLE ASSY,RF:50 OHM COAX,8.25 L	80009	174-0819-00
W45	174-0819-00			CABLE ASSY,RF:50 OHM COAX,8.25 L	80009	174-0819-00
W46	174-1227-01			CA ASSY,SP,ELEC:8 COND,5,26 AWG,RIBBON	80009	174-1227-01
W50	174-1533-00			CABLE ASSY,RF:50 OHM	80009	174-1533-00
W51	174-2077-00			CABLE ASSY,RF:50 OHM COAX,SEMI RIGID (OPTION 15 ONLY)	80009	174-2077-00
W52	174-2083-00			CABLE ASSY,RF:50 OHM COAX,SEMI RIGID,13.0L (OPTION 04 ONLY)	80009	174-2083-00
W53	174-2084-00			CABLE ASSY,RF:50 OHM COAX,SEMI RIGID,20.0L (OPTION 04 ONLY)	80009	174-2084-00
W54	174-2141-00			CA ASSY,SP,ELEC:10,28 AWG,5.0 L,FLAT,W/STRA IN RELIEF (OPTION 04 ONLY)	80009	174-2141-00
W55	174-1811-00			CABLE ASSY,RF:50 OHM COAX,DUAL SHLD,18.0 L, SMB X LUG,TIP TIN (OPTION 04 ONLY)	80009	174-1811-00
W56	174-1822-00			CA ASSY,SP,ELEC:24,24 AWG,16.0 L,RIBBON,PNL MT X 2 X 12 RCPT	80009	174-1822-00
W56	174-2395-00	B010100	B010197	CA ASSY,SP,ELEC:10,28 AWG,14.750 L	80009	174-2395-00
W56	174-2395-01	B010198		CA ASSY,SP,ELEC:10,28 AWG,14.750 L (OPTION 08 ONLY)	80009	174-2395-01
W58	174-0966-00			CABLE ASSY,RF:50 OHM,14.525 L,SEMI RIGID (OPTION 15 ONLY)	80009	174-0966-00

ELECTRICAL PARTS — 2712

REPLACEABLE ELECTRICAL PARTS

PARTS ORDERING INFORMATION

Replacement parts are available from or through your local Tektronix, Inc. Field Office or representative.

Changes to Tektronix instruments are sometimes made to accommodate improved components as they become available, and to give you the benefit of the latest circuit improvements. It is therefore important, when ordering parts, to include the following information in your order: Part number, instrument type or number, serial number, and modification number if applicable.

Change information, if any, is located at the rear of this manual.

LIST OF ASSEMBLIES

A list of assemblies can be found at the beginning of the Electrical Parts List. The assemblies are listed in numerical order. When the complete component number of a part is known, this list will identify the assembly in which the part is located.

CROSS INDEX-MFR. CODE NUMBER TO MANUFACTURER

The Mfr. Code Number to Manufacturer Cross index for the Electrical Parts List is located immediately after this page. The Cross index provides codes, names and addresses of manufacturers of components listed in the Electrical Parts List.

ABBREVIATIONS

Abbreviations conform to American National Standard Y1.1.

COMPONENT NUMBER
(column one of the Electrical Parts List)

A numbering method has been used to identify assemblies, subassemblies and parts. Examples of this numbering method with an explanation of each follows.

Example a.

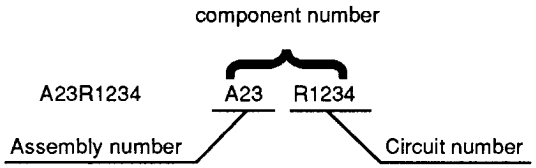

Read: Resistor 1234 of Assembly 23

Example b.

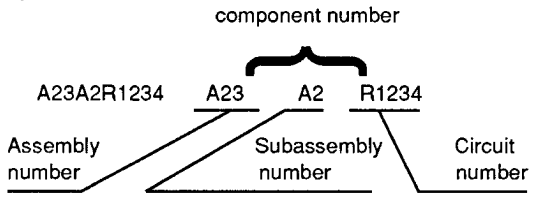

Read: Resistor 1234 of Subassembly 2 of Assembly 23

Only the circuit number appears on the diagrams and circuit board illustrations. Each diagram and circuit board illustration is clearly marked with the assembly number. Assembly numbers are also marked on the mechanical exploded views located in the Mechanical Parts List. The component number is obtained by adding the assembly number prefix to the circuit number.

The Electrical Parts List is divided and arranged by assemblies in numerical sequence (e.g. assembly A1 with its subassemblies and parts precedes assembly A2 with its subassemblies and parts).

Chassis-mounted parts have no assembly number prefix and are located at the end of the Electrical Parts List.

TEKTRONIX PART NO.
(column two of the Electrical Parts List)

Indicates part number to be used when ordering a replacement part from Tektronix.

SERIAL/MODEL NO.
(columns three and four of the Electrical Parts List)

Column three (3) indicates the serial number at which the part was first used. Column four (4) indicates the serial number at which the part was removed. No serial number entered indicates part is good for all serial numbers.

NAME & DESCRIPTION
(column five of the Electrical Parts List)

In the Parts List, an Item Name is separated from the description by a colon (:). Because of space limitations, an Item Name may sometimes appear as incomplete. For further Item Name identification, the U.S. Federal Cataloging Handbook H6-1 can be used where possible.

MFR. CODE
(column six of the Electrical Parts List)

Indicates the code number of the actual manufacturer of the part. (Code to name and address cross reference can be found immediately after this page.)

MFR. PART NUMBER
(column seven of the Electrical Parts List)

Indicates actual manufacturers part number.

CROSS INDEX - MFR. CODE NUMBER TO MANUFACTURER

Mfr. Code	Manufacturer	Address	City, State, Zip Code
00681	MINE SAFETY APPLIANCE CO CATALYST RESEARCH DIV	1421 CLARKVIEW RD	BALTIMORE MD 21209-2103
00779	AMP INC	2800 FULLING MILL PO BOX 3608	HARRISBURG PA 17105
01121	ALLEN-BRADLEY CO	1201 S 2ND ST	MILWAUKEE WI 53204-2410
01295	TEXAS INSTRUMENTS INC SEMICONDUCTOR GROUP	13500 N CENTRAL EXPY PO BOX 655012	DALLAS TX 75265
02113	COILCRAFT INC	1102 SILVER LAKE RD	CARY IL 60013-1658
02114	AMPEREX ELECTRONIC CORP FERROXCUBE DIV	5083 KINGS HWY	SAUGERTIES NY 12477
03508	GENERAL ELECTRIC CO SEMI-CONDUCTOR PRODUCTS DEPT	W GENESEE ST	AUBURN NY 13021
04222	AVX CERAMICS DIV OF AVX CORP	19TH AVE SOUTH P O BOX 867	MYRTLE BEACH SC 29577
04713	MOTOROLA INC SEMICONDUCTOR PRODUCTS SECTOR	5005 E MCDOWELL RD	PHOENIX AZ 85008-4229
05397	UNION CARBIDE CORP MATERIALS SYSTEMS DIV	11901 MADISON AVE	CLEVELAND OH 44101
07088	KELVIN ELECTRIC CO	5907 NOBLE AVE	VAN NUYS CA 91411
07716	TRW INC TRW IRC FIXED RESISTORS/BURLINGTON	2850 MT PLEASANT AVE	BURLINGTON IA 52601
0JR03	ZMAN AND ASSOCIATES	7633 S 180th	KENT WA 98032
11532	TELEDYNE RELAYS TELEDYNE INDUSTRIES INC SUB OF TELEDYNE INC	12525 DAPHNE AVE	HAWTHORNE CA 90250-3308
12020	OVENAIRE DIV OF ELECTRONIC TECHNOLOGIES INC	706 FORREST ST PO BOX 1528	CHARLOTTESVILLE VA 22901-4224
12697	CLAROSTAT MFG CO INC	LOWER WASHINGTON ST	DOVER NH 03820
14552	MICROSEMI CORP	2830 S FAIRVIEW ST	SANTA ANA CA 92704-5948
18324	SIGNETICS CORP MILITARY PRODUCTS DIV	4130 S MARKET COURT	SACRAMENTO CA 95834-1222
18612	VISHAY INTERTECHNOLOGY INC VISHAY RESISTOR PRODUCTS GROUP	63 LINCOLN HWY	MALVERN PA 19355-2120
19701	PHILIPS COMPONENTS DISCRETE PRODUCTS DIV RESISTIVE PRODUCTS FACILITY AIRPORT ROAD	PO BOX 760	MINERAL WELLS TX 76067-0760
22526	DU PONT E I DE NEMOURS AND CO INC DU PONT ELECTRONICS DEPT	515 FISHING CREEK RD	NEW CUMBERLAND PA 17070-3007
24165	SPRAGUE ELECTRIC CO	267 LOWELL ROAD	HUDSON NH 03051
24931	SPECIALTY CONNECTOR CO INC	2100 EARLYWOOD DR PO BOX 547	FRANKLIN IN 46131
25088	SIEMENS CORP	186 WOOD AVE S	ISELIN NJ 08830-2704
27014	NATIONAL SEMICONDUCTOR CORP	2900 SEMICONDUCTOR DR	SANTA CLARA CA 95051-0606
28480	HEWLETT-PACKARD CO CORPORATE HQ	3000 HANOVER ST	PALO ALTO CA 94304-1112
2M627	ROHM CORPORATION	PO BOX 19515	IRVINE CA 92713
31918	ITT SCHADOW INC	8081 WALLACE RD	EDEN PRAIRIE MN 55344-2224
32997	BOURNS INC TRIMPOT DIV	1200 COLUMBIA AVE	RIVERSIDE CA 92507-2114
33095	SPECTRUM CONTROL INC	2185 W WEIGHT ST	ERIE PA 16505
34630	K AND L/QUARTZTEK INC	3940 W MONTECITO	PHOENIX AZ 85019
50101	FREQUENCY SOURCES INC SEMICONDUCTOR DIV SUB OF LORAL CORP	16 MAPLE RD	CHELMSFORD MA 01824-3737
50140	K AND L MICROWAVE INC SUB OF DOVER CORP	408 COLES CIR	SALISBURY MD 21801-3214
50434	HEWLETT-PACKARD CO OPTOELECTRONICS DIV	370 W TRIMBLE RD	SAN JOSE CA 95131
51406	MURATA ERIE NORTH AMERICA INC HEADQUARTERS AND GEORGIA OPERATIONS	2200 LAKE PARK DR	SMYRNA GA 30080
51642	CENTRE ENGINEERING INC	2820 E COLLEGE AVE	STATE COLLEGE PA 16801-7515
52769	SPRAGUE-GOODMAN ELECTRONICS INC	134 FULTON AVE	GARDEN CITY PARK NY 11040-5352
54473	MATSUSHITA ELECTRIC CORP OF AMERICA	ONE PANASONIC WAY PO BOX 1501	SECAUCUS NJ 07094-2917
54583	TDK ELECTRONICS CORP	12 HARBOR PARK DR	PORT WASHINGTON NY 11550
54937	DEYOUNG MANUFACTURING INC	12920 NE 125TH WAY	KIRKLAND WA 98034-7716
55680	NICHICON /AMERICA/ CORP	927 E STATE PKY	SCHAUMBURG IL 60195-4526

CROSS INDEX - MFR. CODE NUMBER TO MANUFACTURER

Mfr. Code	Manufacturer	Address	City, State, Zip Code
57027	INTERNATIONAL RESISTIVE PRODUCTS INC	4222 S STAPLES	CORPUS CHRISTI TX 78411-2702
57668	ROHM CORP	8 WHATNEY PO BOX 19515	IRVINE CA 92713
58050	TEKA PRODUCTS INC	45 SALEM ST	PROVIDENCE RI 02907
59492	K AND L QUARTZTEK DIV OF K AND L MICROWAVE INC		
71400	BUSSMANN DIV OF COOPER INDUSTRIES INC	114 OLD STATE RD PO BOX 14460	ST LOUIS MO 63178
72982	ERIE SPECIALTY PRODUCTS INC	645 W 11TH ST	ERIE PA 16512
75498	MULTICOMP INC	3005 SW 154TH TERRACE #3	BEAVERTON OR 97006
80009	TEKTRONIX INC	14150 SW KARL BRAUN DR PO BOX 500	BEAVERTON OR 97077-0001
81073	GRAYHILL INC	561 HILLGROVE AVE PO BOX 10373	LA GRANGE IL 60525-5914
81483	INTERNATIONAL RECTIFIER	9220 SUNSET BLVD	LOS ANGELES CA 90069-3501
91637	DALE ELECTRONICS INC	2064 12TH AVE PO BOX 609	COLUMBUS NE 68601-3632
92966	GTE PRODUCTS CORP LIGHTING PRODUCTS GROUP HILLSBORO		
95275	VITRAMON INC	BOX 544	BRIDGEPORT CT 06601-0544
98291	SEALECTRO CORP BICC ELECTRONICS	40 LINDEMAN DR	TURNBULL CT 06611-4739
D5243	ROEDERSTEIN E SPEZIALFABRIK FUER KONDENSATOREN GMBN	LUDMILLASTRASSE 23-25	8300 LANDSHUT GERMANY
TK0146	BUEHLER PRODUCTS INC	PO BOX A HIGHWAY 70	EAST KINSTON NC 28501
TK0510	PANASONIC COMPANY DIV OF MATSUSHITA ELECTRIC CORP	ONE PANASONIC WAY	SECAUCUS NJ 07094
TK0515	ERICSSON COMPONENTS INC	403 INTERNATIONAL PKY PO BOX 853904	RICHARDSON TX 75085-3904
TK0768	SUPERTEX INC	1225 BORDEAUX DRIVE	SUNNYVALE CA 94086
TK0900	UNITED CHEMICON		
TK1345	ZMAN & ASSOCIATES		
TK1395	ROEDERSTEIN ELECTRONICS INC		
TK1424	MARCON AMERICA CORP		
TK1450	TOKYO COSMOS ELECTRIC CO LTD	2-268 SOBUDAI ZAWA	KANAGAWA 228 JAPAN
TK1869	ALPS	100 N CNTRE AVE	ROCKVILLE CENTRE NY 11570
TK2073	TOCOS AMERICA INC	565 W GULF ROAD	ARLINGTON HEIGHTS IL 60005
TK2469	UNITREK CORPORATION	3000 LEWIS & CLARK WAY SUITE #2	VANCOUVER WA 98601

Component No.	Tektronix Part No.	Serial/Assembly No. Effective	Dscont	Name & Description	Mfr. Code	Mfr. Part No.
A5	671-0974-03			CIRCUIT BD ASSY:SWEEP	80009	671-0974-03
A5	671-0974-04		B03419			
A5	671-0974-05	B044200				
A6	671-1923-01			CIRCUIT BD ASSY:FRONT PANEL	80009	671-1923-01
A7	671-1674-00	B010100	B011149	CIRCUIT BD ASSY:LOG AMP	80009	671-1674-00
A7	671-1674-01	B011150	B011344	CIRCUIT BD ASSY:LOG AMP	80009	671-1674-01
A7	671-1674-02	B011345		CIRCUIT BD ASSY:LOG AMP	80009	671-1674-02
A9	670-9468-01	B010100	B010930	CIRCUIT BD ASSY:DIGITAL STORAGE	80009	670-9468-01
A9	670-9468-02	B010931	B011077	CIRCUIT BD ASSY:DIGITAL STORAGE	80009	670-9468-02
A9	670-9468-03	B011078		CIRCUIT BD ASSY:DIGITAL STORAGE	80009	670-9468-03
A10	671-0653-14			CIRCUIT BD ASSY:MICROPROCESSOR	80009	671-0653-14
A11	671-1858-01			CIRCUIT BD ASSY:RS232 ()PTION 08)	80009	671-1858-01
A12	672-1284-03	B010100	B010475	CIRCUIT BD ASSY:PHASELOCK CFC MODULE	80009	672-1284-03
A12	672-1284-04	B010476	B011147	CIRCUIT BD ASSY:PHASELOCK CFC MODULE	80009	672-1284-04
A12	672-1284-05	B011148		CIRCUIT BD ASSY:PHASELOCK CFC MODULE	80009	672-1284-05
A12A1	----- -----			(PART OF A12) PHASELOCK CF CONTROL		
A12A2	----- -----			(PART OF A12) HIGH FREQ VCO		
A12A3	----- -----			(PART OF A12) LOW FREQUENCY		
A13	670-9475-03	B010100	B010989	CIRCUIT BD ASSY:VR W/SMD	80009	670-9475-03
A13	670-9475-04	B010990		CIRCUIT BD ASSY:VARIABLE RESOLUTION	80009	670-9475-04
A14	672-1308-00	B010100	B010657	CIRCUIT BD ASSY:RF MOM	80009	672-1308-00
A14	672-1308-01	B010658		CIRCUIT BD ASSY:RF MOM	80009	672-1308-01
A14	672-1308-02					
A14	672-1308-03					
A14	672-1308-04					
A14	672-1308-05	B033995				
A14A1	671-1196-00	B010100	B010212	CIRCUIT BD ASSY:RF MOM	80009	671-1196-00
A14A1	671-1196-01	B010213	B010393	CIRCUIT BD ASSY:RF MOM	80009	671-1196-01
A14A1	671-1196-02	B010394		CIRCUIT BD ASSY:RF MOM	80009	671-1196-02
A14A2	671-1197-00	B010100	B010657	CIRCUIT BD ASSY:LOCKED 2ND LO	80009	671-1197-00
A14A2	671-1197-01	B010658		CIRCUIT BD.ASSY:LOCKED 2ND LO	80009	671-1197-01
A15	621-0074-02	B010100	B010276	POWER SUPPLY:CIRCUIT BOARD,7 CHASSIS	80009	621-0074-02
A15	621-0083-00	B010277	B010348	POWER SUPPLY:CIRCUIT BOARD,7 CHASSIS	80009	621-0083-00
A15	621-0083-03	B010316		POWER SUPPLY:CIRCUIT BOARD 7 CHASSIS	80009	621-0083-03
A15	621-0083-01	B010349	B011033	POWER SUPPLY:CIRCUIT BOARD,7 CHASSIS	80009	621-0083-01
A15	621-0083-02	B011034	B010315	POWER SUPPLY:CIRCUIT BOARD,7 CHASSIS	80009	621-0083-02
A15	621-0083-04	B0xxxxx		POWER SUPPLY: CIRCUIT BOARD 7 CHASSIS	80009	621-0083-04
A15	621-0083-05	B0xxxxx		POWER SUPPLY: CIRCUIT BOARD 7 CHASSIS	80009	621-0083-05
A15	621-0083-06	B0xxxxx	B022162	POWER SUPPLY: CIRCUIT BOARD 7 CHASSIS	80009	621-0083-06
A15	621-0083-07	B022163		POWER SUPPLY: CIRCUIT BOARD 7 CHASSIS	80009	621-0083-07
A15	621-0083-08	B022574		POWER SUPPLY: CIRCUIT BOARD 7 CHASSIS	80009	621-0083-08
A15	621-0083-09	B022574		POWER SUPPLY: CIRCUIT BOARD 7 CHASSIS	80009	621-0083-09
A15	621-0083-10	B022732	B023706	POWER SUPPLY: CIRCUIT BOARD 7 CHASSIS	80009	621-0083-10
A15	621-0083-11	B023707	B023533	POWER SUPPLY: CIRCUIT BOARD 7 CHASSIS	80009	621-0083-11
A15	621-0083-12	B023534	B033899	POWER SUPPLY: CIRCUIT BOARD 7 CHASSIS	80009	621-0083-12
A15	621-0083-13	B033900	B034199	POWER SUPPLY: CIRCUIT BOARD 7 CHASSIS	80009	621-0083-13
A15	621-0083-14	B044200				
A15A1	----- -----			(PART OF A15)		
A16	119-2568-04			1ST CONVERTER A:	80009	119-2568-04
A16A1	----- -----			CIRCUIT BD ASSY:1ST CONVERTER		
A16A2	----- -----			CIRCUIT BD ASSY: 1ST MIXER INPUT		
				(PART OF A16)		
A17	119-2301-05	B010100	B010864	YIG BUFFER ASSY:	80009	119-2301-05
A17	119-2301-06	B010865		YIG BUFFER ASSY:2712	80009	119-2301-06
A17A1	----- -----			CKT BD SUBASSY:YIG BUFFER AMPLIFIER		
A18	672-1297-00	B010100	B010756	CIRCUIT BD ASSY:RF ATTN	80009	672-1297-00
A18	672-1297-01	B010757		CIRCUIT BD ASSY:RF ATTN	80009	672-1297-01
A18A1	----- -----			(PART OF A18) DIGITAL CONTROL		
A18A2	----- -----			(PART OF A18) RF		
A19	119-2206-00			OSCILLATOR,RF:1.9 TO 4.0 GHZ	80009	119-2206-00
A19A1	----- -----			CIRCUIT BD ASSY:YIG INTERFACE		
A21	670-9470-00	B010100	B010614	CIRCUIT BD ASSY:REF OSCILLATOR	80009	670-9470-00
A21	670-9470-01	B010615		CIRCUIT BD ASSY:REFERENCE OSCILLATOR	80009	670-9470-01
A21	670-9470-02		B034199			
A21	670-9470-02	B044200				
A22	671-0975-00	B010100	B023247	CIRCUIT BD ASSY:300HZ	80009	671-0975-00
A22	671-0975-01	B023248		CIRCUIT BD ASSY:300HZ	80009	671-0975-01
A23	671-1740-00	B010101	B010172	CIRCUIT BD ASSY:RF OPTION	80009	671-1740-00
A23	671-1740-01	B010173	B010695	CIRCUIT BD ASSY:RF OPTION	80009	671-1740-01
A23	671-1740-02	B010696	B011389	CIRCUIT BD ASSY:RF OPTION	80009	671-1740-02
A23	671-1740-03	B011390	B023247	CIRCUIT BD ASSY:RF OPTION	80009	671-1740-03
A23	671-1740-04	B023248		CIRCUIT BD ASSY:RF OPTION 14	80009	671-0975-01

Component No.	Tektronix Part No.	Serial/Assembly No. Effective	Dscont	Name & Description	Mfr. Code	Mfr. Part No.
A24	119-3889-00	B010100	B011381	TRACK GEN ASSY:ISO AMP,RF AMP,TG PHASE LL,T	80009	119-3889-00
A24	119-3889-01	B011382		TRACKING GEN AS:ISO AMP,RF AMP,TG PHASE LL,	80009	119-3889-01
A24	119-3889-02					
A24	119-3889-03					
A24	119-3889-04					
A24	119-3889-05		B034199			
A24	119-3889-06	B044200				
A24A1	671-1547-01		B034199	CIRCUIT BD ASSY:TG INTERFACE	80009	671-1547-01
A24A1	671-1547-02	B044200				
A24A2	671-1544-00			CIRCUIT BD ASSY:TG PHASE LOCK LOOP	80009	671-1544-00
A24A3	671-1543-00			CIRCUIT BD ASSY:TG ISOLATION AMP	80009	671-1543-00
A24A4	671-1541-00			CIRCUIT BD ASSY:TG RF AMPLIFIER	80009	671-1541-00
A25	671-1859-01			CIRCUIT BD ASSY:GPIB	80009	671-1859-01
A26	671-2013-00	B010100	B010172	CIRCUIT BD ASSY:RF OPTION 12	80009	671-2013-00
A26	671-2013-01	B010173	B010695	CIRCUIT BD ASSY:RF OPTION 12	80009	671-2013-01
A26	671-2013-02	B010696	B011389	CIRCUIT BD ASSY:RF OPTION 12	80009	671-2013-02
A26	671-2013-03	B011390	B023247	CIRCUIT BD ASSY:RF OPTION 12	80009	671-2013-03
A26	671-2013-04	B023248	B034199	CIRCUIT BD ASSY:RF OPTION 12	80009	671-2013-04
A26	671-2013-05	B044200		CIRCUIT BD ASSY:RF OPTION 12	80009	671-2013-05
A27	671-2004-00	B010100	B010185	CIRCUIT BD ASSY:LOG	80009	671-2004-00
A27	671-2004-01	B010186	B011344	CIRCUIT BD ASSY:LOG	80009	671-2004-01
A27	671-2004-02	B011345		CIRCUIT BD ASSY:LOG	80009	671-2004-02
A5	671-0974-05	B044200		CIRCUIT BD ASSY:SWEEP	80009	671-0974-03
A5C130	290-0944-00			CAP,FXD,ELCTLT:220UF,+50-20%,10V (MATCHED SET WITH A5C840)	55680	UVX1C221MPA
A5C150	283-0645-00			CAP,FXD,MICA DI:790PF,1%,300V	80009	283-0645-00
A5C161	283-5004-00			CAP,FXD,CER DI:0.1UF,10%,25V	80009	283-5004-00
A5C165	283-0672-00			CAP,FXD,MICA DI:200PF,1%,500V	80009	283-0672-00
A5C176	283-5004-00			CAP,FXD,CER DI:0.1UF,10%,25V	80009	283-5004-00
A5C210	283-5004-00			CAP,FXD,CER DI:0.1UF,10%,25V	80009	283-5004-00
A5C220	283-5002-00			CAP,FXD,CER DI:1000PF,10%,50V	80009	283-5002-00
A5C230	283-5001-00			CAP,FXD,CER DI:100PF,5%,50V	80009	283-5001-00
A5C231	283-5004-00			CAP,FXD,CER DI:0.1UF,10%,25V	80009	283-5004-00
A5C252	283-5001-00			CAP,FXD,CER DI:100PF,5%,50V	80009	283-5001-00
A5C253	290-5039-00			CAP,FXD,ALUM:10UF,20%,50V,6.3MM,SMD,16MM TA	80009	290-5039-00
A5C262	283-5004-00			CAP,FXD,CER DI:0.1UF,10%,25V	80009	283-5004-00
A5C310	283-5004-00			CAP,FXD,CER DI:0.1UF,10%,25V	80009	283-5004-00
A5C311	283-5004-00			CAP,FXD,CER DI:0.1UF,10%,25V	80009	283-5004-00
A5C322	283-5004-00			CAP,FXD,CER DI:0.1UF,10%,25V	80009	283-5004-00
A5C383	283-5004-00			CAP,FXD,CER DI:0.1UF,10%,25V	80009	283-5004-00
A5C384	283-5004-00			CAP,FXD,CER DI:0.1UF,10%,25V	80009	283-5004-00
A5C391	283-5004-00			CAP,FXD,CER DI:0.1UF,10%,25V	80009	283-5004-00
A5C410	283-5004-00			CAP,FXD,CER DI:0.1UF,10%,25V	80009	283-5004-00
A5C420	283-5004-00			CAP,FXD,CER DI:0.1UF,10%,25V	80009	283-5004-00
A5C421	283-5002-00			CAP,FXD,CER DI:1000PF,10%,50V	80009	283-5002-00
A5C430	283-5004-00			CAP,FXD,CER DI:0.1UF,10%,25V	80009	283-5004-00
A5C431	283-5004-00			CAP,FXD,CER DI:0.1UF,10%,25V	80009	283-5004-00
A5C475	283-5001-00			CAP,FXD,CER DI:100PF,5%,50V	80009	283-5001-00
A5C531	290-0944-00			CAP,FXD,ELCTLT:220UF,+50-20%,10V	55680	UVX1C221MPA
A5C553	283-5004-00			CAP,FXD,CER DI:0.1UF,10%,25V	80009	283-5004-00
A5C563	283-5004-00			CAP,FXD,CER DI:0.1UF,10%,25V	80009	283-5004-00
A5C564	283-5004-00			CAP,FXD,CER DI:0.1UF,10%,25V	80009	283-5004-00
A5C582	283-5004-00			CAP,FXD,CER DI:0.1UF,10%,25V	80009	283-5004-00
A5C583	283-5004-00			CAP,FXD,CER DI:0.1UF,10%,25V	80009	283-5004-00
A5C592	283-5004-00			CAP,FXD,CER DI:0.1UF,10%,25V	80009	283-5004-00
A5C611	283-5004-00			CAP,FXD,CER DI:0.1UF,10%,25V	80009	283-5004-00
A5C621	283-5004-00			CAP,FXD,CER DI:0.1UF,10%,25V	80009	283-5004-00
A5C631	283-5004-00			CAP,FXD,CER DI:0.1UF,10%,25V	80009	283-5004-00
A5C662	290-5039-00			CAP,FXD,ALUM:10UF,20%,50V,6.3MM,SMD,16MM TA PE & REEL.	80009	290-5039-00
A5C691	283-5004-00			CAP,FXD,CER DI:0.1UF,10%,25V	80009	283-5004-00
A5C720	290-0944-00			CAP,FXD,ELCTLT:220UF,+50-20%,10V	55680	UVX1C221MPA
A5C751	283-5002-00			CAP,FXD,CER DI:1000PF,10%,50V	80009	283-5002-00
A5C761	283-5004-00			CAP,FXD,CER DI:0.1UF,10%,25V	80009	283-5004-00
A5C762	283-5002-00			CAP,FXD,CER DI:1000PF,10%,50V	80009	283-5002-00
A5C773	283-5004-00			CAP,FXD,CER DI:0.1UF,10%,25V	80009	283-5004-00

Component No.	Tektronix Part No.	Serial/Assembly No. Effective	Dscont	Name & Description	Mfr. Code	Mfr. Part No.
A5C774	283-5002-00			CAP,FXD,CER DI:1000PF,10%,50V	80009	283-5002-00
A5C775	283-5002-00			CAP,FXD,CER DI:1000PF,10%,50V	80009	283-5002-00
A5C781	281-0267-00			CAP,VAR,CERAMIC:6-50PF,50V	80009	281-0267-00
A5C782	283-5008-00			CAP,FXD,CER DI:12PF,5%,50V	54583	C3216C0G1H120J
A5C790	283-5004-00			CAP,FXD,CER DI:0.1UF,10%,25V	80009	283-5004-00
A5C840	295-0199-00		B034199	CAP SET,MATCHED:(1) 10UF,1.5%,25V,(1) 0.1UF ,1.5%,100V,MATCHED (MATCHED SET WITH A5C130)	80009	295-0199-00
A5C840	295-0199-01	B044200				
A5C841	283-5004-00			CAP,FXD,CER DI:0.1UF,10%,25V	80009	283-5004-00
A5C841	283-5004-00		B034199			
A5C842	283-5004-00			CAP,FXD,CER DI:0.1UF,10%,25V	80009	283-5004-00
A5C842	283-5004-00		B034199			
A5C843	283-5004-00			CAP,FXD,CER DI:0.1UF,10%,25V	80009	283-5004-00
A5C843	283-5004-00		B034199			
A5C844	283-5004-00			CAP,FXD,CER DI:0.1UF,10%,25V	80009	283-5004-00
A5C844	283-5004-00		B034199			
A5C845	295-0199-00			CAP SET,MATCHED:(1) 10UF,1.5%,25V,(1) 0.1UF ,1.5%,100V,MATCHED	80009	295-0199-00
A5C845	295-0199-01	B044200				
A5C860	283-5004-00			CAP,FXD,CER DI:0.1UF,10%,25V	80009	283-5004-00
A5C870	283-5004-00			CAP,FXD,CER DI:0.1UF,10%,25V	80009	283-5004-00
A5C871	283-5004-00			CAP,FXD,CER DI:0.1UF,10%,25V	80009	283-5004-00
A5C872	283-5004-00			CAP,FXD,CER DI:0.1UF,10%,25V	80009	283-5004-00
A5C880	283-5004-00			CAP,FXD,CER DI:0.1UF,10%,25V	80009	283-5004-00
A5C940	283-5004-00			CAP,FXD,CER DI:0.1UF,10%,25V	80009	283-5004-00
A5C941	283-5004-00			CAP,FXD,CER DI:0.1UF,10%,25V	80009	283-5004-00
A5C960	283-5004-00			CAP,FXD,CER DI:0.1UF,10%,25V	80009	283-5004-00
A5C961	283-5004-00			CAP,FXD,CER DI:0.1UF,10%,25V	80009	283-5004-00
A5C970	283-5004-00			CAP,FXD,CER DI:0.1UF,10%,25V	80009	283-5004-00
A5C971	283-5004-00			CAP,FXD,CER DI:0.1UF,10%,25V	80009	283-5004-00
A5CR212	152-5004-00			DIODE,SIG:,ULTRA FAST;70V,0.15A,6NS,SER-PAI R;BAV99,SOT-23,8MM TR	25088	BAV99T
A5CR361	152-5004-00			DIODE,SIG:,ULTRA FAST;70V,0.15A,6NS,SER-PAI R;BAV99,SOT-23,8MM TR	25088	BAV99T
A5CR373	152-5004-00			DIODE,SIG:,ULTRA FAST;70V,0.15A,6NS,SER-PAI R;BAV99,SOT-23,8MM TR	25088	BAV99T
A5CR461	152-5004-00			DIODE,SIG:,ULTRA FAST;70V,0.15A,6NS,SER-PAI R;BAV99,SOT-23,8MM TR	25088	BAV99T
A5CR462	152-5004-00			DIODE,SIG:,ULTRA FAST;70V,0.15A,6NS,SER-PAI R;BAV99,SOT-23,8MM TR	25088	BAV99T
A5DS200	150-0097-00			LAMP,INCAND:6.3V,0.2A,#7381,WIRE LEADS	92966	7381
A5DS500	150-0097-00			LAMP,INCAND:6.3V,0.2A,#7381,WIRE LEADS	92966	7381
A5DS700	150-0097-00			LAMP,INCAND:6.3V,0.2A,#7381,WIRE LEADS	92966	7381
A5J480	131-2514-00			CONN,HDR::	00779	86479-1
A5J750	131-0265-00			CONN,RF PLUG::SMB,PCB,MALE,RTANG,50 OHM,0.3 81 H X 0.150 TAIL,0.043 DIA CTR COND,0.040 SQ TAIL	80009	131-0265-00
A5L783	108-5001-00			COIL,RF:FXD,70NH,+/-5%,Q=35,SRF 900MHZ, DCR 0.55 OHM, I MAX	80009	108-5001-00
A5L890	108-1262-00			COIL,RF:FXD,100UH,10%,Q=30,SRF 8.2MHZ,DCR 0 .23 OHM,I MAX 0.75ARADIAL LEAD	80009	108-1262-00
A5Q255	151-5001-00			TRANSISTOR,SIG:BIPOLAR,NPN;40V,200MA,300MHZ ,AMPLIFIER;MMBT3904L,TO-236/SOT-23,8MM T&R	80009	151-5001-00
A5Q351	151-5001-00			TRANSISTOR,SIG:BIPOLAR,NPN;40V,200MA,300MHZ ,AMPLIFIER;MMBT3904L,TO-236/SOT-23,8MM T&R	80009	151-5001-00
A5Q574	151-5001-00			TRANSISTOR,SIG:BIPOLAR,NPN;40V,200MA,300MHZ ,AMPLIFIER;MMBT3904L,TO-236/SOT-23,8MM T&R	80009	151-5001-00
A5Q663	151-5002-00			TRANSISTOR,SIG:JFET,N-CH;5V,75MA,60 OHM,SWI TCH;MMBF4392L,SOT-23,8MM T&R	80009	151-5002-00
A5Q664	151-5000-00			TRANSISTOR,SIG:BIPOLAR,PNP;40V,200MA,250MHZ ,AMPLIFIER;MMBT3906L,TO-236/SOT-23,8MM T&R	04713	MMBT3906LT1
A5Q685	151-5001-00			TRANSISTOR,SIG:BIPOLAR,NPN;40V,200MA,300MHZ ,AMPLIFIER;MMBT3904L,TO-236/SOT-23,8MM T&R	80009	151-5001-00

Component No.	Tektronix Part No.	Serial/Assembly No. Effective	Dscont	Name & Description	Mfr. Code	Mfr. Part No.
A5Q706	151-5001-00			TRANSISTOR,SIG:BIPOLAR,NPN;40V,200MA,300MHZ ,AMPLIFIER;MMBT3904L,TO-236/SOT-23,8MM T&R	80009	151-5001-00
A5Q707	151-5000-00			TRANSISTOR,SIG:BIPOLAR,PNP;40V,200MA,250MHZ ,AMPLIFIER;MMBT3906L,TO-236/SOT-23,8MM T&R	04713	MMBT3906LT1
A5R140	321-5017-00			RES,FXD:METAL FILM;825 OHM,1%,0.125W,TC=100 PPM;1206,T&R	80009	321-5017-00
A5R141	321-5047-00			RES,FXD:METAL FILM;100K OHM,1%,0.125W,TC=10 0 PPM;1206,T&R	80009	321-5047-00
A5R142	321-5047-00			RES,FXD:METAL FILM;100K OHM,1%,0.125W,TC=10 0 PPM;1206,T&R	80009	321-5047-00
A5R150	321-5047-00			RES,FXD:METAL FILM;100K OHM,1%,0.125W,TC=10 0 PPM;1206,T&R	80009	321-5047-00
A5R171	321-5049-00			RES,FXD:METAL FILM;1M OHM,1%,0.125W,TC=100 PPM;1206,T&R	80009	321-5049-00
A5R172	321-5041-00			RES,FXD:METAL FILM;82.5K OHM,1%,0.125W,TC=1 00 PPM;1206,T&R	80009	321-5041-00
A5R173	321-5035-00			RES,FXD:METAL FILM;27.4K OHM,1%,0.125W,TC=1 00 PPM;1206,T&R	80009	321-5035-00
A5R174	321-5041-00			RES,FXD:METAL FILM;82.5K OHM,1%,0.125W,TC=1 00 PPM;1206,T&R	80009	321-5041-00
A5R175	321-5041-00			RES,FXD:METAL FILM;82.5K OHM,1%,0.125W,TC=1 00 PPM;1206,T&R	80009	321-5041-00
A5R177	321-5047-00			RES,FXD:METAL FILM;100K OHM,1%,0.125W,TC=10 0 PPM;1206,T&R	80009	321-5047-00
A5R180	321-5047-00			RES,FXD:METAL FILM;100K OHM,1%,0.125W,TC=10 0 PPM;1206,T&R	80009	321-5047-00
A5R181	321-5047-00			RES,FXD:METAL FILM;100K OHM,1%,0.125W,TC=10 0 PPM;1206,T&R	80009	321-5047-00
A5R182	321-5047-00			RES,FXD:METAL FILM;100K OHM,1%,0.125W,TC=10 0 PPM;1206,T&R	80009	321-5047-00
A5R183	321-5047-00			RES,FXD:METAL FILM;100K OHM,1%,0.125W,TC=10 0 PPM;1206,T&R	80009	321-5047-00
A5R184	321-5047-00			RES,FXD:METAL FILM;100K OHM,1%,0.125W,TC=10 0 PPM;1206,T&R	80009	321-5047-00
A5R185	321-5047-00			RES,FXD:METAL FILM;100K OHM,1%,0.125W,TC=10 0 PPM;1206,T&R	80009	321-5047-00
A5R186	321-5048-00			RES,FXD:METAL FILM;332K OHM,1%,0.125W,TC=10 0 PPM;1206,T&R	80009	321-5048-00
A5R190	321-5048-00			RES,FXD:METAL FILM;332K OHM,1%,0.125W,TC=10 0 PPM;1206,T&R	80009	321-5048-00
A5R200	321-5018-00			RES,FXD:METAL FILM;1.0K OHM,1%,0.125W,TC=10 0 PPM;1206,T&R	80009	321-5018-00
A5R201	321-5047-00			RES,FXD:METAL FILM;100K OHM,1%,0.125W,TC=10 0 PPM;1206,T&R	80009	321-5047-00
A5R213	321-5047-00			RES,FXD:METAL FILM;100K OHM,1%,0.125W,TC=10 0 PPM;1206,T&R	80009	321-5047-00
A5R221	321-5037-00			RES,FXD:METAL FILM;39.2K OHM,1%,0.125W,TC=1 00 PPM;1206,T&R	80009	321-5037-00
A5R222	321-5038-00			RES,FXD:METAL FILM;47.5K OHM,1%,0.125W,TC=1 00 PPM;1206,T&R	80009	321-5038-00
A5R232	321-5018-00			RES,FXD:METAL FILM;1.0K OHM,1%,0.125W,TC=10 0 PPM;1206,T&R	80009	321-5018-00
A5R233	321-5022-00			RES,FXD:METAL FILM;2.21K OHM,1%,0.125W,TC=1 00 PPM;1206,T&R	80009	321-5022-00
A5R240	321-5030-00			RES,FXD:METAL FILM;10.0K OHM,1%,0.125W,TC=1 00 PPM;1206,T&R	80009	321-5030-00
A5R251	321-5030-00			RES,FXD:METAL FILM;10.0K OHM,1%,0.125W,TC=1 00 PPM;1206,T&R	80009	321-5030-00

Component No.	Tektronix Part No.	Serial/Assembly No. Effective	Dscont	Name & Description	Mfr. Code	Mfr. Part No.
A5R270	321-5025-00			RES,FXD:METAL FILM;3.92K OHM,1%,0.125W,TC=100 PPM;1206,T&R	80009	321-5025-00
A5R272	321-5005-00			RES,FXD:METAL FILM;27.4 OHM,1%,0.125W,TC=100 PPM;1206,T&R	80009	321-5005-00
A5R280	311-1225-00			RES,VAR,NONWW:TRMR,1K OHM,0.5W	80009	311-1225-00
A5R281	321-5049-00			RES,FXD:METAL FILM;1M OHM,1%,0.125W,TC=100 PPM;1206,T&R	80009	321-5049-00
A5R282	321-5049-00			RES,FXD:METAL FILM;1M OHM,1%,0.125W,TC=100 PPM;1206,T&R	80009	321-5049-00
A5R283	321-5047-00			RES,FXD:METAL FILM;100K OHM,1%,0.125W,TC=100 PPM;1206,T&R	80009	321-5047-00
A5R284	321-5047-00			RES,FXD:METAL FILM;100K OHM,1%,0.125W,TC=100 PPM;1206,T&R	80009	321-5047-00
A5R286	321-5025-00			RES,FXD:METAL FILM;3.92K OHM,1%,0.125W,TC=100 PPM;1206,T&R	80009	321-5025-00
A5R290	311-1466-00			RES,VAR,NONWW:TRMR,2K OHM,0.5W	32997	3386F-1-202
A5R293	321-5031-00			RES,FXD:METAL FILM;12.1K OHM,1%,0.125W,TC=100 PPM;1206,T&R	80009	321-5031-00
A5R300	321-5018-00			RES,FXD:METAL FILM;1.0K OHM,1%,0.125W,TC=100 PPM;1206,T&R	80009	321-5018-00
A5R301	321-5047-00			RES,FXD:METAL FILM;100K OHM,1%,0.125W,TC=100 PPM;1206,T&R	80009	321-5047-00
A5R340	321-5018-00			RES,FXD:METAL FILM;1.0K OHM,1%,0.125W,TC=100 PPM;1206,T&R	80009	321-5018-00
A5R341	321-5030-00			RES,FXD:METAL FILM;10.0K OHM,1%,0.125W,TC=100 PPM;1206,T&R	80009	321-5030-00
A5R342	321-5018-00			RES,FXD:METAL FILM;1.0K OHM,1%,0.125W,TC=100 PPM;1206,T&R	80009	321-5018-00
A5R343	321-5023-00			RES,FXD:METAL FILM;2.74K OHM,1%,0.125W,TC=100 PPM;1206,T&R	80009	321-5023-00
A5R344	321-5026-00			RES,FXD:METAL FILM;4.75K OHM,1%,0.125W,TC=100 PPM;1206,T&R	80009	321-5026-00
A5R350	321-5018-00			RES,FXD:METAL FILM;1.0K OHM,1%,0.125W,TC=100 PPM;1206,T&R	80009	321-5018-00
A5R352	321-5018-00			RES,FXD:METAL FILM;1.0K OHM,1%,0.125W,TC=100 PPM;1206,T&R	80009	321-5018-00
A5R353	321-5018-00			RES,FXD:METAL FILM;1.0K OHM,1%,0.125W,TC=100 PPM;1206,T&R	80009	321-5018-00
A5R360	321-5047-00			RES,FXD:METAL FILM;100K OHM,1%,0.125W,TC=100 PPM;1206,T&R	80009	321-5047-00
A5R361	321-5018-00			RES,FXD:METAL FILM;1.0K OHM,1%,0.125W,TC=100 PPM;1206,T&R	80009	321-5018-00
A5R370	321-5030-00			RES,FXD:METAL FILM;10.0K OHM,1%,0.125W,TC=100 PPM;1206,T&R	80009	321-5030-00
A5R371	321-5030-00			RES,FXD:METAL FILM;10.0K OHM,1%,0.125W,TC=100 PPM;1206,T&R	80009	321-5030-00
A5R372	321-5030-00			RES,FXD:METAL FILM;10.0K OHM,1%,0.125W,TC=100 PPM;1206,T&R	80009	321-5030-00
A5R374	321-5017-00			RES,FXD:METAL FILM;825 OHM,1%,0.125W,TC=100 PPM;1206,T&R	80009	321-5017-00
A5R380	321-5030-00			RES,FXD:METAL FILM;10.0K OHM,1%,0.125W,TC=100 PPM;1206,T&R	80009	321-5030-00
A5R381	321-5030-00			RES,FXD:METAL FILM;10.0K OHM,1%,0.125W,TC=100 PPM;1206,T&R	80009	321-5030-00
A5R382	321-5030-00			RES,FXD:METAL FILM;10.0K OHM,1%,0.125W,TC=100 PPM;1206,T&R	80009	321-5030-00
A5R430	321-5048-00			RES,FXD:METAL FILM;332K OHM,1%,0.125W,TC=100 PPM;1206,T&R	80009	321-5048-00

Component No.	Tektronix Part No.	Serial/Assembly No. Effective	Dscont	Name & Description	Mfr. Code	Mfr. Part No.
A5R431	321-5048-00			RES,FXD:METAL FILM;332K OHM,1%,0.125W,TC=100 PPM;1206,T&R	80009	321-5048-00
A5R441	321-5030-00			RES,FXD:METAL FILM;10.0K OHM,1%,0.125W,TC=100 PPM;1206,T&R	80009	321-5030-00
A5R450	321-5018-00			RES,FXD:METAL FILM;1.0K OHM,1%,0.125W,TC=100 PPM;1206,T&R	80009	321-5018-00
A5R451	321-5000-00			RES,FXD:METAL FILM;10 OHM,1%,0.125W,TC=100 PPM;1206,T&R	57668	MCR18EZHFW10E
A5R463	321-5018-00			RES,FXD:METAL FILM;1.0K OHM,1%,0.125W,TC=100 PPM;1206,T&R	80009	321-5018-00
A5R471	321-5030-00			RES,FXD:METAL FILM;10.0K OHM,1%,0.125W,TC=100 PPM;1206,T&R	80009	321-5030-00
A5R472	321-5049-00			RES,FXD:METAL FILM;1M OHM,1%,0.125W,TC=100 PPM;1206,T&R	80009	321-5049-00
A5R473	321-5047-00			RES,FXD:METAL FILM;100K OHM,1%,0.125W,TC=100 PPM;1206,T&R	80009	321-5047-00
A5R474	321-5049-00			RES,FXD:METAL FILM;1M OHM,1%,0.125W,TC=100 PPM;1206,T&R	80009	321-5049-00
A5R481	321-5017-00			RES,FXD:METAL FILM;825 OHM,1%,0.125W,TC=100 PPM;1206,T&R	80009	321-5017-00
A5R482	321-5047-00			RES,FXD:METAL FILM;100K OHM,1%,0.125W,TC=100 PPM;1206,T&R	80009	321-5047-00
A5R483	321-5025-00			RES,FXD:METAL FILM;3.92K OHM,1%,0.125W,TC=100 PPM;1206,T&R	80009	321-5025-00
A5R541	321-5018-00			RES,FXD:METAL FILM;1.0K OHM,1%,0.125W,TC=100 PPM;1206,T&R	80009	321-5018-00
A5R542	321-5018-00			RES,FXD:METAL FILM;1.0K OHM,1%,0.125W,TC=100 PPM;1206,T&R	80009	321-5018-00
A5R543	321-5022-00			RES,FXD:METAL FILM;2.21K OHM,1%,0.125W,TC=100 PPM;1206,T&R	80009	321-5022-00
A5R544	321-5018-00			RES,FXD:METAL FILM;1.0K OHM,1%,0.125W,TC=100 PPM;1206,T&R	80009	321-5018-00
A5R552	321-5032-00			RES,FXD:METAL FILM;15.0K OHM,1%,0.125W,TC=100 PPM;1206,T&R	80009	321-5032-00
A5R561	321-5018-00			RES,FXD:METAL FILM;1.0K OHM,1%,0.125W,TC=100 PPM;1206,T&R	80009	321-5018-00
A5R562	321-5018-00			RES,FXD:METAL FILM;1.0K OHM,1%,0.125W,TC=100 PPM;1206,T&R	80009	321-5018-00
A5R570	321-5030-00			RES,FXD:METAL FILM;10.0K OHM,1%,0.125W,TC=100 PPM;1206,T&R	80009	321-5030-00
A5R571	321-5049-00			RES,FXD:METAL FILM;1M OHM,1%,0.125W,TC=100 PPM;1206,T&R	80009	321-5049-00
A5R572	321-5018-00			RES,FXD:METAL FILM;1.0K OHM,1%,0.125W,TC=100 PPM;1206,T&R	80009	321-5018-00
A5R573	321-5018-00			RES,FXD:METAL FILM;1.0K OHM,1%,0.125W,TC=100 PPM;1206,T&R	80009	321-5018-00
A5R580	321-5018-00			RES,FXD:METAL FILM;1.0K OHM,1%,0.125W,TC=100 PPM;1206,T&R	80009	321-5018-00
A5R581	321-5018-00			RES,FXD:METAL FILM;1.0K OHM,1%,0.125W,TC=100 PPM;1206,T&R	80009	321-5018-00
A5R591	321-5009-00			RES,FXD:METAL FILM;182 OHM,1%,0.125W,TC=100 PPM;1206,T&R	80009	321-5009-00
A5R630	321-5018-00			RES,FXD:METAL FILM;1.0K OHM,1%,0.125W,TC=100 PPM;1206,T&R	80009	321-5018-00
A5R631	321-5047-00			RES,FXD:METAL FILM;100K OHM,1%,0.125W,TC=100 PPM;1206,T&R	80009	321-5047-00
A5R640	311-1225-00			RES,VAR,NONWW:TRMR,1K OHM,0.5W	80009	311-1225-00
A5R650	321-5020-00			RES,FXD:METAL FILM;1.5K OHM,1%,0.125W,TC=100 PPM;1206,T&R	80009	321-5020-00

Component No.	Tektronix Part No.	Serial/Assembly No. Effective	Dscont	Name & Description	Mfr. Code	Mfr. Part No.
A5R651	321-5033-00			RES,FXD:METAL FILM;18.2K OHM,1%,0.125W,TC=100 PPM;1206,T&R	80009	321-5033-00
A5R652	321-5030-00			RES,FXD:METAL FILM;10.0K OHM,1%,0.125W,TC=100 PPM;1206,T&R	80009	321-5030-00
A5R653	321-5027-00			RES,FXD:METAL FILM;5.62K OHM,1%,0.125W,TC=100 PPM;1206,T&R	80009	321-5027-00
A5R654	321-5024-00			RES,FXD:METAL FILM;3.32K OHM,1%,0.125W,TC=100 PPM;1206,T&R	80009	321-5024-00
A5R660	321-5038-00			RES,FXD:METAL FILM;47.5K OHM,1%,0.125W,TC=100 PPM;1206,T&R	80009	321-5038-00
A5R661	321-5040-00			RES,FXD:METAL FILM;68.1K OHM,1%,0.125W,TC=100 PPM;1206,T&R	80009	321-5040-00
A5R680	321-5026-00			RES,FXD:METAL FILM;4.75K OHM,1%,0.125W,TC=100 PPM;1206,T&R	80009	321-5026-00
A5R681	321-5018-00			RES,FXD:METAL FILM;1.0K OHM,1%,0.125W,TC=100 PPM;1206,T&R	80009	321-5018-00
A5R682	321-5018-00			RES,FXD:METAL FILM;1.0K OHM,1%,0.125W,TC=100 PPM;1206,T&R	80009	321-5018-00
A5R683	321-5030-00			RES,FXD:METAL FILM;10.0K OHM,1%,0.125W,TC=100 PPM;1206,T&R	80009	321-5030-00
A5R684	321-5030-00			RES,FXD:METAL FILM;10.0K OHM,1%,0.125W,TC=100 PPM;1206,T&R	80009	321-5030-00
A5R692	321-5030-00			RES,FXD:METAL FILM;10.0K OHM,1%,0.125W,TC=100 PPM;1206,T&R	80009	321-5030-00
A5R693	321-5029-00			RES,FXD:METAL FILM;8.25K OHM,1%,0.125W,TC=100 PPM;1206,T&R	80009	321-5029-00
A5R701	301-0560-00			RES,FXD,FILM:56 OHM,5%,0.5W	01121	EB5605
A5R702	301-0560-00			RES,FXD,FILM:56 OHM,5%,0.5W	01121	EB5605
A5R703	321-5030-00			RES,FXD:METAL FILM;10.0K OHM,1%,0.125W,TC=100 PPM;1206,T&R	80009	321-5030-00
A5R704	321-5030-00			RES,FXD:METAL FILM;10.0K OHM,1%,0.125W,TC=100 PPM;1206,T&R	80009	321-5030-00
A5R705	321-5018-00			RES,FXD:METAL FILM;1.0K OHM,1%,0.125W,TC=100 PPM;1206,T&R	80009	321-5018-00
A5R710	321-5026-00			RES,FXD:METAL FILM;4.75K OHM,1%,0.125W,TC=100 PPM;1206,T&R	80009	321-5026-00
A5R733	321-5047-00			RES,FXD:METAL FILM;100K OHM,1%,0.125W,TC=100 PPM;1206,T&R	80009	321-5047-00
A5R740	311-1227-00			RES,VAR,NONWW:TRMR,5K OHM,0.5W	80009	311-1227-00
A5R763	321-5004-00			RES,FXD:METAL FILM;22.1 OHM,1%,0.125W,TC=100 PPM;1206,T&R	80009	321-5004-00
A5R764	321-5044-00			RES,FXD:METAL FILM;56.2 OHM,1%,0.125W,TC=100 PPM;1206,T&R	01121	BCD56R2FT
A5R771	321-5000-00			RES,FXD:METAL FILM;10 OHM,1%,0.125W,TC=100 PPM;1206,T&R	57668	MCR18EZHFW10E
A5R780	321-5009-00			RES,FXD:METAL FILM;182 OHM,1%,0.125W,TC=100 PPM;1206,T&R	80009	321-5009-00
A5R990	321-5010-00			RES,FXD:METAL FILM;221 OHM,1%,0.125W,TC=100 PPM;1206,T&R	80009	321-5010-00
A5R991	321-5010-00			RES,FXD:METAL FILM;221 OHM,1%,0.125W,TC=100 PPM;1206,T&R	80009	321-5010-00
A5R992	321-5010-00			RES,FXD:METAL FILM;221 OHM,1%,0.125W,TC=100 PPM;1206,T&R	80009	321-5010-00
A5U150	156-5097-00			IC,MISC:CMOS,ANALOG MUX;8 CHANNEL;CD4051,SO 16.150	80009	156-5097-00
A5U160	156-5298-00			IC,LINEAR:BIPOLAR,VOLTAGE REGULATOR;POSITIVE,5V,100MA,5%;MC78L05ACD,SO8.150,TUBE	80009	156-5298-00
A5U170	156-5097-00			IC,MISC:CMOS,ANALOG MUX;8 CHANNEL;CD4051,SO 16.150	80009	156-5097-00

Component No.	Tektronix Part No.	Serial/Assembly No. Effective	Dscont	Name & Description	Mfr. Code	Mfr. Part No.
A5U211	156-5021-01			IC,DIGITAL:CMOS,REGISTER;8-STAGE SHIFT/STORAGE, 3-STATE;4094,SO16.150,16MM T&R	80009	156-5021-01
A5U225	156-5265-00			IC,DIGITAL:	80009	156-5265-00
A5U244	156-5095-01			IC,LINEAR:BIPOLAR,OP-AMP;LOW NOISE,HIGH OUTPUT DRIVE;NE5534D,SO8.150,12MM T&R	80009	156-5095-01
A5U260	156-5274-01			IC,MISC:CMOS,ANALOG SWITCH;QUAD;DG211,SO16.150,16MM T&R	80009	156-5274-01
A5U270	156-5352-00			IC,LINEAR:BIFET,OP-AMP;LOW OFFSET;LT1056C,SO8.150	80009	156-5352-00
A5U312	156-5021-01			IC,DIGITAL:CMOS,REGISTER;8-STAGE SHIFT/STORAGE, 3-STATE;4094,SO16.150,16MM T&R	80009	156-5021-01
A5U343	156-5095-01			IC,LINEAR:BIPOLAR,OP-AMP;LOW NOISE,HIGH OUTPUT DRIVE;NE5534D,SO8.150,12MM T&R	80009	156-5095-01
A5U374	156-5018-00			IC,LINEAR:BIPOLAR,OP-AMP;DUAL,SINGLE SUPPLY;LM358D,SO8.150,TUBE	80009	156-5018-00
A5U390	156-5299-00			IC,LINEAR:BIPOLAR,VOLTAGE REGULATOR;NEGATIVE,-5V,100MA,5%;MC79L05ACD,SO8.150,TUBE	80009	156-5299-00
A5U420	156-5694-00			MICROCKT,LINEAR:BIPOLAR,VIDEO SYNC SEPARATOR	80009	156-5694-00
A5U443	156-5274-01			IC,MISC:CMOS,ANALOG SWITCH;QUAD;DG211,SO16.150,16MM T&R	80009	156-5274-01
A5U452	156-5097-00			IC,MISC:CMOS,ANALOG MUX;8 CHANNEL;CD4051,SO16.150	80009	156-5097-00
A5U460	160-5714-00			MICROCKT,DGTL:STTL,PLD,FPLA,PRGM	80009	160-5714-00
A5U470	156-5119-00			IC,LINEAR:BIPOLAR,COMPARATOR;DUAL,OPEN COLLECTOR,80NS;LM319D,SO14.150,TUBE	80009	156-5119-00
A5U510	156-5110-00			IC,DIGITAL:LSTTL,COUNTER;SYNCH 4-BIT UP/DOWN BINARY;74LS169,SO16.150,TUBE	80009	156-5110-00
A5U530	156-5021-01			IC,DIGITAL:CMOS,REGISTER;8-STAGE SHIFT/STORAGE, 3-STATE;4094,SO16.150,16MM T&R	80009	156-5021-01
A5U540	156-5119-00			IC,LINEAR:BIPOLAR,COMPARATOR;DUAL,OPEN COLLECTOR,80NS;LM319D,SO14.150,TUBE	80009	156-5119-00
A5U560	156-5018-00			IC,LINEAR:BIPOLAR,OP-AMP;DUAL,SINGLE SUPPLY;LM358D,SO8.150,TUBE	80009	156-5018-00
A5U590	156-5298-00			IC,LINEAR:BIPOLAR,VOLTAGE REGULATOR;POSITIVE,5V,100MA,5%;MC78L05ACD,SO8.150,TUBE	80009	156-5298-00
A5U610	156-5021-01			IC,DIGITAL:CMOS,REGISTER;8-STAGE SHIFT/STORAGE, 3-STATE;4094,SO16.150,16MM T&R	80009	156-5021-01
A5U620	156-5110-00			IC,DIGITAL:LSTTL,COUNTER;SYNCH 4-BIT UP/DOWN BINARY;74LS169,SO16.150,TUBE	80009	156-5110-00
A5U630	156-5110-00			IC,DIGITAL:LSTTL,COUNTER;SYNCH 4-BIT UP/DOWN BINARY;74LS169,SO16.150,TUBE	80009	156-5110-00
A5U670	160-5715-00			MICROCKT,DGTL:STTL,PLD,FPLA,PRGM	80009	160-5715-00
A5U690	156-5095-01			IC,LINEAR:BIPOLAR,OP-AMP;LOW NOISE,HIGH OUTPUT DRIVE;NE5534D,SO8.150,12MM T&R	80009	156-5095-01
A5U730	156-5081-01			IC,DIGITAL:HCTMOS,GATE;HEX INVERTER;74HCT04,SO14.150,16MM T&R	80009	156-5081-01
A5U760	156-5280-00			IC,LINEAR:BIPOLAR,AMPLIFIER;RF AMP,20DB GAIN,600MHZ;NE5205AD,SO8.150	80009	156-5280-00
A5U770	156-3620-00			IC,LINEAR:BIPOLAR,DETECTOR;FM,WIDEBAND;SL1454DP,DIP08.3	80009	156-3620-00
A5W261	321-5051-00			RES,FXD:METAL FILM;0 OHM,1%,0.125W,TC=100 PPM;1206,T&R	80009	321-5051-00
A6	671-1923-01			CIRCUIT BD ASSY:FRONT PANEL	80009	671-1923-01
A6C130	283-5004-00			CAP,FXD,CER DI:0.1UF,10%,25V	80009	283-5004-00
A6C131	283-5004-00			CAP,FXD,CER DI:0.1UF,10%,25V	80009	283-5004-00
A6C140	283-5004-00			CAP,FXD,CER DI:0.1UF,10%,25V	80009	283-5004-00
A6C141	283-5004-00			CAP,FXD,CER DI:0.1UF,10%,25V	80009	283-5004-00
A6C180	283-5014-00			CAP,FXD,CER DI:330PF,5%,50V	80009	283-5014-00

Component No.	Tektronix Part No.	Serial/Assembly No. Effective	Dscont	Name & Description	Mfr. Code	Mfr. Part No.
A6C181	283-5014-00			CAP,FXD,CER DI:330PF,5%,50V	80009	283-5014-00
A6C190	283-5004-00			CAP,FXD,CER DI:0.1UF,10%,25V	80009	283-5004-00
A6C220	283-5004-00			CAP,FXD,CER DI:0.1UF,10%,25V	80009	283-5004-00
A6C240	283-5004-00			CAP,FXD,CER DI:0.1UF,10%,25V	80009	283-5004-00
A6C250	283-5004-00			CAP,FXD,CER DI:0.1UF,10%,25V	80009	283-5004-00
A6C280	283-5003-00			CAP,FXD,CER DI:0.01UF,10%,50V	80009	283-5003-00
A6C310	283-5004-00			CAP,FXD,CER DI:0.1UF,10%,25V	80009	283-5004-00
A6C330	283-0330-00			CAP,FXD,CER DI:100PF,5%,50V	80009	283-0330-00
A6C340	283-5004-00			CAP,FXD,CER DI:0.1UF,10%,25V	80009	283-5004-00
A6C341	283-5004-00			CAP,FXD,CER DI:0.1UF,10%,25V	80009	283-5004-00
A6C350	283-5004-00			CAP,FXD,CER DI:0.1UF,10%,25V	80009	283-5004-00
A6C351	283-5004-00			CAP,FXD,CER DI:0.1UF,10%,25V	80009	283-5004-00
A6C352	283-5004-00			CAP,FXD,CER DI:0.1UF,10%,25V	80009	283-5004-00
A6C360	283-5004-00			CAP,FXD,CER DI:0.1UF,10%,25V	80009	283-5004-00
A6C380	283-5003-00			CAP,FXD,CER DI:0.01UF,10%,50V	80009	283-5003-00
A6C390	283-5004-00			CAP,FXD,CER DI:0.1UF,10%,25V	80009	283-5004-00
A6C440	283-0330-00			CAP,FXD,CER DI:100PF,5%,50V	80009	283-0330-00
A6C460	283-5004-00			CAP,FXD,CER DI:0.1UF,10%,25V	80009	283-5004-00
A6C520	283-5004-00			CAP,FXD,CER DI:0.1UF,10%,25V	80009	283-5004-00
A6C540	283-5004-00			CAP,FXD,CER DI:0.1UF,10%,25V	80009	283-5004-00
A6C560	283-5004-00			CAP,FXD,CER DI:0.1UF,10%,25V	80009	283-5004-00
A6CR100	152-5000-00			SEMICOND DVC,DI:SW,SI,70V,COM CATHODE	80009	152-5000-00
A6CR300	152-5000-00			SEMICOND DVC,DI:SW,SI,70V,COM CATHODE	80009	152-5000-00
A6CR400	152-5000-00			SEMICOND DVC,DI:SW,SI,70V,COM CATHODE	80009	152-5000-00
A6DS800	150-5009-00			DIODE,OPTO:,LED;HI-EFFIC RED,626NM,3.4MCD A T IF=10MA;HLMP-6305-T21,YOKE LEAD BEND,12MM T&R	80009	150-5009-00
A6DS820	150-5009-00			DIODE,OPTO:,LED;HI-EFFIC RED,626NM,3.4MCD A T IF=10MA;HLMP-6305-T21,YOKE LEAD BEND,12MM T&R	80009	150-5009-00
A6DS821	150-5009-00			DIODE,OPTO:,LED;HI-EFFIC RED,626NM,3.4MCD A T IF=10MA;HLMP-6305-T21,YOKE LEAD BEND,12MM T&R	80009	150-5009-00
A6DS830	150-5009-00			DIODE,OPTO:,LED;HI-EFFIC RED,626NM,3.4MCD A T IF=10MA;HLMP-6305-T21,YOKE LEAD BEND,12MM T&R	80009	150-5009-00
A6DS860	150-5004-00			DIODE,OPTO:,LED;HI EFFIC RED,635NM,1.0 MCD @ IF=10MA,YOKE LEAD BEND;HLMP-6300-021,12MM TR	80009	150-5004-00
A6DS910	150-5009-00			DIODE,OPTO:,LED;HI-EFFIC RED,626NM,3.4MCD A T IF=10MA;HLMP-6305-T21,YOKE LEAD BEND,12MM T&R	80009	150-5009-00
A6DS920	150-5008-00			DIODE,OPTO:,LED;GRN,569NM,4.2MCD AT 10MA,28 DEG VIEW ANGL,YOKE LEAD BEND;HLMP-6505-T21	50434	HLMP-6505 OPT21
A6DS921	150-5009-00			DIODE,OPTO:,LED;HI-EFFIC RED,626NM,3.4MCD A T IF=10MA;HLMP-6305-T21,YOKE LEAD BEND,12MM T&R	80009	150-5009-00
A6DS922	150-5008-00			DIODE,OPTO:,LED;GRN,569NM,4.2MCD AT 10MA,28 DEG VIEW ANGL,YOKE LEAD BEND;HLMP-6505-T21	50434	HLMP-6505 OPT21
A6DS930	150-5009-00			DIODE,OPTO:,LED;HI-EFFIC RED,626NM,3.4MCD A T IF=10MA;HLMP-6305-T21,YOKE LEAD BEND,12MM T&R	80009	150-5009-00
A6DS931	150-5008-00			DIODE,OPTO:,LED;GRN,569NM,4.2MCD AT 10MA,28 DEG VIEW ANGL,YOKE LEAD BEND;HLMP-6505-T21	50434	HLMP-6505 OPT21
A6DS940	150-5009-00			DIODE,OPTO:,LED;HI-EFFIC RED,626NM,3.4MCD A T IF=10MA;HLMP-6305-T21,YOKE LEAD BEND,12MM T&R	80009	150-5009-00

Component No.	Tektronix Part No.	Serial/Assembly No. Effective	Dscont	Name & Description	Mfr. Code	Mfr. Part No.
A6DS941	150-5008-00			DIODE,OPTO:,LED;GRN,569NM,4.2MCD AT 10MA,28 DEG VIEW ANGL,YOKE LEAD BEND;HLMP-6505-T21	50434	HLMP-6505 OPT21
A6DS950	150-5009-00			DIODE,OPTO:,LED;HI-EFFIC RED,626NM,3.4MCD A T IF=10MA;HLMP-6305-T21,YOKE LEAD BEND,12MM T&R	80009	150-5009-00
A6DS951	150-5009-00			DIODE,OPTO:,LED;HI-EFFIC RED,626NM,3.4MCD A T IF=10MA;HLMP-6305-T21,YOKE LEAD BEND,12MM T&R	80009	150-5009-00
A6DS960	150-5009-00			DIODE,OPTO:,LED;HI-EFFIC RED,626NM,3.4MCD A T IF=10MA;HLMP-6305-T21,YOKE LEAD BEND,12MM T&R	80009	150-5009-00
A6DS961	150-5009-00			DIODE,OPTO:,LED;HI-EFFIC RED,626NM,3.4MCD A T IF=10MA;HLMP-6305-T21,YOKE LEAD BEND,12MM T&R	80009	150-5009-00
A6DS980	150-5008-00			DIODE,OPTO:,LED;GRN,569NM,4.2MCD AT 10MA,28 DEG VIEW ANGL,YOKE LEAD BEND;HLMP-6505-T21	50434	HLMP-6505 OPT21
A6J360	131-1857-00			CONN,HDR:PCB,;MALE,STR,1 X 36,0.1 CTR,0.230 MLG X 0.100 TAIL,GOLD;,,	58050	082-3644-SS10
A6J380	131-1857-00			CONN,HDR:PCB,;MALE,STR,1 X 36,0.1 CTR,0.230 MLG X 0.100 TAIL,GOLD;,,	58050	082-3644-SS10
A6J480	131-1857-00			CONN,HDR:PCB,;MALE,STR,1 X 36,0.1 CTR,0.230 MLG X 0.100 TAIL,GOLD;,,	58050	082-3644-SS10
A6J550	131-2514-00			CONN,HDR::	00779	86479-1
A6Q100	151-5000-00			TRANSISTOR,SIG:BIPOLAR,PNP;40V,200MA,250MHZ ,AMPLIFIER;MMBT3906L,TO-236/SOT-23,8MM T&R	04713	MMBT3906LT1
A6Q200	151-5000-00			TRANSISTOR,SIG:BIPOLAR,PNP;40V,200MA,250MHZ ,AMPLIFIER;MMBT3906L,TO-236/SOT-23,8MM T&R	04713	MMBT3906LT1
A6Q201	151-5000-00			TRANSISTOR,SIG:BIPOLAR,PNP;40V,200MA,250MHZ ,AMPLIFIER;MMBT3906L,TO-236/SOT-23,8MM T&R	04713	MMBT3906LT1
A6Q280	151-5001-00			TRANSISTOR,SIG:BIPOLAR,NPN;40V,200MA,300MHZ ,AMPLIFIER;MMBT3904L,TO-236/SOT-23,8MM T&R	80009	151-5001-00
A6Q300	151-5000-00			TRANSISTOR,SIG:BIPOLAR,PNP;40V,200MA,250MHZ ,AMPLIFIER;MMBT3906L,TO-236/SOT-23,8MM T&R	04713	MMBT3906LT1
A6Q380	151-5001-00			TRANSISTOR,SIG:BIPOLAR,NPN;40V,200MA,300MHZ ,AMPLIFIER;MMBT3904L,TO-236/SOT-23,8MM T&R	80009	151-5001-00
A6Q400	151-5000-00			TRANSISTOR,SIG:BIPOLAR,PNP;40V,200MA,250MHZ ,AMPLIFIER;MMBT3906L,TO-236/SOT-23,8MM T&R	04713	MMBT3906LT1
A6Q510	151-5000-00			TRANSISTOR,SIG:BIPOLAR,PNP;40V,200MA,250MHZ ,AMPLIFIER;MMBT3906L,TO-236/SOT-23,8MM T&R	04713	MMBT3906LT1
A6R100	321-5034-00			RES,FXD:METAL FILM;22.1K OHM,1%,0.125W,TC=1 00 PPM;1206,T&R	80009	321-5034-00
A6R110	321-5034-00			RES,FXD:METAL FILM;22.1K OHM,1%,0.125W,TC=1 00 PPM;1206,T&R	80009	321-5034-00
A6R130	321-5030-00			RES,FXD:METAL FILM;10.0K OHM,1%,0.125W,TC=1 00 PPM;1206,T&R	80009	321-5030-00
A6R140	321-5030-00			RES,FXD:METAL FILM;10.0K OHM,1%,0.125W,TC=1 00 PPM;1206,T&R	80009	321-5030-00
A6R150	321-5047-00			RES,FXD:METAL FILM;100K OHM,1%,0.125W,TC=10 0 PPM;1206,T&R	80009	321-5047-00
A6R180	321-5017-00			RES,FXD:METAL FILM;825 OHM,1%,0.125W,TC=100 PPM;1206,T&R	80009	321-5017-00
A6R200	321-5047-00			RES,FXD:METAL FILM;100K OHM,1%,0.125W,TC=10 0 PPM;1206,T&R	80009	321-5047-00
A6R201	321-5034-00			RES,FXD:METAL FILM;22.1K OHM,1%,0.125W,TC=1 00 PPM;1206,T&R	80009	321-5034-00
A6R210	321-5034-00			RES,FXD:METAL FILM;22.1K OHM,1%,0.125W,TC=1 00 PPM;1206,T&R	80009	321-5034-00
A6R211	321-5047-00			RES,FXD:METAL FILM;100K OHM,1%,0.125W,TC=10 0 PPM;1206,T&R	80009	321-5047-00

Component No.	Tektronix Part No.	Serial/Assembly No. Effective	Dscont	Name & Description	Mfr. Code	Mfr. Part No.
A6R212	321-5047-00			RES,FXD:METAL FILM;100K OHM,1%,0.125W,TC=100 PPM;1206,T&R	80009	321-5047-00
A6R220	321-5047-00			RES,FXD:METAL FILM;100K OHM,1%,0.125W,TC=100 PPM;1206,T&R	80009	321-5047-00
A6R230	321-5047-00			RES,FXD:METAL FILM;100K OHM,1%,0.125W,TC=100 PPM;1206,T&R	80009	321-5047-00
A6R240	321-5047-00			RES,FXD:METAL FILM;100K OHM,1%,0.125W,TC=100 PPM;1206,T&R	80009	321-5047-00
A6R250	321-5047-00			RES,FXD:METAL FILM;100K OHM,1%,0.125W,TC=100 PPM;1206,T&R	80009	321-5047-00
A6R280	321-5047-00			RES,FXD:METAL FILM;100K OHM,1%,0.125W,TC=100 PPM;1206,T&R	80009	321-5047-00
A6R281	321-5030-00			RES,FXD:METAL FILM;10.0K OHM,1%,0.125W,TC=100 PPM;1206,T&R	80009	321-5030-00
A6R300	321-5034-00			RES,FXD:METAL FILM;22.1K OHM,1%,0.125W,TC=100 PPM;1206,T&R	80009	321-5034-00
A6R301	321-5034-00			RES,FXD:METAL FILM;22.1K OHM,1%,0.125W,TC=100 PPM;1206,T&R	80009	321-5034-00
A6R302	321-5034-00			RES,FXD:METAL FILM;22.1K OHM,1%,0.125W,TC=100 PPM;1206,T&R	80009	321-5034-00
A6R310	321-5034-00			RES,FXD:METAL FILM;22.1K OHM,1%,0.125W,TC=100 PPM;1206,T&R	80009	321-5034-00
A6R340	321-5049-00			RES,FXD:METAL FILM;1M OHM,1%,0.125W,TC=100 PPM;1206,T&R	80009	321-5049-00
A6R341	321-5049-00			RES,FXD:METAL FILM;1M OHM,1%,0.125W,TC=100 PPM;1206,T&R	80009	321-5049-00
A6R350	321-5049-00			RES,FXD:METAL FILM;1M OHM,1%,0.125W,TC=100 PPM;1206,T&R	80009	321-5049-00
A6R351	321-5049-00			RES,FXD:METAL FILM;1M OHM,1%,0.125W,TC=100 PPM;1206,T&R	80009	321-5049-00
A6R352	321-5047-00			RES,FXD:METAL FILM;100K OHM,1%,0.125W,TC=100 PPM;1206,T&R	80009	321-5047-00
A6R380	321-5047-00			RES,FXD:METAL FILM;100K OHM,1%,0.125W,TC=100 PPM;1206,T&R	80009	321-5047-00
A6R381	321-5030-00			RES,FXD:METAL FILM;10.0K OHM,1%,0.125W,TC=100 PPM;1206,T&R	80009	321-5030-00
A6R390	321-5011-00			RES,FXD:METAL FILM;274 OHM,1%,0.125W,TC=100 PPM;1206,T&R	80009	321-5011-00
A6R400	321-5034-00			RES,FXD:METAL FILM;22.1K OHM,1%,0.125W,TC=100 PPM;1206,T&R	80009	321-5034-00
A6R401	321-5034-00			RES,FXD:METAL FILM;22.1K OHM,1%,0.125W,TC=100 PPM;1206,T&R	80009	321-5034-00
A6R441	321-5024-00			RES,FXD:METAL FILM;3.32K OHM,1%,0.125W,TC=100 PPM;1206,T&R	80009	321-5024-00
A6R442	321-5026-00			RES,FXD:METAL FILM;4.75K OHM,1%,0.125W,TC=100 PPM;1206,T&R	80009	321-5026-00
A6R443	321-5026-00			RES,FXD:METAL FILM;4.75K OHM,1%,0.125W,TC=100 PPM;1206,T&R	80009	321-5026-00
A6R450	321-5030-00			RES,FXD:METAL FILM;10.0K OHM,1%,0.125W,TC=100 PPM;1206,T&R	80009	321-5030-00
A6R451	321-5026-00			RES,FXD:METAL FILM;4.75K OHM,1%,0.125W,TC=100 PPM;1206,T&R	80009	321-5026-00
A6R460	321-5014-00			RES,FXD:METAL FILM;475 OHM,1%,0.125W,TC=100 PPM;1206,T&R	80009	321-5014-00
A6R461	321-5014-00			RES,FXD:METAL FILM;475 OHM,1%,0.125W,TC=100 PPM;1206,T&R	80009	321-5014-00
A6R480	321-5018-00			RES,FXD:METAL FILM;1.0K OHM,1%,0.125W,TC=100 PPM;1206,T&R	80009	321-5018-00

Component No.	Tektronix Part No.	Serial/Assembly No. Effective	Dscont	Name & Description	Mfr. Code	Mfr. Part No.
A6R481	321-5011-00			RES,FXD:METAL FILM;274 OHM,1%,0.125W,TC=100 PPM;1206,T&R	80009	321-5011-00
A6R482	321-5011-00			RES,FXD:METAL FILM;274 OHM,1%,0.125W,TC=100 PPM;1206,T&R	80009	321-5011-00
A6R483	321-5047-00			RES,FXD:METAL FILM;100K OHM,1%,0.125W,TC=10 0 PPM;1206,T&R	80009	321-5047-00
A6R490	321-5011-00			RES,FXD:METAL FILM;274 OHM,1%,0.125W,TC=100 PPM;1206,T&R	80009	321-5011-00
A6R491	321-5011-00			RES,FXD:METAL FILM;274 OHM,1%,0.125W,TC=100 PPM;1206,T&R	80009	321-5011-00
A6R492	321-5011-00			RES,FXD:METAL FILM;274 OHM,1%,0.125W,TC=100 PPM;1206,T&R	80009	321-5011-00
A6R493	321-5047-00			RES,FXD:METAL FILM;100K OHM,1%,0.125W,TC=10 0 PPM;1206,T&R	80009	321-5047-00
A6R500	321-5047-00			RES,FXD:METAL FILM;100K OHM,1%,0.125W,TC=10 0 PPM;1206,T&R	80009	321-5047-00
A6R510	321-5034-00			RES,FXD:METAL FILM;22.1K OHM,1%,0.125W,TC=1 00 PPM;1206,T&R	80009	321-5034-00
A6R511	321-5034-00			RES,FXD:METAL FILM;22.1K OHM,1%,0.125W,TC=1 00 PPM;1206,T&R	80009	321-5034-00
A6R620	321-5011-00			RES,FXD:METAL FILM;274 OHM,1%,0.125W,TC=100 PPM;1206,T&R	80009	321-5011-00
A6R621	321-5011-00			RES,FXD:METAL FILM;274 OHM,1%,0.125W,TC=100 PPM;1206,T&R	80009	321-5011-00
A6R622	321-5011-00			RES,FXD:METAL FILM;274 OHM,1%,0.125W,TC=100 PPM;1206,T&R	80009	321-5011-00
A6R623	321-5011-00			RES,FXD:METAL FILM;274 OHM,1%,0.125W,TC=100 PPM;1206,T&R	80009	321-5011-00
A6R630	321-5011-00			RES,FXD:METAL FILM;274 OHM,1%,0.125W,TC=100 PPM;1206,T&R	80009	321-5011-00
A6R631	321-5011-00			RES,FXD:METAL FILM;274 OHM,1%,0.125W,TC=100 PPM;1206,T&R	80009	321-5011-00
A6R632	321-5011-00			RES,FXD:METAL FILM;274 OHM,1%,0.125W,TC=100 PPM;1206,T&R	80009	321-5011-00
A6R633	321-5011-00			RES,FXD:METAL FILM;274 OHM,1%,0.125W,TC=100 PPM;1206,T&R	80009	321-5011-00
A6R634	321-5011-00			RES,FXD:METAL FILM;274 OHM,1%,0.125W,TC=100 PPM;1206,T&R	80009	321-5011-00
A6R635	321-5011-00			RES,FXD:METAL FILM;274 OHM,1%,0.125W,TC=100 PPM;1206,T&R	80009	321-5011-00
A6R636	321-5011-00			RES,FXD:METAL FILM;274 OHM,1%,0.125W,TC=100 PPM;1206,T&R	80009	321-5011-00
A6R637	321-5011-00			RES,FXD:METAL FILM;274 OHM,1%,0.125W,TC=100 PPM;1206,T&R	80009	321-5011-00
A6R640	321-5011-00			RES,FXD:METAL FILM;274 OHM,1%,0.125W,TC=100 PPM;1206,T&R	80009	321-5011-00
A6R641	321-5011-00			RES,FXD:METAL FILM;274 OHM,1%,0.125W,TC=100 PPM;1206,T&R	80009	321-5011-00
A6R642	321-5011-00			RES,FXD:METAL FILM;274 OHM,1%,0.125W,TC=100 PPM;1206,T&R	80009	321-5011-00
A6R643	321-5011-00			RES,FXD:METAL FILM;274 OHM,1%,0.125W,TC=100 PPM;1206,T&R	80009	321-5011-00
A6R680	321-5011-00			RES,FXD:METAL FILM;274 OHM,1%,0.125W,TC=100 PPM;1206,T&R	80009	321-5011-00
A6SW260	311-2320-00			ENCODER,DIGITAL:INCREMENTAL,50PPR,50 DETENT ,QUAD OUTPUT,LOC LUG AT 9 O'CLOCK	TK1869	LA22661
A6U130	156-5080-00			IC,DIGITAL:CMOS,REGISTER;8-STAGE STATIC SHI FT REGISTER;4021B,SO16.150,TUBE	80009	156-5080-00
A6U135	156-5265-00			IC,DIGITAL:	80009	156-5265-00

Component No.	Tektronix Part No.	Serial/Assembly No. Effective	Dscont	Name & Description	Mfr. Code	Mfr. Part No.
A6U140	156-5080-00			IC,DIGITAL:CMOS,REGISTER;8-STAGE STATIC SHIFT REGISTER;4021B,SO16.150,TUBE	80009	156-5080-00
A6U190	156-5037-00			IC,DIGITAL:LSTTL,SCHMITT TRIG;HEX INV;74LS14,SO14.150,TUBE	80009	156-5037-00
A6U250	156-5098-00			IC,DIGITAL:HCTCMOS,GATE;QUAD 2-INPUT NAND;74HCT00,SO14.150,TUBE	80009	156-5098-00
A6U310	156-5080-00			IC,DIGITAL:CMOS,REGISTER;8-STAGE STATIC SHIFT REGISTER;4021B,SO16.150,TUBE	80009	156-5080-00
A6U320	156-5145-00			IC,DIGITAL:HCTCMOS,FLIP FLOP;DUAL D-TYPE;74HCT74,SO14.150,TUBE	80009	156-5145-00
A6U340	156-5145-00			IC,DIGITAL:HCTCMOS,FLIP FLOP;DUAL D-TYPE;74HCT74,SO14.150,TUBE	80009	156-5145-00
A6U350	156-5265-00			IC,DIGITAL:	80009	156-5265-00
A6U450	156-5079-00			IC,DIGITAL:LSTTL,BUFFER;QUAD BUS, 3-STATE;74LS125,SO14.150,TUBE	80009	156-5079-00
A6U490	156-5254-00			IC,DIGITAL:HCTCMOS,REGISTER;8-STAGE SHIFT AND STORE BUS REGISTER;74HCT4094,SO16.150,TUBE	80009	156-5254-00
A6U620	156-5254-00			IC,DIGITAL:HCTCMOS,REGISTER;8-STAGE SHIFT AND STORE BUS REGISTER;74HCT4094,SO16.150,TUBE	80009	156-5254-00
A6U640	156-5254-00			IC,DIGITAL:HCTCMOS,REGISTER;8-STAGE SHIFT AND STORE BUS REGISTER;74HCT4094,SO16.150,TUBE	80009	156-5254-00
A7	671-1674-00	B010100	B011149	CIRCUIT BD ASSY:LOG AMP	80009	671-1674-00
A7	671-1674-01	B011150	B011344	CIRCUIT BD ASSY:LOG AMP	80009	671-1674-01
A7	671-1674-02	B011345		CIRCUIT BD ASSY:LOG AMP	80009	671-1674-02
A7C100	283-5004-00			CAP,FXD,CER DI:0.1UF,10%,25V	80009	283-5004-00
A7C110	283-5004-00			CAP,FXD,CER DI:0.1UF,10%,25V	80009	283-5004-00
A7C111	283-5016-00			CAP,FXD,CER DI:1UF,10%,50V	80009	283-5016-00
A7C120	283-5004-00			CAP,FXD,CER DI:0.1UF,10%,25V	80009	283-5004-00
A7C130	283-5002-00			CAP,FXD,CER DI:1000PF,10%,50V	80009	283-5002-00
A7C152	283-5004-00			CAP,FXD,CER DI:0.1UF,10%,25V	80009	283-5004-00
A7C170	283-5004-00			CAP,FXD,CER DI:0.1UF,10%,25V	80009	283-5004-00
A7C171	283-5004-00			CAP,FXD,CER DI:0.1UF,10%,25V	80009	283-5004-00
A7C190	283-5004-00			CAP,FXD,CER DI:0.1UF,10%,25V	80009	283-5004-00
A7C191	283-5004-00			CAP,FXD,CER DI:0.1UF,10%,25V	80009	283-5004-00
A7C200	283-5016-00			CAP,FXD,CER DI:1UF,10%,50V	80009	283-5016-00
A7C210	283-5016-00			CAP,FXD,CER DI:1UF,10%,50V	80009	283-5016-00
A7C211	283-5004-00			CAP,FXD,CER DI:0.1UF,10%,25V	80009	283-5004-00
A7C212	283-5002-00			CAP,FXD,CER DI:1000PF,10%,50V	80009	283-5002-00
A7C213	283-5004-00			CAP,FXD,CER DI:0.1UF,10%,25V	80009	283-5004-00
A7C230	283-5004-00			CAP,FXD,CER DI:0.1UF,10%,25V	80009	283-5004-00
A7C231	283-5004-00			CAP,FXD,CER DI:0.1UF,10%,25V	80009	283-5004-00
A7C232	283-5004-00			CAP,FXD,CER DI:0.1UF,10%,25V	80009	283-5004-00
A7C233	283-5004-00			CAP,FXD,CER DI:0.1UF,10%,25V	80009	283-5004-00
A7C240	283-5004-00			CAP,FXD,CER DI:0.1UF,10%,25V	80009	283-5004-00
A7C241	283-5002-00			CAP,FXD,CER DI:1000PF,10%,50V	80009	283-5002-00
A7C242	283-5002-00			CAP,FXD,CER DI:1000PF,10%,50V	80009	283-5002-00
A7C243	283-5014-00			CAP,FXD,CER DI:330PF,5%,50V	80009	283-5014-00
A7C250	283-5025-00			CAP,FXD,CER DI:220PF,5%,50V	80009	283-5025-00
A7C251	283-5004-00			CAP,FXD,CER DI:0.1UF,10%,25V	80009	283-5004-00
A7C252	283-5004-00			CAP,FXD,CER DI:0.1UF,10%,25V	80009	283-5004-00
A7C253	283-5004-00			CAP,FXD,CER DI:0.1UF,10%,25V	80009	283-5004-00
A7C254	283-5004-00			CAP,FXD,CER DI:0.1UF,10%,25V	80009	283-5004-00
A7C260	283-5004-00			CAP,FXD,CER DI:0.1UF,10%,25V	80009	283-5004-00
A7C270	283-5004-00			CAP,FXD,CER DI:0.1UF,10%,25V	80009	283-5004-00
A7C280	281-0298-00			CAP,VAR,CER DI:6-50PF	51406	TZ03Z500YR
A7C281	283-5004-00			CAP,FXD,CER DI:0.1UF,10%,25V	80009	283-5004-00

Component No.	Tektronix Part No.	Serial/Assembly No. Effective	Dscont	Name & Description	Mfr. Code	Mfr. Part No.
A7C282	283-5004-00			CAP,FXD,CER DI:0.1UF,10%,25V	80009	283-5004-00
A7C283	283-5004-00			CAP,FXD,CER DI:0.1UF,10%,25V	80009	283-5004-00
A7C290	283-5004-00			CAP,FXD,CER DI:0.1UF,10%,25V	80009	283-5004-00
A7C291	283-5004-00			CAP,FXD,CER DI:0.1UF,10%,25V	80009	283-5004-00
A7C300	283-5004-00			CAP,FXD,CER DI:0.1UF,10%,25V	80009	283-5004-00
A7C301	283-5004-00			CAP,FXD,CER DI:0.1UF,10%,25V	80009	283-5004-00
A7C320	283-5004-00			CAP,FXD,CER DI:0.1UF,10%,25V	80009	283-5004-00
A7C321	283-5004-00			CAP,FXD,CER DI:0.1UF,10%,25V	80009	283-5004-00
A7C322	283-5004-00			CAP,FXD,CER DI:0.1UF,10%,25V	80009	283-5004-00
A7C330	283-5004-00			CAP,FXD,CER DI:0.1UF,10%,25V	80009	283-5004-00
A7C340	283-5004-00			CAP,FXD,CER DI:0.1UF,10%,25V	80009	283-5004-00
A7C350	283-5004-00			CAP,FXD,CER DI:0.1UF,10%,25V	80009	283-5004-00
A7C353	283-5000-00			CAP,FXD,CER DI:10PF,5%,50V	80009	283-5000-00
A7C354	283-5011-00			CAP,FXD,CER DI:33PF,5%,50V	95275	VJ1206A330JXA
A7C355	283-5011-00			CAP,FXD,CER DI:33PF,5%,50V	95275	VJ1206A330JXA
A7C356	283-5001-00			CAP,FXD,CER DI:100PF,5%,50V	80009	283-5001-00
A7C357	281-0298-00			CAP,VAR,CER DI:6-50PF	51406	TZ03Z500YR
A7C360	290-0943-00			CAP,FXD,ELCTLT:47UF,+50-20%,25V	55680	UVX1V470MPA
A7C361	283-5004-00			CAP,FXD,CER DI:0.1UF,10%,25V	80009	283-5004-00
A7C362	283-5004-00			CAP,FXD,CER DI:0.1UF,10%,25V	80009	283-5004-00
A7C363	290-0944-00			CAP,FXD,ELCTLT:220UF,+50-20%,10V	55680	UVX1C221MPA
A7C370	283-5004-00			CAP,FXD,CER DI:0.1UF,10%,25V	80009	283-5004-00
A7C380	283-5025-00			CAP,FXD,CER DI:220PF,5%,50V	80009	283-5025-00
A7C381	283-5001-00			CAP,FXD,CER DI:100PF,5%,50V	80009	283-5001-00
A7C382	283-5027-00			CAP,FXD,CER DI:470PF,5%,50V	54583	
A7C383	283-5022-00			CAP,FXD,CER DI:47PF,5%,50V	54583	
A7C384	283-5049-00			CAP,FXD,CER DI:180PF,5%,50V	95275	VJ1206A181JXA
A7C385	283-5011-00			CAP,FXD,CER DI:33PF,5%,50V	95275	VJ1206A330JXA
A7C386	283-5004-00			CAP,FXD,CER DI:0.1UF,10%,25V	80009	283-5004-00
A7C387	283-5025-00			CAP,FXD,CER DI:220PF,5%,50V	80009	283-5025-00
A7C390	283-5004-00			CAP,FXD,CER DI:0.1UF,10%,25V	80009	283-5004-00
A7C391	283-5004-00			CAP,FXD,CER DI:0.1UF,10%,25V	80009	283-5004-00
A7C392	281-0298-00			CAP,VAR,CER DI:6-50PF	51406	TZ03Z500YR
A7C400	283-5004-00			CAP,FXD,CER DI:0.1UF,10%,25V	80009	283-5004-00
A7C401	283-5004-00			CAP,FXD,CER DI:0.1UF,10%,25V	80009	283-5004-00
A7C402	283-5004-00			CAP,FXD,CER DI:0.1UF,10%,25V	80009	283-5004-00
A7C403	283-5004-00			CAP,FXD,CER DI:0.1UF,10%,25V	80009	283-5004-00
A7C404	283-5004-00			CAP,FXD,CER DI:0.1UF,10%,25V	80009	283-5004-00
A7C440	283-5004-00			CAP,FXD,CER DI:0.1UF,10%,25V	80009	283-5004-00
A7C441	283-5004-00			CAP,FXD,CER DI:0.1UF,10%,25V	80009	283-5004-00
A7C442	283-5004-00			CAP,FXD,CER DI:0.1UF,10%,25V	80009	283-5004-00
A7C450	283-5004-00			CAP,FXD,CER DI:0.1UF,10%,25V	80009	283-5004-00
A7C460	283-5004-00	B010100	B011149	CAP,FXD,CER DI:0.1UF,10%,25V	80009	283-5004-00
A7C462	290-0944-00			CAP,FXD,ELCTLT:220UF,+50-20%,10V	55680	UVX1C221MPA
A7C470	283-5004-00			CAP,FXD,CER DI:0.1UF,10%,25V	80009	283-5004-00
A7C473	283-5004-00			CAP,FXD,CER DI:0.1UF,10%,25V	80009	283-5004-00
A7C480	283-5004-00			CAP,FXD,CER DI:0.1UF,10%,25V	80009	283-5004-00
A7C481	283-5004-00			CAP,FXD,CER DI:0.1UF,10%,25V	80009	283-5004-00
A7C490	283-5004-00			CAP,FXD,CER DI:0.1UF,10%,25V	80009	283-5004-00
A7C491	283-5004-00			CAP,FXD,CER DI:0.1UF,10%,25V	80009	283-5004-00
A7C500	283-5004-00			CAP,FXD,CER DI:0.1UF,10%,25V	80009	283-5004-00
A7C501	283-5004-00			CAP,FXD,CER DI:0.1UF,10%,25V	80009	283-5004-00
A7C502	283-5004-00			CAP,FXD,CER DI:0.1UF,10%,25V	80009	283-5004-00
A7C510	283-5016-00			CAP,FXD,CER DI:1UF,10%,50V	80009	283-5016-00
A7C511	283-5002-00			CAP,FXD,CER DI:1000PF,10%,50V	80009	283-5002-00
A7C512	283-5022-00			CAP,FXD,CER DI:47PF,5%,50V	54583	
A7C513	283-5003-00			CAP,FXD,CER DI:0.01UF,10%,50V	80009	283-5003-00
A7C520	283-5004-00			CAP,FXD,CER DI:0.1UF,10%,25V	80009	283-5004-00
A7C521	283-5004-00			CAP,FXD,CER DI:0.1UF,10%,25V	80009	283-5004-00

Component No.	Tektronix Part No.	Serial/Assembly No. Effective	Dscont	Name & Description	Mfr. Code	Mfr. Part No.
A7C530	283-5004-00			CAP,FXD,CER DI:0.1UF,10%,25V	80009	283-5004-00
A7C531	283-5004-00			CAP,FXD,CER DI:0.1UF,10%,25V	80009	283-5004-00
A7C540	283-5004-00			CAP,FXD,CER DI:0.1UF,10%,25V	80009	283-5004-00
A7C550	283-5004-00	B010100	B011149	CAP,FXD,CER DI:0.1UF,10%,25V	80009	283-5004-00
A7C551	283-5004-00	B010100	B011149	CAP,FXD,CER DI:0.1UF,10%,25V	80009	283-5004-00
A7C560	290-0804-00			CAP,FXD,ELCTLT:10UF,+50-20%,25V	80009	290-0804-00
A7C570	290-0804-00			CAP,FXD,ELCTLT:10UF,+50-20%,25V	80009	290-0804-00
A7C572	283-5003-00			CAP,FXD,CER DI:0.01UF,10%,50V	80009	283-5003-00
A7C573	283-5004-00			CAP,FXD,CER DI:0.1UF,10%,25V	80009	283-5004-00
A7C580	283-5004-00			CAP,FXD,CER DI:0.1UF,10%,25V	80009	283-5004-00
A7C581	283-5004-00			CAP,FXD,CER DI:0.1UF,10%,25V	80009	283-5004-00
A7C582	283-5004-00			CAP,FXD,CER DI:0.1UF,10%,25V	80009	283-5004-00
A7C590	283-5004-00			CAP,FXD,CER DI:0.1UF,10%,25V	80009	283-5004-00
A7C591	283-5004-00			CAP,FXD,CER DI:0.1UF,10%,25V	80009	283-5004-00
A7C600	283-5004-00			CAP,FXD,CER DI:0.1UF,10%,25V	80009	283-5004-00
A7C610	283-5001-00			CAP,FXD,CER DI:100PF,5%,50V	80009	283-5001-00
A7C611	283-5001-00			CAP,FXD,CER DI:100PF,5%,50V	80009	283-5001-00
A7C612	283-5014-00			CAP,FXD,CER DI:330PF,5%,50V	80009	283-5014-00
A7C613	283-5009-00			CAP,FXD,CER DI:15PF,5%,50V	54583	C3216C0G1H150J
A7C614	283-5025-00			CAP,FXD,CER DI:220PF,5%,50V	80009	283-5025-00
A7C615	283-5011-00			CAP,FXD,CER DI:33PF,5%,50V	95275	VJ1206A330JXA
A7C640	283-5004-00			CAP,FXD,CER DI:0.1UF,10%,25V	80009	283-5004-00
A7C641	283-5004-00			CAP,FXD,CER DI:0.1UF,10%,25V	80009	283-5004-00
A7C642	283-5004-00			CAP,FXD,CER DI:0.1UF,10%,25V	80009	283-5004-00
A7C650	283-5004-00			CAP,FXD,CER DI:0.1UF,10%,25V	80009	283-5004-00
A7C660	283-5002-00			CAP,FXD,CER DI:1000PF,10%,50V	80009	283-5002-00
A7C661	283-5002-00			CAP,FXD,CER DI:1000PF,10%,50V	80009	283-5002-00
A7C662	283-5004-00			CAP,FXD,CER DI:0.1UF,10%,25V	80009	283-5004-00
A7C665	283-5004-00			CAP,FXD,CER DI:0.1UF,10%,25V	80009	283-5004-00
A7C666	283-5004-00			CAP,FXD,CER DI:0.1UF,10%,25V	80009	283-5004-00
A7C670	283-5004-00			CAP,FXD,CER DI:0.1UF,10%,25V	80009	283-5004-00
A7C671	283-5004-00			CAP,FXD,CER DI:0.1UF,10%,25V	80009	283-5004-00
A7C680	283-5004-00			CAP,FXD,CER DI:0.1UF,10%,25V	80009	283-5004-00
A7C681	290-0944-00			CAP,FXD,ELCTLT:220UF,+50-20%,10V	55680	UVX1C221MPA
A7C690	290-0944-00			CAP,FXD,ELCTLT:220UF,+50-20%,10V	55680	UVX1C221MPA
A7C691	283-5004-00			CAP,FXD,CER DI:0.1UF,10%,25V	80009	283-5004-00
A7C692	283-5004-00			CAP,FXD,CER DI:0.1UF,10%,25V	80009	283-5004-00
A7C710	283-5004-00			CAP,FXD,CER DI:0.1UF,10%,25V	80009	283-5004-00
A7C720	283-5004-00			CAP,FXD,CER DI:0.1UF,10%,25V	80009	283-5004-00
A7C730	283-5004-00			CAP,FXD,CER DI:0.1UF,10%,25V	80009	283-5004-00
A7C740	283-5004-00			CAP,FXD,CER DI:0.1UF,10%,25V	80009	283-5004-00
A7C741	283-5004-00			CAP,FXD,CER DI:0.1UF,10%,25V	80009	283-5004-00
A7C742	283-5004-00			CAP,FXD,CER DI:0.1UF,10%,25V	80009	283-5004-00
A7C750	283-5027-00			CAP,FXD,CER DI:470PF,5%,50V	54583	
A7C751	283-5004-00			CAP,FXD,CER DI:0.1UF,10%,25V	80009	283-5004-00
A7C752	283-5004-00			CAP,FXD,CER DI:0.1UF,10%,25V	80009	283-5004-00
A7C760	283-5002-00			CAP,FXD,CER DI:1000PF,10%,50V	80009	283-5002-00
A7C761	283-5004-00			CAP,FXD,CER DI:0.1UF,10%,25V	80009	283-5004-00
A7C762	283-5001-00			CAP,FXD,CER DI:100PF,5%,50V	80009	283-5001-00
A7C800	283-5004-00			CAP,FXD,CER DI:0.1UF,10%,25V	80009	283-5004-00
A7C801	283-5004-00			CAP,FXD,CER DI:0.1UF,10%,25V	80009	283-5004-00
A7C802	283-5004-00			CAP,FXD,CER DI:0.1UF,10%,25V	80009	283-5004-00
A7C803	283-5001-00			CAP,FXD,CER DI:100PF,5%,50V	80009	283-5001-00
A7C804	283-5025-00			CAP,FXD,CER DI:220PF,5%,50V	80009	283-5025-00
A7C805	283-5001-00			CAP,FXD,CER DI:100PF,5%,50V	80009	283-5001-00
A7C806	283-5011-00			CAP,FXD,CER DI:33PF,5%,50V	95275	VJ1206A330JXA
A7C807	283-5009-00			CAP,FXD,CER DI:15PF,5%,50V	54583	C3216C0G1H150J
A7C900	283-5014-00			CAP,FXD,CER DI:330PF,5%,50V	80009	283-5014-00
A7C950	283-5004-00			CAP,FXD,CER DI:0.1UF,10%,25V	80009	283-5004-00

Component No.	Tektronix Part No.	Serial/Assembly No. Effective	Dscont	Name & Description	Mfr. Code	Mfr. Part No.
A7C951	283-5004-00			CAP,FXD,CER DI:0.1UF,10%,25V	80009	283-5004-00
A7C952	283-5004-00			CAP,FXD,CER DI:0.1UF,10%,25V	80009	283-5004-00
A7C960	283-5004-00			CAP,FXD,CER DI:0.1UF,10%,25V	80009	283-5004-00
A7C961	283-5004-00			CAP,FXD,CER DI:0.1UF,10%,25V	80009	283-5004-00
A7C962	283-5003-00			CAP,FXD,CER DI:0.01UF,10%,50V	80009	283-5003-00
A7C970	283-5003-00			CAP,FXD,CER DI:0.01UF,10%,50V	80009	283-5003-00
A7CR291	152-5043-00			SEMICOND DVC,DI:PIN,SI,100V,2.5 OHM,0.35PF, 0.35PF,SOT-23,HSMP-3802	80009	152-5043-00
A7CR300	152-5005-00			DIODE,SIG:,ULTRA FAST;70V,0.15A,6NS,COM-ANO DE;BAW56,SOT-23,8MM TR	80009	152-5005-00
A7CR420	152-5004-00			DIODE,SIG:,ULTRA FAST;70V,0.15A,6NS,SER-PAI R;BAV99,SOT-23,8MM TR	25088	BAV99T
A7CR520	152-5004-00			DIODE,SIG:,ULTRA FAST;70V,0.15A,6NS,SER-PAI R;BAV99,SOT-23,8MM TR	25088	BAV99T
A7CR580	152-5004-00			DIODE,SIG:,ULTRA FAST;70V,0.15A,6NS,SER-PAI R;BAV99,SOT-23,8MM TR	25088	BAV99T
A7CR620	152-5004-00			DIODE,SIG:,ULTRA FAST;70V,0.15A,6NS,SER-PAI R;BAV99,SOT-23,8MM TR	25088	BAV99T
A7CR720	152-5004-00			DIODE,SIG:,ULTRA FAST;70V,0.15A,6NS,SER-PAI R;BAV99,SOT-23,8MM TR	25088	BAV99T
A7J110	131-1857-00			CONN,HDR:PCB,;MALE,STR,1 X 36,0.1 CTR,0.230 MLG X 0.100 TAIL,GOLD;,,	58050	082-3644-SS10
A7J111	131-1857-00			CONN,HDR:PCB,;MALE,STR,1 X 36,0.1 CTR,0.230 MLG X 0.100 TAIL,GOLD;,,	58050	082-3644-SS10
A7J160	131-0391-01			CONN,RF JACK:	80009	131-0391-01
A7J190	131-0391-01			CONN,RF JACK:	80009	131-0391-01
A7J260	131-0391-01			CONN,RF JACK:	80009	131-0391-01
A7J360	131-1425-00			CONN,HDR:PCB,;MALE,RTANG,1 X 36,0.1 CTR,0.2 30 MLG X 0.090 TAIL,30 GOLD,STACKABLE;,,	22526	65521-136
A7J570	131-1857-00			CONN,HDR:PCB,;MALE,STR,1 X 36,0.1 CTR,0.230 MLG X 0.100 TAIL,GOLD;,,	58050	082-3644-SS10
A7L140	108-5069-00			COIL,RF:FXD,120UH,5%	80009	108-5069-00
A7L350	108-5037-00			COIL,RF:INDUCTOR,;22UH,10%,50 @ 2.52MHZ,SRF =20MHZ,DCR=3.2 OHMS,1DC=180;SMD, 12MM T&R	54583	NL453232T-220K
A7L351	108-5093-00			COIL,RF:	02113	1812LS-222 XKBA
A7L380	108-5046-00			COIL,RF:	80009	108-5046-00
A7L381	108-5046-00			COIL,RF:	80009	108-5046-00
A7L440	108-5037-00			COIL,RF:INDUCTOR,;22UH,10%,50 @ 2.52MHZ,SRF =20MHZ,DCR=3.2 OHMS,1DC=180;SMD, 12MM T&R	54583	NL453232T-220K
A7L441	108-5037-00			COIL,RF:INDUCTOR,;22UH,10%,50 @ 2.52MHZ,SRF =20MHZ,DCR=3.2 OHMS,1DC=180;SMD, 12MM T&R	54583	NL453232T-220K
A7L610	108-5018-00			COIL,RF:FXD,4.7UH,20%, Q=50, SRF 45 MHZ, DC R 1.0 OHM, I MAX	80009	108-5018-00
A7L611	108-5051-00			COIL,RF:FXD,10UH,10%, Q=50,SRF 20 MHZ, DCR 1.6 OHM,I MAX 250MASMD, 12 MM TAPED & REELE D	54583	NL453232-100K
A7L612	108-5010-00			COIL,RF:	80009	108-5010-00
A7L680	108-1262-00			COIL,RF:FXD,100UH,10%,Q=30,SRF 8.2MHZ,DCR 0 .23 OHM,I MAX 0.75ARADIAL LEAD	80009	108-1262-00
A7L690	108-1262-00			COIL,RF:FXD,100UH,10%,Q=30,SRF 8.2MHZ,DCR 0 .23 OHM,I MAX 0.75ARADIAL LEAD	80009	108-1262-00
A7L760	108-5049-00			COIL,RF:	02113	1008CS-821-05
A7L800	108-5018-00			COIL,RF:FXD,4.7UH,20%, Q=50, SRF 45 MHZ, DC R 1.0 OHM, I MAX	80009	108-5018-00
A7L801	108-5010-00			COIL,RF:	80009	108-5010-00
A7L802	108-5051-00			COIL,RF:FXD,10UH,10%, Q=50,SRF 20 MHZ, DCR 1.6 OHM,I MAX 250MASMD, 12 MM TAPED & REELE D	54583	NL453232-100K
A7P7	131-3556-00			CONN,RCPT,ELEC:CARD CONN,2 X 12,HORIZ	22526	66527-012

Component No.	Tektronix Part No.	Serial/Assembly No. Effective	Dscont	Name & Description	Mfr. Code	Mfr. Part No.
A7P110	131-3199-00			BUS,CONDUCTOR:SHUNT,;FEMALE,1 X 2,0.1 CTR,0 .200 H,LOW PROFILE,JUMPER;,,	22526	76264-101
A7P570	131-3199-00			BUS,CONDUCTOR:SHUNT,;FEMALE,1 X 2,0.1 CTR,0 .200 H,LOW PROFILE,JUMPER;,,	22526	76264-101
A7Q170	151-5001-00			TRANSISTOR,SIG:BIPOLAR,NPN;40V,200MA,300MHZ ,AMPLIFIER;MMBT3904L,TO-236/SOT-23,8MM T&R	80009	151-5001-00
A7Q220	156-6140-00			IC,LINEAR:BIPOLAR,TRANSISTOR ARRAY;QUAD,NPN ,INDEPENDENT,MATCHED;MAT04FS,SO14.150,TUBE	80009	156-6140-00
A7Q310	151-5000-00			TRANSISTOR,SIG:BIPOLAR,PNP;40V,200MA,250MHZ ,AMPLIFIER;MMBT3906L,TO-236/SOT-23,8MM T&R	04713	MMBT3906LT1
A7Q311	151-5000-00			TRANSISTOR,SIG:BIPOLAR,PNP;40V,200MA,250MHZ ,AMPLIFIER;MMBT3906L,TO-236/SOT-23,8MM T&R	04713	MMBT3906LT1
A7Q312	151-5000-00			TRANSISTOR,SIG:BIPOLAR,PNP;40V,200MA,250MHZ ,AMPLIFIER;MMBT3906L,TO-236/SOT-23,8MM T&R	04713	MMBT3906LT1
A7Q313	151-5000-00			TRANSISTOR,SIG:BIPOLAR,PNP;40V,200MA,250MHZ ,AMPLIFIER;MMBT3906L,TO-236/SOT-23,8MM T&R	04713	MMBT3906LT1
A7Q330	151-5000-00			TRANSISTOR,SIG:BIPOLAR,PNP;40V,200MA,250MHZ ,AMPLIFIER;MMBT3906L,TO-236/SOT-23,8MM T&R	04713	MMBT3906LT1
A7Q340	151-5001-00			TRANSISTOR,SIG:BIPOLAR,NPN;40V,200MA,300MHZ ,AMPLIFIER;MMBT3904L,TO-236/SOT-23,8MM T&R	80009	151-5001-00
A7Q420	151-5001-00			TRANSISTOR,SIG:BIPOLAR,NPN;40V,200MA,300MHZ ,AMPLIFIER;MMBT3904L,TO-236/SOT-23,8MM T&R	80009	151-5001-00
A7Q421	151-5000-00			TRANSISTOR,SIG:BIPOLAR,PNP;40V,200MA,250MHZ ,AMPLIFIER;MMBT3906L,TO-236/SOT-23,8MM T&R	04713	MMBT3906LT1
A7Q460	151-5001-00			TRANSISTOR,SIG:BIPOLAR,NPN;40V,200MA,300MHZ ,AMPLIFIER;MMBT3904L,TO-236/SOT-23,8MM T&R	80009	151-5001-00
A7Q600	151-5000-00			TRANSISTOR,SIG:BIPOLAR,PNP;40V,200MA,250MHZ ,AMPLIFIER;MMBT3906L,TO-236/SOT-23,8MM T&R	04713	MMBT3906LT1
A7Q601	151-5001-00			TRANSISTOR,SIG:BIPOLAR,NPN;40V,200MA,300MHZ ,AMPLIFIER;MMBT3904L,TO-236/SOT-23,8MM T&R	80009	151-5001-00
A7Q680	151-5001-00			TRANSISTOR,SIG:BIPOLAR,NPN;40V,200MA,300MHZ ,AMPLIFIER;MMBT3904L,TO-236/SOT-23,8MM T&R	80009	151-5001-00
A7Q960	151-5000-00			TRANSISTOR,SIG:BIPOLAR,PNP;40V,200MA,250MHZ ,AMPLIFIER;MMBT3906L,TO-236/SOT-23,8MM T&R	04713	MMBT3906LT1
A7Q970	151-5000-00			TRANSISTOR,SIG:BIPOLAR,PNP;40V,200MA,250MHZ ,AMPLIFIER;MMBT3906L,TO-236/SOT-23,8MM T&R	04713	MMBT3906LT1
A7R100	321-5027-00			RES,FXD:METAL FILM;5.62K OHM,1%,0.125W,TC=1 00 PPM;1206,T&R	80009	321-5027-00
A7R101	321-5020-00			RES,FXD:METAL FILM;1.5K OHM,1%,0.125W,TC=10 0 PPM;1206,T&R	80009	321-5020-00
A7R102	321-5039-00			RES,FXD:METAL FILM;56.2K OHM,1%,0.125W,TC=1 00 PPM;1206,T&R	80009	321-5039-00
A7R103	321-5039-00			RES,FXD:METAL FILM;56.2K OHM,1%,0.125W,TC=1 00 PPM;1206,T&R	80009	321-5039-00
A7R110	321-5041-00			RES,FXD:METAL FILM;82.5K OHM,1%,0.125W,TC=1 00 PPM;1206,T&R	80009	321-5041-00
A7R111	321-5018-00			RES,FXD:METAL FILM;1.0K OHM,1%,0.125W,TC=10 0 PPM;1206,T&R	80009	321-5018-00
A7R112	321-5018-00			RES,FXD:METAL FILM;1.0K OHM,1%,0.125W,TC=10 0 PPM;1206,T&R	80009	321-5018-00
A7R113	321-5030-00			RES,FXD:METAL FILM;10.0K OHM,1%,0.125W,TC=1 00 PPM;1206,T&R	80009	321-5030-00
A7R114	311-1239-00			RES,VAR,TRMR:CERMET;2.5K OHM,10%,0.5W,0.375 SQ,SIDE ADJUST	80009	311-1239-00
A7R115	321-5030-00			RES,FXD:METAL FILM;10.0K OHM,1%,0.125W,TC=1 00 PPM;1206,T&R	80009	321-5030-00
A7R116	321-5019-00			RES,FXD:METAL FILM;1.21K OHM,1%,0.125W,TC=1 00 PPM;1206,T&R	80009	321-5019-00

Component No.	Tektronix Part No.	Serial/Assembly No. Effective	Dscont	Name & Description	Mfr. Code	Mfr. Part No.
A7R117	321-5041-00			RES,FXD:METAL FILM;82.5K OHM,1%,0.125W,TC=100 PPM;1206,T&R	80009	321-5041-00
A7R118	311-1245-00			RES,VAR,NONWW:TRMR,10K OHM,0.5W	80009	311-1245-00
A7R120	321-5034-00			RES,FXD:METAL FILM;22.1K OHM,1%,0.125W,TC=100 PPM;1206,T&R	80009	321-5034-00
A7R121	321-5035-00			RES,FXD:METAL FILM;27.4K OHM,1%,0.125W,TC=100 PPM;1206,T&R	80009	321-5035-00
A7R122	321-5049-00			RES,FXD:METAL FILM;1M OHM,1%,0.125W,TC=100 PPM;1206,T&R	80009	321-5049-00
A7R123	321-5014-00			RES,FXD:METAL FILM;475 OHM,1%,0.125W,TC=100 PPM;1206,T&R	80009	321-5014-00
A7R124	321-5019-00			RES,FXD:METAL FILM;1.21K OHM,1%,0.125W,TC=100 PPM;1206,T&R	80009	321-5019-00
A7R125	321-5025-00			RES,FXD:METAL FILM;3.92K OHM,1%,0.125W,TC=100 PPM;1206,T&R	80009	321-5025-00
A7R126	321-5018-00			RES,FXD:METAL FILM;1.0K OHM,1%,0.125W,TC=100 PPM;1206,T&R	80009	321-5018-00
A7R127	321-5022-00			RES,FXD:METAL FILM;2.21K OHM,1%,0.125W,TC=100 PPM;1206,T&R	80009	321-5022-00
A7R128	321-5022-00			RES,FXD:METAL FILM;2.21K OHM,1%,0.125W,TC=100 PPM;1206,T&R	80009	321-5022-00
A7R129	321-5014-00			RES,FXD:METAL FILM;475 OHM,1%,0.125W,TC=100 PPM;1206,T&R	80009	321-5014-00
A7R130	321-5014-00			RES,FXD:METAL FILM;475 OHM,1%,0.125W,TC=100 PPM;1206,T&R	80009	321-5014-00
A7R131	321-5014-00			RES,FXD:METAL FILM;475 OHM,1%,0.125W,TC=100 PPM;1206,T&R	80009	321-5014-00
A7R132	321-5006-00			RES,FXD:METAL FILM;100 OHM,1%,0.125W,TC=100 PPM;1206,T&R	80009	321-5006-00
A7R133	321-5023-00			RES,FXD:METAL FILM;2.74K OHM,1%,0.125W,TC=100 PPM;1206,T&R	80009	321-5023-00
A7R134	311-1237-00			RES,VAR,NONWW:1K OHM,10%,0.50W	80009	311-1237-00
A7R141	311-1245-00			RES,VAR,NONWW:TRMR,10K OHM,0.5W	80009	311-1245-00
A7R142	311-1245-00			RES,VAR,NONWW:TRMR,10K OHM,0.5W	80009	311-1245-00
A7R150	321-5015-00			RES,FXD:METAL FILM;562 OHM,1%,0.125W,TC=100 PPM;1206,T&R	80009	321-5015-00
A7R151	321-5030-00			RES,FXD:METAL FILM;10.0K OHM,1%,0.125W,TC=100 PPM;1206,T&R	80009	321-5030-00
A7R153	311-1239-00			RES,VAR,TRMR:CERMET;2.5K OHM,10%,0.5W,0.375 SQ,SIDE ADJUST	80009	311-1239-00
A7R160	311-1245-00			RES,VAR,NONWW:TRMR,10K OHM,0.5W	80009	311-1245-00
A7R170	321-5006-00			RES,FXD:METAL FILM;100 OHM,1%,0.125W,TC=100 PPM;1206,T&R	80009	321-5006-00
A7R171	321-5018-00			RES,FXD:METAL FILM;1.0K OHM,1%,0.125W,TC=100 PPM;1206,T&R	80009	321-5018-00
A7R172	311-1245-00			RES,VAR,NONWW:TRMR,10K OHM,0.5W	80009	311-1245-00
A7R180	321-5014-00			RES,FXD:METAL FILM;475 OHM,1%,0.125W,TC=100 PPM;1206,T&R	80009	321-5014-00
A7R181	321-5023-00			RES,FXD:METAL FILM;2.74K OHM,1%,0.125W,TC=100 PPM;1206,T&R	80009	321-5023-00
A7R182	321-5023-00			RES,FXD:METAL FILM;2.74K OHM,1%,0.125W,TC=100 PPM;1206,T&R	80009	321-5023-00
A7R183	321-5023-00			RES,FXD:METAL FILM;2.74K OHM,1%,0.125W,TC=100 PPM;1206,T&R	80009	321-5023-00
A7R200	321-5020-00			RES,FXD:METAL FILM;1.5K OHM,1%,0.125W,TC=100 PPM;1206,T&R	80009	321-5020-00
A7R201	321-5041-00			RES,FXD:METAL FILM;82.5K OHM,1%,0.125W,TC=100 PPM;1206,T&R	80009	321-5041-00

Component No.	Tektronix Part No.	Serial/Assembly No. Effective	Dscont	Name & Description	Mfr. Code	Mfr. Part No.
A7R202	321-5027-00			RES,FXD:METAL FILM;5.62K OHM,1%,0.125W,TC=100 PPM;1206,T&R	80009	321-5027-00
A7R203	321-5038-00			RES,FXD:METAL FILM;47.5K OHM,1%,0.125W,TC=100 PPM;1206,T&R	80009	321-5038-00
A7R204	321-5039-00			RES,FXD:METAL FILM;56.2K OHM,1%,0.125W,TC=100 PPM;1206,T&R	80009	321-5039-00
A7R205	321-5047-00			RES,FXD:METAL FILM;100K OHM,1%,0.125W,TC=100 PPM;1206,T&R	80009	321-5047-00
A7R210	321-5014-00			RES,FXD:METAL FILM;475 OHM,1%,0.125W,TC=100 PPM;1206,T&R	80009	321-5014-00
A7R220	321-5049-00			RES,FXD:METAL FILM;1M OHM,1%,0.125W,TC=100 PPM;1206,T&R	80009	321-5049-00
A7R221	321-5020-00			RES,FXD:METAL FILM;1.5K OHM,1%,0.125W,TC=100 PPM;1206,T&R	80009	321-5020-00
A7R222	321-5018-00			RES,FXD:METAL FILM;1.0K OHM,1%,0.125W,TC=100 PPM;1206,T&R	80009	321-5018-00
A7R223	321-5023-00			RES,FXD:METAL FILM;2.74K OHM,1%,0.125W,TC=100 PPM;1206,T&R	80009	321-5023-00
A7R224	321-5022-00			RES,FXD:METAL FILM;2.21K OHM,1%,0.125W,TC=100 PPM;1206,T&R	80009	321-5022-00
A7R225	321-5032-00			RES,FXD:METAL FILM;15.0K OHM,1%,0.125W,TC=100 PPM;1206,T&R	80009	321-5032-00
A7R230	321-5020-00			RES,FXD:METAL FILM;1.5K OHM,1%,0.125W,TC=100 PPM;1206,T&R	80009	321-5020-00
A7R240	321-5018-00			RES,FXD:METAL FILM;1.0K OHM,1%,0.125W,TC=100 PPM;1206,T&R	80009	321-5018-00
A7R241	321-5047-00			RES,FXD:METAL FILM;100K OHM,1%,0.125W,TC=100 PPM;1206,T&R	80009	321-5047-00
A7R243	321-5047-00			RES,FXD:METAL FILM;100K OHM,1%,0.125W,TC=100 PPM;1206,T&R	80009	321-5047-00
A7R250	321-5013-00			RES,FXD:METAL FILM;392 OHM,1%,0.125W,TC=100 PPM;1206,T&R	80009	321-5013-00
A7R251	321-5006-00			RES,FXD:METAL FILM;100 OHM,1%,0.125W,TC=100 PPM;1206,T&R	80009	321-5006-00
A7R252	321-5015-00			RES,FXD:METAL FILM;562 OHM,1%,0.125W,TC=100 PPM;1206,T&R	80009	321-5015-00
A7R253	321-5006-00			RES,FXD:METAL FILM;100 OHM,1%,0.125W,TC=100 PPM;1206,T&R	80009	321-5006-00
A7R254	321-5034-00			RES,FXD:METAL FILM;22.1K OHM,1%,0.125W,TC=100 PPM;1206,T&R	80009	321-5034-00
A7R255	321-5034-00			RES,FXD:METAL FILM;22.1K OHM,1%,0.125W,TC=100 PPM;1206,T&R	80009	321-5034-00
A7R256	321-5018-00			RES,FXD:METAL FILM;1.0K OHM,1%,0.125W,TC=100 PPM;1206,T&R	80009	321-5018-00
A7R260	321-5014-00			RES,FXD:METAL FILM;475 OHM,1%,0.125W,TC=100 PPM;1206,T&R	80009	321-5014-00
A7R270	321-5022-00			RES,FXD:METAL FILM;2.21K OHM,1%,0.125W,TC=100 PPM;1206,T&R	80009	321-5022-00
A7R271	321-5014-00			RES,FXD:METAL FILM;475 OHM,1%,0.125W,TC=100 PPM;1206,T&R	80009	321-5014-00
A7R272	321-5006-00			RES,FXD:METAL FILM;100 OHM,1%,0.125W,TC=100 PPM;1206,T&R	80009	321-5006-00
A7R280	321-5000-00			RES,FXD:METAL FILM;10 OHM,1%,0.125W,TC=100 PPM;1206,T&R	57668	MCR18EZHFW10E
A7R281	321-5006-00			RES,FXD:METAL FILM;100 OHM,1%,0.125W,TC=100 PPM;1206,T&R	80009	321-5006-00
A7R282	321-5020-00			RES,FXD:METAL FILM;1.5K OHM,1%,0.125W,TC=100 PPM;1206,T&R	80009	321-5020-00

Component No.	Tektronix Part No.	Serial/Assembly No. Effective	Dscont	Name & Description	Mfr. Code	Mfr. Part No.
A7R283	321-5004-00			RES,FXD:METAL FILM;22.1 OHM,1%,0.125W,TC=100 PPM;1206,T&R	80009	321-5004-00
A7R284	321-5023-00			RES,FXD:METAL FILM;2.74K OHM,1%,0.125W,TC=100 PPM;1206,T&R	80009	321-5023-00
A7R285	321-5010-00			RES,FXD:METAL FILM;221 OHM,1%,0.125W,TC=100 PPM;1206,T&R	80009	321-5010-00
A7R290	321-5000-00			RES,FXD:METAL FILM;10 OHM,1%,0.125W,TC=100 PPM;1206,T&R	57668	MCR18EZHFW10E
A7R294	321-5018-00			RES,FXD:METAL FILM;1.0K OHM,1%,0.125W,TC=100 PPM;1206,T&R	80009	321-5018-00
A7R300	321-5049-00			RES,FXD:METAL FILM;1M OHM,1%,0.125W,TC=100 PPM;1206,T&R	80009	321-5049-00
A7R301	321-5047-00			RES,FXD:METAL FILM;100K OHM,1%,0.125W,TC=100 PPM;1206,T&R	80009	321-5047-00
A7R302	321-5048-00			RES,FXD:METAL FILM;332K OHM,1%,0.125W,TC=100 PPM;1206,T&R	80009	321-5048-00
A7R303	321-5018-00			RES,FXD:METAL FILM;1.0K OHM,1%,0.125W,TC=100 PPM;1206,T&R	80009	321-5018-00
A7R310	321-5039-00			RES,FXD:METAL FILM;56.2K OHM,1%,0.125W,TC=100 PPM;1206,T&R	80009	321-5039-00
A7R311	321-5030-00			RES,FXD:METAL FILM;10.0K OHM,1%,0.125W,TC=100 PPM;1206,T&R	80009	321-5030-00
A7R312	321-5034-00			RES,FXD:METAL FILM;22.1K OHM,1%,0.125W,TC=100 PPM;1206,T&R	80009	321-5034-00
A7R313	321-5030-00			RES,FXD:METAL FILM;10.0K OHM,1%,0.125W,TC=100 PPM;1206,T&R	80009	321-5030-00
A7R314	321-5033-00			RES,FXD:METAL FILM;18.2K OHM,1%,0.125W,TC=100 PPM;1206,T&R	80009	321-5033-00
A7R315	321-5020-00			RES,FXD:METAL FILM;1.5K OHM,1%,0.125W,TC=100 PPM;1206,T&R	80009	321-5020-00
A7R316	321-5033-00			RES,FXD:METAL FILM;18.2K OHM,1%,0.125W,TC=100 PPM;1206,T&R	80009	321-5033-00
A7R317	321-5022-00			RES,FXD:METAL FILM;2.21K OHM,1%,0.125W,TC=100 PPM;1206,T&R	80009	321-5022-00
A7R318	321-5022-00			RES,FXD:METAL FILM;2.21K OHM,1%,0.125W,TC=100 PPM;1206,T&R	80009	321-5022-00
A7R319	321-5022-00			RES,FXD:METAL FILM;2.21K OHM,1%,0.125W,TC=100 PPM;1206,T&R	80009	321-5022-00
A7R320	321-5023-00			RES,FXD:METAL FILM;2.74K OHM,1%,0.125W,TC=100 PPM;1206,T&R	80009	321-5023-00
A7R321	321-5031-00			RES,FXD:METAL FILM;12.1K OHM,1%,0.125W,TC=100 PPM;1206,T&R	80009	321-5031-00
A7R322	321-5030-00			RES,FXD:METAL FILM;10.0K OHM,1%,0.125W,TC=100 PPM;1206,T&R	80009	321-5030-00
A7R323	321-5030-00			RES,FXD:METAL FILM;10.0K OHM,1%,0.125W,TC=100 PPM;1206,T&R	80009	321-5030-00
A7R324	321-5004-00			RES,FXD:METAL FILM;22.1 OHM,1%,0.125W,TC=100 PPM;1206,T&R	80009	321-5004-00
A7R325	321-5034-00			RES,FXD:METAL FILM;22.1K OHM,1%,0.125W,TC=100 PPM;1206,T&R	80009	321-5034-00
A7R326	321-5030-00			RES,FXD:METAL FILM;10.0K OHM,1%,0.125W,TC=100 PPM;1206,T&R	80009	321-5030-00
A7R327	321-5030-00			RES,FXD:METAL FILM;10.0K OHM,1%,0.125W,TC=100 PPM;1206,T&R	80009	321-5030-00
A7R330	321-5004-00			RES,FXD:METAL FILM;22.1 OHM,1%,0.125W,TC=100 PPM;1206,T&R	80009	321-5004-00
A7R331	321-5047-00			RES,FXD:METAL FILM;100K OHM,1%,0.125W,TC=100 PPM;1206,T&R	80009	321-5047-00

Component No.	Tektronix Part No.	Serial/Assembly No. Effective	Dscont	Name & Description	Mfr. Code	Mfr. Part No.
A7R332	321-5030-00			RES,FXD:METAL FILM;10.0K OHM,1%,0.125W,TC=100 PPM;1206,T&R	80009	321-5030-00
A7R333	321-5018-00			RES,FXD:METAL FILM;1.0K OHM,1%,0.125W,TC=100 PPM;1206,T&R	80009	321-5018-00
A7R334	321-5018-00			RES,FXD:METAL FILM;1.0K OHM,1%,0.125W,TC=100 PPM;1206,T&R	80009	321-5018-00
A7R335	321-5047-00			RES,FXD:METAL FILM;100K OHM,1%,0.125W,TC=100 PPM;1206,T&R	80009	321-5047-00
A7R340	321-5030-00	B010100	B011344	RES,FXD:METAL FILM;10.0K OHM,1%,0.125W,TC=100 PPM;1206,T&R	80009	321-5030-00
A7R340	321-5018-00	B011344		RES,FXD:METAL FILM;1.0K OHM,1%,0.125W,TC=100 PPM;1206,T&R	80009	321-5018-00
A7R341	321-5018-00			RES,FXD:METAL FILM;1.0K OHM,1%,0.125W,TC=100 PPM;1206,T&R	80009	321-5018-00
A7R342	321-5030-00			RES,FXD:METAL FILM;10.0K OHM,1%,0.125W,TC=100 PPM;1206,T&R	80009	321-5030-00
A7R343	321-5004-00			RES,FXD:METAL FILM;22.1 OHM,1%,0.125W,TC=100 PPM;1206,T&R	80009	321-5004-00
A7R351	321-5023-00			RES,FXD:METAL FILM;2.74K OHM,1%,0.125W,TC=100 PPM;1206,T&R	80009	321-5023-00
A7R354	321-5018-00			RES,FXD:METAL FILM;1.0K OHM,1%,0.125W,TC=100 PPM;1206,T&R	80009	321-5018-00
A7R360	321-5043-00			RES,FXD:METAL FILM;47.5 OHM,1%,0.125W,TC=100 PPM;1206,T&R	80009	321-5043-00
A7R361	321-5030-00	B010100	B011344	RES,FXD:METAL FILM;10.0K OHM,1%,0.125W,TC=100 PPM;1206,T&R	80009	321-5030-00
A7R361	321-5018-00	B011345		RES,FXD:METAL FILM;1.0K OHM,1%,0.125W,TC=100 PPM;1206,T&R	80009	321-5018-00
A7R370	321-5047-00			RES,FXD:METAL FILM;100K OHM,1%,0.125W,TC=100 PPM;1206,T&R	80009	321-5047-00
A7R390	321-5023-00			RES,FXD:METAL FILM;2.74K OHM,1%,0.125W,TC=100 PPM;1206,T&R	80009	321-5023-00
A7R391	321-5030-00			RES,FXD:METAL FILM;10.0K OHM,1%,0.125W,TC=100 PPM;1206,T&R	80009	321-5030-00
A7R392	321-5043-00			RES,FXD:METAL FILM;47.5 OHM,1%,0.125W,TC=100 PPM;1206,T&R	80009	321-5043-00
A7R393	321-5030-00			RES,FXD:METAL FILM;10.0K OHM,1%,0.125W,TC=100 PPM;1206,T&R	80009	321-5030-00
A7R394	321-5030-00			RES,FXD:METAL FILM;10.0K OHM,1%,0.125W,TC=100 PPM;1206,T&R	80009	321-5030-00
A7R395	321-5018-00			RES,FXD:METAL FILM;1.0K OHM,1%,0.125W,TC=100 PPM;1206,T&R	80009	321-5018-00
A7R400	321-5013-00			RES,FXD:METAL FILM;392 OHM,1%,0.125W,TC=100 PPM;1206,T&R	80009	321-5013-00
A7R401	321-5013-00			RES,FXD:METAL FILM;392 OHM,1%,0.125W,TC=100 PPM;1206,T&R	80009	321-5013-00
A7R402	321-5014-00			RES,FXD:METAL FILM;475 OHM,1%,0.125W,TC=100 PPM;1206,T&R	80009	321-5014-00
A7R410	321-5020-00			RES,FXD:METAL FILM;1.5K OHM,1%,0.125W,TC=100 PPM;1206,T&R	80009	321-5020-00
A7R411	321-5032-00			RES,FXD:METAL FILM;15.0K OHM,1%,0.125W,TC=100 PPM;1206,T&R	80009	321-5032-00
A7R412	321-5032-00			RES,FXD:METAL FILM;15.0K OHM,1%,0.125W,TC=100 PPM;1206,T&R	80009	321-5032-00
A7R413	321-5023-00			RES,FXD:METAL FILM;2.74K OHM,1%,0.125W,TC=100 PPM;1206,T&R	80009	321-5023-00
A7R414	321-5032-00			RES,FXD:METAL FILM;15.0K OHM,1%,0.125W,TC=100 PPM;1206,T&R	80009	321-5032-00

Component No.	Tektronix Part No.	Serial/Assembly No. Effective	Dscont	Name & Description	Mfr. Code	Mfr. Part No.
A7R415	321-5026-00			RES,FXD:METAL FILM;4.75K OHM,1%,0.125W,TC=100 PPM;1206,T&R	80009	321-5026-00
A7R416	321-5020-00			RES,FXD:METAL FILM;1.5K OHM,1%,0.125W,TC=100 PPM;1206,T&R	80009	321-5020-00
A7R417	321-5038-00			RES,FXD:METAL FILM;47.5K OHM,1%,0.125W,TC=100 PPM;1206,T&R	80009	321-5038-00
A7R420	321-5017-00			RES,FXD:METAL FILM;825 OHM,1%,0.125W,TC=100 PPM;1206,T&R	80009	321-5017-00
A7R421	321-5007-00			RES,FXD:METAL FILM;121 OHM,1%,0.125W,TC=100 PPM;1206,T&R	80009	321-5007-00
A7R422	321-5018-00			RES,FXD:METAL FILM;1.0K OHM,1%,0.125W,TC=100 PPM;1206,T&R	80009	321-5018-00
A7R430	321-5006-00			RES,FXD:METAL FILM;100 OHM,1%,0.125W,TC=100 PPM;1206,T&R	80009	321-5006-00
A7R431	311-1936-00			RES,VAR,NONWW:TRMR,50 OHM,20%,0.5W	32997	3386X-1-500
A7R432	321-5014-00			RES,FXD:METAL FILM;475 OHM,1%,0.125W,TC=100 PPM;1206,T&R	80009	321-5014-00
A7R433	321-5014-00			RES,FXD:METAL FILM;475 OHM,1%,0.125W,TC=100 PPM;1206,T&R	80009	321-5014-00
A7R434	321-5013-00			RES,FXD:METAL FILM;392 OHM,1%,0.125W,TC=100 PPM;1206,T&R	80009	321-5013-00
A7R435	321-5014-00			RES,FXD:METAL FILM;475 OHM,1%,0.125W,TC=100 PPM;1206,T&R	80009	321-5014-00
A7R436	321-5026-00			RES,FXD:METAL FILM;4.75K OHM,1%,0.125W,TC=100 PPM;1206,T&R	80009	321-5026-00
A7R437	321-5006-00			RES,FXD:METAL FILM;100 OHM,1%,0.125W,TC=100 PPM;1206,T&R	80009	321-5006-00
A7R438	321-5015-00			RES,FXD:METAL FILM;562 OHM,1%,0.125W,TC=100 PPM;1206,T&R	80009	321-5015-00
A7R439	321-5015-00			RES,FXD:METAL FILM;562 OHM,1%,0.125W,TC=100 PPM;1206,T&R	80009	321-5015-00
A7R440	321-5018-00			RES,FXD:METAL FILM;1.0K OHM,1%,0.125W,TC=100 PPM;1206,T&R	80009	321-5018-00
A7R441	321-5030-00	B010100	B011344	RES,FXD:METAL FILM;10.0K OHM,1%,0.125W,TC=100 PPM;1206,T&R	80009	321-5030-00
A7R441	321-5018-00	B011345		RES,FXD:METAL FILM;1.0K OHM,1%,0.125W,TC=100 PPM;1206,T&R	80009	321-5018-00
A7R442	321-5006-00			RES,FXD:METAL FILM;100 OHM,1%,0.125W,TC=100 PPM;1206,T&R	80009	321-5006-00
A7R443	321-5030-00			RES,FXD:METAL FILM;10.0K OHM,1%,0.125W,TC=100 PPM;1206,T&R	80009	321-5030-00
A7R450	321-5006-00			RES,FXD:METAL FILM;100 OHM,1%,0.125W,TC=100 PPM;1206,T&R	80009	321-5006-00
A7R451	321-5018-00			RES,FXD:METAL FILM;1.0K OHM,1%,0.125W,TC=100 PPM;1206,T&R	80009	321-5018-00
A7R452	321-5014-00			RES,FXD:METAL FILM;475 OHM,1%,0.125W,TC=100 PPM;1206,T&R	80009	321-5014-00
A7R453	321-5043-00			RES,FXD:METAL FILM;47.5 OHM,1%,0.125W,TC=100 PPM;1206,T&R	80009	321-5043-00
A7R454	321-5024-00	B010100	B011149	RES,FXD:METAL FILM;3.32K OHM,1%,0.125W,TC=100 PPM;1206,T&R	80009	321-5024-00
A7R455	321-5000-00	B010100	B011149	RES,FXD:METAL FILM;10 OHM,1%,0.125W,TC=100 PPM;1206,T&R	57668	MCR18EZHFW10E
A7R460	321-5000-00			RES,FXD:METAL FILM;10 OHM,1%,0.125W,TC=100 PPM;1206,T&R	57668	MCR18EZHFW10E
A7R461	321-5000-00			RES,FXD:METAL FILM;10 OHM,1%,0.125W,TC=100 PPM;1206,T&R	57668	MCR18EZHFW10E
A7R462	321-5030-00			RES,FXD:METAL FILM;10.0K OHM,1%,0.125W,TC=100 PPM;1206,T&R	80009	321-5030-00

Component No.	Tektronix Part No.	Serial/Assembly No. Effective	Dscont	Name & Description	Mfr. Code	Mfr. Part No.
A7R463	321-5030-00			RES,FXD:METAL FILM;10.0K OHM,1%,0.125W,TC=100 PPM;1206,T&R	80009	321-5030-00
A7R464	311-1237-00	B010100	B011149	RES,VAR,NONWW:1K OHM,10%,0.50W	80009	311-1237-00
A7R465	321-5023-00	B010100	B011149	RES,FXD:METAL FILM;2.74K OHM,1%,0.125W,TC=100 PPM;1206,T&R	80009	321-5023-00
A7R466	311-1245-00			RES,VAR,NONWW:TRMR,10K OHM,0.5W	80009	311-1245-00
A7R470	321-5000-00			RES,FXD:METAL FILM;10 OHM,1%,0.125W,TC=100 PPM;1206,T&R	57668	MCR18EZHFW10E
A7R471	321-5000-00			RES,FXD:METAL FILM;10 OHM,1%,0.125W,TC=100 PPM;1206,T&R	57668	MCR18EZHFW10E
A7R472	321-5030-00			RES,FXD:METAL FILM;10.0K OHM,1%,0.125W,TC=100 PPM;1206,T&R	80009	321-5030-00
A7R473	321-5030-00			RES,FXD:METAL FILM;10.0K OHM,1%,0.125W,TC=100 PPM;1206,T&R	80009	321-5030-00
A7R480	321-5032-00			RES,FXD:METAL FILM;15.0K OHM,1%,0.125W,TC=100 PPM;1206,T&R	80009	321-5032-00
A7R481	321-5040-00			RES,FXD:METAL FILM;68.1K OHM,1%,0.125W,TC=100 PPM;1206,T&R	80009	321-5040-00
A7R482	321-5030-00			RES,FXD:METAL FILM;10.0K OHM,1%,0.125W,TC=100 PPM;1206,T&R	80009	321-5030-00
A7R483	321-5030-00			RES,FXD:METAL FILM;10.0K OHM,1%,0.125W,TC=100 PPM;1206,T&R	80009	321-5030-00
A7R490	321-5010-00			RES,FXD:METAL FILM;221 OHM,1%,0.125W,TC=100 PPM;1206,T&R	80009	321-5010-00
A7R500	311-1237-00			RES,VAR,NONWW:1K OHM,10%,0.50W	80009	311-1237-00
A7R501	311-1236-00			RES,VAR,NONWW:TRMR,250 OHM,0.5W	80009	311-1236-00
A7R503	321-5018-00			RES,FXD:METAL FILM;1.0K OHM,1%,0.125W,TC=100 PPM;1206,T&R	80009	321-5018-00
A7R504	321-5004-00			RES,FXD:METAL FILM;22.1 OHM,1%,0.125W,TC=100 PPM;1206,T&R	80009	321-5004-00
A7R510	321-5030-00			RES,FXD:METAL FILM;10.0K OHM,1%,0.125W,TC=100 PPM;1206,T&R	80009	321-5030-00
A7R520	321-5030-00			RES,FXD:METAL FILM;10.0K OHM,1%,0.125W,TC=100 PPM;1206,T&R	80009	321-5030-00
A7R521	321-5030-00			RES,FXD:METAL FILM;10.0K OHM,1%,0.125W,TC=100 PPM;1206,T&R	80009	321-5030-00
A7R523	321-5004-00			RES,FXD:METAL FILM;22.1 OHM,1%,0.125W,TC=100 PPM;1206,T&R	80009	321-5004-00
A7R525	321-5004-00			RES,FXD:METAL FILM;22.1 OHM,1%,0.125W,TC=100 PPM;1206,T&R	80009	321-5004-00
A7R526	311-1244-00			RES,VAR,NONWW:TRMR,100 OHM,0.5W	80009	311-1244-00
A7R527	321-5016-00			RES,FXD:METAL FILM;681 OHM,1%,0.125W,TC=100 PPM;1206,T&R	01121	BCK6810FT
A7R530	321-5043-00			RES,FXD:METAL FILM;47.5 OHM,1%,0.125W,TC=100 PPM;1206,T&R	80009	321-5043-00
A7R531	321-5000-00			RES,FXD:METAL FILM;10 OHM,1%,0.125W,TC=100 PPM;1206,T&R	57668	MCR18EZHFW10E
A7R532	321-5020-00			RES,FXD:METAL FILM;1.5K OHM,1%,0.125W,TC=100 PPM;1206,T&R	80009	321-5020-00
A7R533	321-5014-00			RES,FXD:METAL FILM;475 OHM,1%,0.125W,TC=100 PPM;1206,T&R	80009	321-5014-00
A7R540	321-5000-00			RES,FXD:METAL FILM;10 OHM,1%,0.125W,TC=100 PPM;1206,T&R	57668	MCR18EZHFW10E
A7R541	321-5004-00			RES,FXD:METAL FILM;22.1 OHM,1%,0.125W,TC=100 PPM;1206,T&R	80009	321-5004-00
A7R542	321-5020-00			RES,FXD:METAL FILM;1.5K OHM,1%,0.125W,TC=100 PPM;1206,T&R	80009	321-5020-00
A7R543	321-5043-00			RES,FXD:METAL FILM;47.5 OHM,1%,0.125W,TC=100 PPM;1206,T&R	80009	321-5043-00

Component No.	Tektronix Part No.	Serial/Assembly No. Effective	Dscont	Name & Description	Mfr. Code	Mfr. Part No.
A7R550	321-5000-00	B010100	B011149	RES,FXD:METAL FILM;10 OHM,1%,0.125W,TC=100 PPM;1206,T&R	57668	MCR18EZHFW10E
A7R570	321-5029-00			RES,FXD:METAL FILM;8.25K OHM,1%,0.125W,TC=1 00 PPM;1206,T&R	80009	321-5029-00
A7R571	321-5047-00			RES,FXD:METAL FILM;100K OHM,1%,0.125W,TC=10 0 PPM;1206,T&R	80009	321-5047-00
A7R572	321-5047-00			RES,FXD:METAL FILM;100K OHM,1%,0.125W,TC=10 0 PPM;1206,T&R	80009	321-5047-00
A7R580	321-5004-00			RES,FXD:METAL FILM;22.1 OHM,1%,0.125W,TC=10 0 PPM;1206,T&R	80009	321-5004-00
A7R581	321-5034-00			RES,FXD:METAL FILM;22.1K OHM,1%,0.125W,TC=1 00 PPM;1206,T&R	80009	321-5034-00
A7R582	321-5030-00			RES,FXD:METAL FILM;10.0K OHM,1%,0.125W,TC=1 00 PPM;1206,T&R	80009	321-5030-00
A7R583	321-5030-00			RES,FXD:METAL FILM;10.0K OHM,1%,0.125W,TC=1 00 PPM;1206,T&R	80009	321-5030-00
A7R584	321-5004-00			RES,FXD:METAL FILM;22.1 OHM,1%,0.125W,TC=10 0 PPM;1206,T&R	80009	321-5004-00
A7R585	321-5030-00			RES,FXD:METAL FILM;10.0K OHM,1%,0.125W,TC=1 00 PPM;1206,T&R	80009	321-5030-00
A7R586	321-5030-00			RES,FXD:METAL FILM;10.0K OHM,1%,0.125W,TC=1 00 PPM;1206,T&R	80009	321-5030-00
A7R590	321-5026-00			RES,FXD:METAL FILM;4.75K OHM,1%,0.125W,TC=1 00 PPM;1206,T&R	80009	321-5026-00
A7R591	321-5018-00			RES,FXD:METAL FILM;1.0K OHM,1%,0.125W,TC=10 0 PPM;1206,T&R	80009	321-5018-00
A7R592	321-5018-00			RES,FXD:METAL FILM;1.0K OHM,1%,0.125W,TC=10 0 PPM;1206,T&R	80009	321-5018-00
A7R593	321-5038-00			RES,FXD:METAL FILM;47.5K OHM,1%,0.125W,TC=1 00 PPM;1206,T&R	80009	321-5038-00
A7R594	321-5010-00			RES,FXD:METAL FILM;221 OHM,1%,0.125W,TC=100 PPM;1206,T&R	80009	321-5010-00
A7R595	321-5030-00			RES,FXD:METAL FILM;10.0K OHM,1%,0.125W,TC=1 00 PPM;1206,T&R	80009	321-5030-00
A7R600	321-5014-00			RES,FXD:METAL FILM;475 OHM,1%,0.125W,TC=100 PPM;1206,T&R	80009	321-5014-00
A7R601	321-5026-00			RES,FXD:METAL FILM;4.75K OHM,1%,0.125W,TC=1 00 PPM;1206,T&R	80009	321-5026-00
A7R602	321-5011-00			RES,FXD:METAL FILM;274 OHM,1%,0.125W,TC=100 PPM;1206,T&R	80009	321-5011-00
A7R603	321-5030-00			RES,FXD:METAL FILM;10.0K OHM,1%,0.125W,TC=1 00 PPM;1206,T&R	80009	321-5030-00
A7R604	321-5030-00			RES,FXD:METAL FILM;10.0K OHM,1%,0.125W,TC=1 00 PPM;1206,T&R	80009	321-5030-00
A7R605	321-5004-00			RES,FXD:METAL FILM;22.1 OHM,1%,0.125W,TC=10 0 PPM;1206,T&R	80009	321-5004-00
A7R606	321-5043-00			RES,FXD:METAL FILM;47.5 OHM,1%,0.125W,TC=10 0 PPM;1206,T&R	80009	321-5043-00
A7R607	321-5026-00			RES,FXD:METAL FILM;4.75K OHM,1%,0.125W,TC=1 00 PPM;1206,T&R	80009	321-5026-00
A7R608	321-5026-00			RES,FXD:METAL FILM;4.75K OHM,1%,0.125W,TC=1 00 PPM;1206,T&R	80009	321-5026-00
A7R610	321-5043-00			RES,FXD:METAL FILM;47.5 OHM,1%,0.125W,TC=10 0 PPM;1206,T&R	80009	321-5043-00
A7R611	321-5011-00			RES,FXD:METAL FILM;274 OHM,1%,0.125W,TC=100 PPM;1206,T&R	80009	321-5011-00
A7R612	321-5017-00			RES,FXD:METAL FILM;825 OHM,1%,0.125W,TC=100 PPM;1206,T&R	80009	321-5017-00

Component No.	Tektronix Part No.	Serial/Assembly No. Effective	Dscont	Name & Description	Mfr. Code	Mfr. Part No.
A7R620	321-5018-00			RES,FXD:METAL FILM;1.0K OHM,1%,0.125W,TC=100 PPM;1206,T&R	80009	321-5018-00
A7R621	321-5009-00			RES,FXD:METAL FILM;182 OHM,1%,0.125W,TC=100 PPM;1206,T&R	80009	321-5009-00
A7R622	311-1244-00			RES,VAR,NONWW:TRMR,100 OHM,0.5W	80009	311-1244-00
A7R630	321-5044-00			RES,FXD:METAL FILM;56.2 OHM,1%,0.125W,TC=100 PPM;1206,T&R	01121	BCD56R2FT
A7R632	321-5018-00			RES,FXD:METAL FILM;1.0K OHM,1%,0.125W,TC=100 PPM;1206,T&R	80009	321-5018-00
A7R640	321-5018-00			RES,FXD:METAL FILM;1.0K OHM,1%,0.125W,TC=100 PPM;1206,T&R	80009	321-5018-00
A7R641	321-5004-00			RES,FXD:METAL FILM;22.1 OHM,1%,0.125W,TC=100 PPM;1206,T&R	80009	321-5004-00
A7R642	321-5014-00			RES,FXD:METAL FILM;475 OHM,1%,0.125W,TC=100 PPM;1206,T&R	80009	321-5014-00
A7R643	321-5014-00			RES,FXD:METAL FILM;475 OHM,1%,0.125W,TC=100 PPM;1206,T&R	80009	321-5014-00
A7R644	321-5045-00			RES,FXD:METAL FILM;68.1 OHM,1%,0.125W,TC=100 PPM;1206,T&R	80009	321-5045-00
A7R645	321-5014-00			RES,FXD:METAL FILM;475 OHM,1%,0.125W,TC=100 PPM;1206,T&R	80009	321-5014-00
A7R646	321-5044-00			RES,FXD:METAL FILM;56.2 OHM,1%,0.125W,TC=100 PPM;1206,T&R	01121	BCD56R2FT
A7R647	321-5009-00			RES,FXD:METAL FILM;182 OHM,1%,0.125W,TC=100 PPM;1206,T&R	80009	321-5009-00
A7R648	321-5043-00			RES,FXD:METAL FILM;47.5 OHM,1%,0.125W,TC=100 PPM;1206,T&R	80009	321-5043-00
A7R652	321-5011-00			RES,FXD:METAL FILM;274 OHM,1%,0.125W,TC=100 PPM;1206,T&R	80009	321-5011-00
A7R653	321-5011-00			RES,FXD:METAL FILM;274 OHM,1%,0.125W,TC=100 PPM;1206,T&R	80009	321-5011-00
A7R654	321-5012-00			RES,FXD:METAL FILM;332 OHM,1%,0.125W,TC=100 PPM;1206,T&R	80009	321-5012-00
A7R655	321-5044-00			RES,FXD:METAL FILM;56.2 OHM,1%,0.125W,TC=100 PPM;1206,T&R	01121	BCD56R2FT
A7R661	321-5000-00			RES,FXD:METAL FILM;10 OHM,1%,0.125W,TC=100 PPM;1206,T&R	57668	MCR18EZHFW10E
A7R662	321-5029-00			RES,FXD:METAL FILM;8.25K OHM,1%,0.125W,TC=100 PPM;1206,T&R	80009	321-5029-00
A7R663	321-5051-00			RES,FXD:METAL FILM;0 OHM,1%,0.125W,TC=100 PPM;1206,T&R	80009	321-5051-00
A7R670	321-5046-00			RES,FXD:METAL FILM;82.5 OHM,1%,0.125W,TC=100 PPM;1206,T&R	80009	321-5046-00
A7R671	321-5018-00			RES,FXD:METAL FILM;1.0K OHM,1%,0.125W,TC=100 PPM;1206,T&R	80009	321-5018-00
A7R672	321-5013-00			RES,FXD:METAL FILM;392 OHM,1%,0.125W,TC=100 PPM;1206,T&R	80009	321-5013-00
A7R673	321-5013-00			RES,FXD:METAL FILM;392 OHM,1%,0.125W,TC=100 PPM;1206,T&R	80009	321-5013-00
A7R690	321-5006-00			RES,FXD:METAL FILM;100 OHM,1%,0.125W,TC=100 PPM;1206,T&R	80009	321-5006-00
A7R710	321-5011-00			RES,FXD:METAL FILM;274 OHM,1%,0.125W,TC=100 PPM;1206,T&R	80009	321-5011-00
A7R720	321-5004-00			RES,FXD:METAL FILM;22.1 OHM,1%,0.125W,TC=100 PPM;1206,T&R	80009	321-5004-00
A7R721	321-5018-00			RES,FXD:METAL FILM;1.0K OHM,1%,0.125W,TC=100 PPM;1206,T&R	80009	321-5018-00
A7R722	321-5004-00			RES,FXD:METAL FILM;22.1 OHM,1%,0.125W,TC=100 PPM;1206,T&R	80009	321-5004-00

Component No.	Tektronix Part No.	Serial/Assembly No. Effective	Dscont	Name & Description	Mfr. Code	Mfr. Part No.
A7R730	321-5018-00			RES,FXD:METAL FILM;1.0K OHM,1%,0.125W,TC=100 PPM;1206,T&R	80009	321-5018-00
A7R740	321-5004-00			RES,FXD:METAL FILM;22.1 OHM,1%,0.125W,TC=100 PPM;1206,T&R	80009	321-5004-00
A7R741	321-5011-00			RES,FXD:METAL FILM;274 OHM,1%,0.125W,TC=100 PPM;1206,T&R	80009	321-5011-00
A7R742	321-5045-00			RES,FXD:METAL FILM;68.1 OHM,1%,0.125W,TC=100 PPM;1206,T&R	80009	321-5045-00
A7R750	321-5045-00			RES,FXD:METAL FILM;68.1 OHM,1%,0.125W,TC=100 PPM;1206,T&R	80009	321-5045-00
A7R751	321-5006-00			RES,FXD:METAL FILM;100 OHM,1%,0.125W,TC=100 PPM;1206,T&R	80009	321-5006-00
A7R752	321-5006-00			RES,FXD:METAL FILM;100 OHM,1%,0.125W,TC=100 PPM;1206,T&R	80009	321-5006-00
A7R753	321-5009-00			RES,FXD:METAL FILM;182 OHM,1%,0.125W,TC=100 PPM;1206,T&R	80009	321-5009-00
A7R754	321-5004-00			RES,FXD:METAL FILM;22.1 OHM,1%,0.125W,TC=100 PPM;1206,T&R	80009	321-5004-00
A7R755	321-5004-00			RES,FXD:METAL FILM;22.1 OHM,1%,0.125W,TC=100 PPM;1206,T&R	80009	321-5004-00
A7R756	321-5006-00	B010100	B011149	RES,FXD:METAL FILM;100 OHM,1%,0.125W,TC=100 PPM;1206,T&R	80009	321-5006-00
A7R760	321-5006-00			RES,FXD:METAL FILM;100 OHM,1%,0.125W,TC=100 PPM;1206,T&R	80009	321-5006-00
A7R761	321-5006-00			RES,FXD:METAL FILM;100 OHM,1%,0.125W,TC=100 PPM;1206,T&R	80009	321-5006-00
A7R762	321-5006-00			RES,FXD:METAL FILM;100 OHM,1%,0.125W,TC=100 PPM;1206,T&R	80009	321-5006-00
A7R763	321-5020-00			RES,FXD:METAL FILM;1.5K OHM,1%,0.125W,TC=100 PPM;1206,T&R	80009	321-5020-00
A7R764	321-5020-00			RES,FXD:METAL FILM;1.5K OHM,1%,0.125W,TC=100 PPM;1206,T&R	80009	321-5020-00
A7R765	321-5000-00			RES,FXD:METAL FILM;10 OHM,1%,0.125W,TC=100 PPM;1206,T&R	57668	MCR18EZHFW10E
A7R770	311-1936-00			RES,VAR,NONWW:TRMR,50 OHM,20%,0.5W	32997	3386X-1-500
A7R771	321-5030-00			RES,FXD:METAL FILM;10.0K OHM,1%,0.125W,TC=100 PPM;1206,T&R	80009	321-5030-00
A7R772	321-5017-00			RES,FXD:METAL FILM;825 OHM,1%,0.125W,TC=100 PPM;1206,T&R	80009	321-5017-00
A7R800	321-5043-00			RES,FXD:METAL FILM;47.5 OHM,1%,0.125W,TC=100 PPM;1206,T&R	80009	321-5043-00
A7R900	321-5043-00			RES,FXD:METAL FILM;47.5 OHM,1%,0.125W,TC=100 PPM;1206,T&R	80009	321-5043-00
A7R940	321-5050-00			RES,FXD:METAL FILM;33.2 OHM,1%,0.125W,TC=100 PPM;1206,T&R	57668	MCR18FWEA33E2
A7R941	321-5014-00			RES,FXD:METAL FILM;475 OHM,1%,0.125W,TC=100 PPM;1206,T&R	80009	321-5014-00
A7R950	321-5004-00			RES,FXD:METAL FILM;22.1 OHM,1%,0.125W,TC=100 PPM;1206,T&R	80009	321-5004-00
A7R951	321-5004-00			RES,FXD:METAL FILM;22.1 OHM,1%,0.125W,TC=100 PPM;1206,T&R	80009	321-5004-00
A7R960	321-5004-00			RES,FXD:METAL FILM;22.1 OHM,1%,0.125W,TC=100 PPM;1206,T&R	80009	321-5004-00
A7R961	321-5004-00			RES,FXD:METAL FILM;22.1 OHM,1%,0.125W,TC=100 PPM;1206,T&R	80009	321-5004-00
A7R962	321-5022-00			RES,FXD:METAL FILM;2.21K OHM,1%,0.125W,TC=100 PPM;1206,T&R	80009	321-5022-00
A7R963	321-5031-00			RES,FXD:METAL FILM;12.1K OHM,1%,0.125W,TC=100 PPM;1206,T&R	80009	321-5031-00

Component No.	Tektronix Part No.	Serial/Assembly No. Effective	Dscont	Name & Description	Mfr. Code	Mfr. Part No.
A7R964	321-5017-00			RES,FXD:METAL FILM;825 OHM,1%,0.125W,TC=100 PPM;1206,T&R	80009	321-5017-00
A7R965	321-5022-00			RES,FXD:METAL FILM;2.21K OHM,1%,0.125W,TC=1 00 PPM;1206,T&R	80009	321-5022-00
A7R970	321-5027-00			RES,FXD:METAL FILM;5.62K OHM,1%,0.125W,TC=1 00 PPM;1206,T&R	80009	321-5027-00
A7T180	120-1721-00			TRANSFORMER,RF:AUTO,6:6:6 RATIO	0JR03	120-1721-00
A7T660	120-1721-00			TRANSFORMER,RF:AUTO,6:6:6 RATIO	0JR03	120-1721-00
A7U100	156-5018-00			IC,LINEAR:BIPOLAR,OP-AMP;DUAL,SINGLE SUPPLY ;LM358D,SO8.150,TUBE	80009	156-5018-00
A7U170	151-5001-00			TRANSISTOR,SIG:BIPOLAR,NPN;40V,200MA,300MHZ ,AMPLIFIER;MMBT3904L,TO-236/SOT-23,8MM T&R	80009	151-5001-00
A7U200	156-5528-00			IC,MISC:HCTCMOS,ANALOG SWITCH;QUAD;74HCT431 6,SO16.150	80009	156-5528-00
A7U201	156-5018-00			IC,LINEAR:BIPOLAR,OP-AMP;DUAL,SINGLE SUPPLY ;LM358D,SO8.150,TUBE	80009	156-5018-00
A7U210	156-5082-01			IC,LINEAR:BIPOLAR,OP-AMP;LOW OFFSET;OP07CD, SO8.150,16MM T&R	80009	156-5082-01
A7U211	156-5018-00			IC,LINEAR:BIPOLAR,OP-AMP;DUAL,SINGLE SUPPLY ;LM358D,SO8.150,TUBE	80009	156-5018-00
A7U231	156-5021-01			IC,DIGITAL:CMOS,REGISTER;8-STAGE SHIFT/STOR AGE, 3-STATE;4094,SO16.150,16MM T&R	80009	156-5021-01
A7U240	156-5021-01			IC,DIGITAL:CMOS,REGISTER;8-STAGE SHIFT/STOR AGE, 3-STATE;4094,SO16.150,16MM T&R	80009	156-5021-01
A7U250	156-5467-00			IC,LINEAR:BIPOLAR,OP-AMP;1.0GHZ GBW;NE5539D ,SO14.150	80009	156-5467-00
A7U280	156-6074-00			IC,LINEAR:	80009	156-6074-00
A7U300	156-5138-00			IC,LINEAR:BIFET,OP-AMP;DUAL;MC34002/TL072,S O8.150,TUBE	80009	156-5138-00
A7U320	156-5138-00			IC,LINEAR:BIFET,OP-AMP;DUAL;MC34002/TL072,S O8.150,TUBE	80009	156-5138-00
A7U321	156-6073-00			IC,LINEAR:BIPOLAR,OP-AMP;CURRENT FEEDBACK,2 00MHZ,1 TO 8 GAIN RANGE;CLC400AJE,SO8.150	80009	156-6073-00
A7U330	156-5021-01			IC,DIGITAL:CMOS,REGISTER;8-STAGE SHIFT/STOR AGE, 3-STATE;4094,SO16.150,16MM T&R	80009	156-5021-01
A7U350	156-6141-00			IC,MISC:BIPOLAR,MULTIPLIER;FOUR QUADRANT,50 0MHZ;AD834JR,SO8.150,TUBE	80009	156-6141-00
A7U370	156-2884-00			IC,LINEAR:BIPOLAR,AMPLIFIER;4.0W AUDIO POWE R AMPLIFIER W/DC VOLUME CONTROL;TDA1013B,SI P09	80009	156-2884-00
A7U390	156-5018-00			IC,LINEAR:BIPOLAR,OP-AMP;DUAL,SINGLE SUPPLY ;LM358D,SO8.150,TUBE	80009	156-5018-00
A7U400	156-5528-00			IC,MISC:HCTCMOS,ANALOG SWITCH;QUAD;74HCT431 6,SO16.150	80009	156-5528-00
A7U410	156-5097-00			IC,MISC:CMOS,ANALOG MUX;8 CHANNEL;CD4051,SO 16.150	80009	156-5097-00
A7U420	156-5073-00			IC,MISC:HCMOS,ANALOG MUX;TRIPLE 2-CHANNEL;7 4HC4053,SO16.150,TUBE	80009	156-5073-00
A7U421	156-5120-00			IC,MISC:CMOS,ANALOG MUX;DUAL 4-CHANNEL;74HC 4052,SO16.150	80009	156-5120-00
A7U440	156-6141-00			IC,MISC:BIPOLAR,MULTIPLIER;FOUR QUADRANT,50 0MHZ;AD834JR,SO8.150,TUBE	80009	156-6141-00
A7U450	156-5098-00	B010100	B011149	IC,DIGITAL:HCTCMOS,GATE;QUAD 2-INPUT NAND;7 4HCT00,SO14.150,TUBE	80009	156-5098-00
A7U460	156-5043-01	B010100	B011149	IC,CONVERTER:BIPOLAR,D/A;8 BIT,CURRENT OUT, MULTIPLYING;DAC08ED,SO16.150,16MM T&R	80009	156-5043-01
A7U480	156-5018-00			IC,LINEAR:BIPOLAR,OP-AMP;DUAL,SINGLE SUPPLY ;LM358D,SO8.150,TUBE	80009	156-5018-00

Component No.	Tektronix Part No.	Serial/Assembly No. Effective	Dscont	Name & Description	Mfr. Code	Mfr. Part No.
A7U490	156-5714-00			IC,LINEAR:BIPOLAR,VOLTAGE REGULATOR;POSITIVE,ADJUSTABLE,100MA,4%;LM317LM,SO8.150,TUBE	27014	LM317LM
A7U510	156-5120-00			IC,MISC:CMOS,ANALOG MUX;DUAL 4-CHANNEL;74HC4052,SO16.150	80009	156-5120-00
A7U520	156-5352-00			IC,LINEAR:BIFET,OP-AMP;LOW OFFSET;LT1056C,SO8.150	80009	156-5352-00
A7U530	156-6073-00			IC,LINEAR:BIPOLAR,OP-AMP;CURRENT FEEDBACK,200MHZ,1 TO 8 GAIN RANGE;CLC400AJE,SO8.150	80009	156-6073-00
A7U550	156-5130-00			IC,DIGITAL:HCTCMOS,GATE;TRIPLE 3-INPUT NAND;74HCT10,SO14.150,TUBE	80009	156-5130-00
A7U560	156-5130-00			IC,DIGITAL:HCTCMOS,GATE;TRIPLE 3-INPUT NAND;74HCT10,SO14.150,TUBE	80009	156-5130-00
A7U580	156-5119-00			IC,LINEAR:BIPOLAR,COMPARATOR;DUAL,OPEN COLLECTOR,80NS;LM319D,SO14.150,TUBE	80009	156-5119-00
A7U590	156-5217-00			IC,LINEAR:BIPOLAR,VOLTAGE REGULATOR;NEGATIVE,ADJUSTABLE,100MA,4%;LM337LM,SO8.150	80009	156-5217-00
A7U600	156-6073-00			IC,LINEAR:BIPOLAR,OP-AMP;CURRENT FEEDBACK,200MHZ,1 TO 8 GAIN RANGE;CLC400AJE,SO8.150	80009	156-6073-00
A7U620	156-5073-00			IC,MISC:HCMOS,ANALOG MUX;TRIPLE 2-CHANNEL;74HC4053,SO16.150,TUBE	80009	156-5073-00
A7U630	156-5269-00			IC,DIGITAL:ECL,RECEIVER;TRIPLE LINE;10H116,PLCC20,TUBE	80009	156-5269-00
A7U650	156-6250-00			IC,MISC:CMOS,ANALOG MUX;8 CHANNEL,RF/VIDEO;MAX310CWN,SO18.300,TUBE	80009	156-6250-00
A7U651	156-6073-00			IC,LINEAR:BIPOLAR,OP-AMP;CURRENT FEEDBACK,200MHZ,1 TO 8 GAIN RANGE;CLC400AJE,SO8.150	80009	156-6073-00
A7U660	156-6090-00			IC,LINEAR:BIPOLAR,AMPLIFIER;LOGARITHMIC,DC COUPLED,350 MHZ;AD640JP,PLCC20,TUBE	80009	156-6090-00
A7U670	156-5119-00			IC,LINEAR:BIPOLAR,COMPARATOR;DUAL,OPEN COLLECTOR,80NS;LM319D,SO14.150,TUBE	80009	156-5119-00
A7U710	156-6073-00			IC,LINEAR:BIPOLAR,OP-AMP;CURRENT FEEDBACK,200MHZ,1 TO 8 GAIN RANGE;CLC400AJE,SO8.150	80009	156-6073-00
A7U740	156-6090-00			IC,LINEAR:BIPOLAR,AMPLIFIER;LOGARITHMIC,DC COUPLED,350 MHZ;AD640JP,PLCC20,TUBE	80009	156-6090-00
A7U750	156-6073-00			IC,LINEAR:BIPOLAR,OP-AMP;CURRENT FEEDBACK,200MHZ,1 TO 8 GAIN RANGE;CLC400AJE,SO8.150	80009	156-6073-00
A7U760	156-6074-00			IC,LINEAR:	80009	156-6074-00
A7U990	156-0277-00			IC,LINEAR:BIPOLAR,VOLTAGE REGULATOR;POSITIVE,5.0V,1.0A,4%;MC7805CT,TO-220	80009	156-0277-00
A7U991	156-0846-00			IC,LINEAR:BIPOLAR,VOLTAGE REGULATOR;NEGATIVE,-5.0V,1.0A,4.0%;MC7905CT,TO-220	01295	UA7905CKC
A9	670-9468-01	B010100	B010930	CIRCUIT BD ASSY:DIGITAL STORAGE	80009	670-9468-01
A9	670-9468-02	B010931	B011077	CIRCUIT BD ASSY:DIGITAL STORAGE	80009	670-9468-02
A9	670-9468-03	B011078		CIRCUIT BD ASSY:DIGITAL STORAGE	80009	670-9468-03
A9BT510	146-0044-00			BATTERY,DRY:3V,0.17AH @ 0.85MA,BUTTON CELL,LITHIUM-MANGANESE DIOXIDE	00681	ORDER BY DESCR
A9C118	290-5000-00	B010100	B010930	CAP,FXD,ELCTLT:1UF,20%,50V	TK0900	S50V1MICROF
A9C118	290-5039-00	B010931		CAP,FXD,ALUM:10UF,20%,50V,6.3MM,SMD,16MM TAPE & REEL.	80009	290-5039-00
A9C170	283-5043-00			CAP,FXD,CER DI:820PF,5%,50V	95275	VJ1206A821J-XAAT
A9C171	283-5004-00			CAP,FXD,CER DI:0.1UF,10%,25V	80009	283-5004-00
A9C172	283-5025-00			CAP,FXD,CER DI:220PF,5%,50V	80009	283-5025-00
A9C173	283-5025-00			CAP,FXD,CER DI:220PF,5%,50V	80009	283-5025-00
A9C174	283-5050-00			CAP,FXD,CER DI:560PF,5%,50V	95275	VJ1206A561JXA
A9C180	283-5026-00			CAP,FXD,CER DI:390PF,5%,50V	54583	
A9C182	283-5026-00			CAP,FXD,CER DI:390PF,5%,50V	54583	
A9C183	283-5001-00			CAP,FXD,CER DI:100PF,5%,50V	80009	283-5001-00
A9C185	283-5001-00			CAP,FXD,CER DI:100PF,5%,50V	80009	283-5001-00
A9C254	290-0944-00			CAP,FXD,ELCTLT:220UF,+50-20%,10V	55680	UVX1C221MPA

Component No.	Tektronix Part No.	Serial/Assembly No. Effective	Dscont	Name & Description	Mfr. Code	Mfr. Part No.
A9C268	283-5004-00			CAP,FXD,CER DI:0.1UF,10%,25V	80009	283-5004-00
A9C272	283-5004-00			CAP,FXD,CER DI:0.1UF,10%,25V	80009	283-5004-00
A9C276	283-5001-00			CAP,FXD,CER DI:100PF,5%,50V	80009	283-5001-00
A9C280	283-5004-00			CAP,FXD,CER DI:0.1UF,10%,25V	80009	283-5004-00
A9C282	283-5004-00			CAP,FXD,CER DI:0.1UF,10%,25V	80009	283-5004-00
A9C284	283-5004-00			CAP,FXD,CER DI:0.1UF,10%,25V	80009	283-5004-00
A9C375	283-5004-00			CAP,FXD,CER DI:0.1UF,10%,25V	80009	283-5004-00
A9C376	283-5001-00			CAP,FXD,CER DI:100PF,5%,50V	80009	283-5001-00
A9C380	283-5001-00			CAP,FXD,CER DI:100PF,5%,50V	80009	283-5001-00
A9C381	283-5002-00			CAP,FXD,CER DI:1000PF,10%,50V	80009	283-5002-00
A9C382	283-5004-00			CAP,FXD,CER DI:0.1UF,10%,25V	80009	283-5004-00
A9C384	283-5004-00			CAP,FXD,CER DI:0.1UF,10%,25V	80009	283-5004-00
A9C386	283-5014-00			CAP,FXD,CER DI:330PF,5%,50V	80009	283-5014-00
A9C390	283-5001-00			CAP,FXD,CER DI:100PF,5%,50V	80009	283-5001-00
A9C395	283-5002-00			CAP,FXD,CER DI:1000PF,10%,50V	80009	283-5002-00
A9C396	283-5001-00			CAP,FXD,CER DI:100PF,5%,50V	80009	283-5001-00
A9C397	283-5004-00			CAP,FXD,CER DI:0.1UF,10%,25V	80009	283-5004-00
A9C398	283-5004-00			CAP,FXD,CER DI:0.1UF,10%,25V	80009	283-5004-00
A9C399	290-5000-00	B010100	B010930	CAP,FXD,ELCTLT:1UF,20%,50V	TK0900	S50V1MICROF
A9C399	290-5039-00	B010931		CAP,FXD,ALUM:10UF,20%,50V,6.3MM,SMD,16MM TA PE & REEL.	80009	290-5039-00
A9C412	290-0944-00			CAP,FXD,ELCTLT:220UF,+50-20%,10V	55680	UVX1C221MPA
A9C414	290-0944-00			CAP,FXD,ELCTLT:220UF,+50-20%,10V	55680	UVX1C221MPA
A9C465	290-5001-00	B010100	B011077	CAP,FXD,ELCTLT:10UF,20%,16V	TK0900	ALCHIP-S16V10UF
A9C465	290-5039-00	B011077		CAP,FXD,ALUM:10UF,20%,50V,6.3MM,SMD,16MM TA PE & REEL.	80009	290-5039-00
A9C470	290-0944-00			CAP,FXD,ELCTLT:220UF,+50-20%,10V	55680	UVX1C221MPA
A9C472	283-5004-00			CAP,FXD,CER DI:0.1UF,10%,25V	80009	283-5004-00
A9C474	283-5004-00			CAP,FXD,CER DI:0.1UF,10%,25V	80009	283-5004-00
A9C476	283-5001-00			CAP,FXD,CER DI:100PF,5%,50V	80009	283-5001-00
A9C480	283-5001-00			CAP,FXD,CER DI:100PF,5%,50V	80009	283-5001-00
A9C481	283-5011-00			CAP,FXD,CER DI:33PF,5%,50V	95275	VJ1206A330JXA
A9C482	283-5002-00			CAP,FXD,CER DI:1000PF,10%,50V	80009	283-5002-00
A9C486	290-5000-00	B010100	B010930	CAP,FXD,ELCTLT:1UF,20%,50V	TK0900	S50V1MICROF
A9C486	290-5039-00	B010931		CAP,FXD,ALUM:10UF,20%,50V,6.3MM,SMD,16MM TA PE & REEL.	80009	290-5039-00
A9C520	283-5004-00			CAP,FXD,CER DI:0.1UF,10%,25V	80009	283-5004-00
A9C571	283-5006-00			CAP,FXD,CER DI:5PF,+/- 0.25PF,50V	54583	C3216C0G1H050C
A9C574	283-5001-00			CAP,FXD,CER DI:100PF,5%,50V	80009	283-5001-00
A9C580	290-0944-00			CAP,FXD,ELCTLT:220UF,+50-20%,10V	55680	UVX1C221MPA
A9C642	283-5004-00			CAP,FXD,CER DI:0.1UF,10%,25V	80009	283-5004-00
A9C658	283-5004-00			CAP,FXD,CER DI:0.1UF,10%,25V	80009	283-5004-00
A9C664	283-5004-00			CAP,FXD,CER DI:0.1UF,10%,25V	80009	283-5004-00
A9C706	283-5004-00			CAP,FXD,CER DI:0.1UF,10%,25V	80009	283-5004-00
A9C722	283-5004-00			CAP,FXD,CER DI:0.1UF,10%,25V	80009	283-5004-00
A9C728	283-5004-00			CAP,FXD,CER DI:0.1UF,10%,25V	80009	283-5004-00
A9C738	283-5004-00			CAP,FXD,CER DI:0.1UF,10%,25V	80009	283-5004-00
A9C756	283-5004-00			CAP,FXD,CER DI:0.1UF,10%,25V	80009	283-5004-00
A9C816	283-5004-00			CAP,FXD,CER DI:0.1UF,10%,25V	80009	283-5004-00
A9C822	283-5004-00			CAP,FXD,CER DI:0.1UF,10%,25V	80009	283-5004-00
A9C858	283-5004-00			CAP,FXD,CER DI:0.1UF,10%,25V	80009	283-5004-00
A9C906	283-5004-00			CAP,FXD,CER DI:0.1UF,10%,25V	80009	283-5004-00
A9C946	283-5004-00			CAP,FXD,CER DI:0.1UF,10%,25V	80009	283-5004-00
A9C956	283-5004-00			CAP,FXD,CER DI:0.1UF,10%,25V	80009	283-5004-00
A9CR280	152-5004-00			DIODE,SIG:,ULTRA FAST;70V,0.15A,6NS,SER-PAI R;BAV99,SOT-23,8MM TR	25088	BAV99T
A9CR282	152-5004-00			DIODE,SIG:,ULTRA FAST;70V,0.15A,6NS,SER-PAI R;BAV99,SOT-23,8MM TR	25088	BAV99T
A9CR410	152-5000-00			SEMICOND DVC,DI:SW,SI,70V,COM CATHODE	80009	152-5000-00

Component No.	Tektronix Part No.	Serial/Assembly No. Effective	Dscont	Name & Description	Mfr. Code	Mfr. Part No.
A9CR438	152-5004-00			DIODE,SIG:,ULTRA FAST;70V,0.15A,6NS,SER-PAIR;BAV99,SOT-23,8MM TR	25088	BAV99T
A9CR536	152-5005-00			DIODE,SIG:,ULTRA FAST;70V,0.15A,6NS,COM-ANODE;BAW56,SOT-23,8MM TR	80009	152-5005-00
A9J550	131-2221-00			CONN,HDR:PCB;,MALE,RTANG,2 X 25,0.1 CTR,0.318 MLG X 0.110 TAIL,30 GOLD;,,	22526	65626-150
A9L270	108-5058-00			COIL,RF:	54583	NL453232T-681K
A9L271	108-5057-00			COIL,RF:68UH +/-10%,Q 50, SRF 12 MHZ,DCR 6.0 OHM, I MAX 130 MA12 MM TAPED & REELED, SMD	54583	NL453232T-680K
A9L283	108-5037-00			COIL,RF:INDUCTOR,;22UH,10%,50 @ 2.52MHZ,SRF=20MHZ,DCR=3.2 OHMS,1DC=180;SMD, 12MM T&R	54583	NL453232T-220K
A9L496	108-1262-00			COIL,RF:FXD,100UH,10%,Q=30,SRF 8.2MHZ,DCR 0.23 OHM,I MAX 0.75ARADIAL LEAD	80009	108-1262-00
A9L498	108-1262-00			COIL,RF:FXD,100UH,10%,Q=30,SRF 8.2MHZ,DCR 0.23 OHM,I MAX 0.75ARADIAL LEAD	80009	108-1262-00
A9P9	131-3556-00			CONN,RCPT,ELEC:CARD CONN,2 X 12,HORIZ	22526	66527-012
A9Q163	151-5001-00			TRANSISTOR,SIG:BIPOLAR,NPN;40V,200MA,300MHZ,AMPLIFIER;MMBT3904L,TO-236/SOT-23,8MM T&R	80009	151-5001-00
A9Q164	151-5001-00			TRANSISTOR,SIG:BIPOLAR,NPN;40V,200MA,300MHZ,AMPLIFIER;MMBT3904L,TO-236/SOT-23,8MM T&R	80009	151-5001-00
A9Q490	151-5005-00			TRANSISTOR,SIG:BIPOLAR,PNP;20V,1.0A,60MHZ,AMPLIFIER;BCX69/BC869,SOT-89,12MM T/R	04713	BCX69T1
A9Q492	151-5000-00			TRANSISTOR,SIG:BIPOLAR,PNP;40V,200MA,250MHZ,AMPLIFIER;MMBT3906L,TO-236/SOT-23,8MM T&R	04713	MMBT3906LT1
A9Q532	151-5001-00			TRANSISTOR,SIG:BIPOLAR,NPN;40V,200MA,300MHZ,AMPLIFIER;MMBT3904L,TO-236/SOT-23,8MM T&R	80009	151-5001-00
A9R161	321-5025-00			RES,FXD:METAL FILM;3.92K OHM,1%,0.125W,TC=100 PPM;1206,T&R	80009	321-5025-00
A9R162	321-5028-00			RES,FXD:METAL FILM;6.81K OHM,1%,0.125W,TC=100 PPM;1206,T&R	80009	321-5028-00
A9R166	321-5018-00			RES,FXD:METAL FILM;1.0K OHM,1%,0.125W,TC=100 PPM;1206,T&R	80009	321-5018-00
A9R170	321-5030-00			RES,FXD:METAL FILM;10.0K OHM,1%,0.125W,TC=100 PPM;1206,T&R	80009	321-5030-00
A9R172	321-5030-00			RES,FXD:METAL FILM;10.0K OHM,1%,0.125W,TC=100 PPM;1206,T&R	80009	321-5030-00
A9R173	321-5014-00			RES,FXD:METAL FILM;475 OHM,1%,0.125W,TC=100 PPM;1206,T&R	80009	321-5014-00
A9R174	321-5014-00			RES,FXD:METAL FILM;475 OHM,1%,0.125W,TC=100 PPM;1206,T&R	80009	321-5014-00
A9R176	321-5047-00			RES,FXD:METAL FILM;100K OHM,1%,0.125W,TC=100 PPM;1206,T&R	80009	321-5047-00
A9R177	321-5047-00			RES,FXD:METAL FILM;100K OHM,1%,0.125W,TC=100 PPM;1206,T&R	80009	321-5047-00
A9R180	311-1248-00			RES,VAR,NONWW:TRMR,500 OHM,0.5W	80009	311-1248-00
A9R181	321-5018-00			RES,FXD:METAL FILM;1.0K OHM,1%,0.125W,TC=100 PPM;1206,T&R	80009	321-5018-00
A9R182	321-5047-00			RES,FXD:METAL FILM;100K OHM,1%,0.125W,TC=100 PPM;1206,T&R	80009	321-5047-00
A9R183	321-5034-00			RES,FXD:METAL FILM;22.1K OHM,1%,0.125W,TC=100 PPM;1206,T&R	80009	321-5034-00
A9R184	311-1239-00			RES,VAR,TRMR:CERMET;2.5K OHM,10%,0.5W,0.375 SQ,SIDE ADJUST	80009	311-1239-00
A9R186	321-5014-00			RES,FXD:METAL FILM;475 OHM,1%,0.125W,TC=100 PPM;1206,T&R	80009	321-5014-00
A9R187	321-5014-00			RES,FXD:METAL FILM;475 OHM,1%,0.125W,TC=100 PPM;1206,T&R	80009	321-5014-00
A9R188	311-1248-00			RES,VAR,NONWW:TRMR,500 OHM,0.5W	80009	311-1248-00

Component No.	Tektronix Part No.	Serial/Assembly No. Effective	Dscont	Name & Description	Mfr. Code	Mfr. Part No.
A9R190	311-1237-00			RES,VAR,NONWW:1K OHM,10%,0.50W	80009	311-1237-00
A9R226	321-5018-00			RES,FXD:METAL FILM;1.0K OHM,1%,0.125W,TC=100 PPM;1206,T&R	80009	321-5018-00
A9R262	321-5018-00			RES,FXD:METAL FILM;1.0K OHM,1%,0.125W,TC=100 PPM;1206,T&R	80009	321-5018-00
A9R264	321-5018-00			RES,FXD:METAL FILM;1.0K OHM,1%,0.125W,TC=100 PPM;1206,T&R	80009	321-5018-00
A9R266	321-5018-00			RES,FXD:METAL FILM;1.0K OHM,1%,0.125W,TC=100 PPM;1206,T&R	80009	321-5018-00
A9R280	321-5006-00			RES,FXD:METAL FILM;100 OHM,1%,0.125W,TC=100 PPM;1206,T&R	80009	321-5006-00
A9R281	321-5020-00			RES,FXD:METAL FILM;1.5K OHM,1%,0.125W,TC=100 PPM;1206,T&R	80009	321-5020-00
A9R282	321-5020-00			RES,FXD:METAL FILM;1.5K OHM,1%,0.125W,TC=100 PPM;1206,T&R	80009	321-5020-00
A9R286	321-5032-00			RES,FXD:METAL FILM;15.0K OHM,1%,0.125W,TC=100 PPM;1206,T&R	80009	321-5032-00
A9R288	321-5043-00			RES,FXD:METAL FILM;47.5 OHM,1%,0.125W,TC=100 PPM;1206,T&R	80009	321-5043-00
A9R298	321-5047-00			RES,FXD:METAL FILM;100K OHM,1%,0.125W,TC=100 PPM;1206,T&R	80009	321-5047-00
A9R299	321-5018-00			RES,FXD:METAL FILM;1.0K OHM,1%,0.125W,TC=100 PPM;1206,T&R	80009	321-5018-00
A9R370	321-5018-00			RES,FXD:METAL FILM;1.0K OHM,1%,0.125W,TC=100 PPM;1206,T&R	80009	321-5018-00
A9R371	321-5030-00			RES,FXD:METAL FILM;10.0K OHM,1%,0.125W,TC=100 PPM;1206,T&R	80009	321-5030-00
A9R372	321-5018-00			RES,FXD:METAL FILM;1.0K OHM,1%,0.125W,TC=100 PPM;1206,T&R	80009	321-5018-00
A9R373	321-5015-00			RES,FXD:METAL FILM;562 OHM,1%,0.125W,TC=100 PPM;1206,T&R	80009	321-5015-00
A9R374	321-5018-00			RES,FXD:METAL FILM;1.0K OHM,1%,0.125W,TC=100 PPM;1206,T&R	80009	321-5018-00
A9R376	321-5000-00			RES,FXD:METAL FILM;10 OHM,1%,0.125W,TC=100 PPM;1206,T&R	57668	MCR18EZHFW10E
A9R377	321-5048-00			RES,FXD:METAL FILM;332K OHM,1%,0.125W,TC=100 PPM;1206,T&R	80009	321-5048-00
A9R378	321-5049-00			RES,FXD:METAL FILM;1M OHM,1%,0.125W,TC=100 PPM;1206,T&R	80009	321-5049-00
A9R379	321-5019-00			RES,FXD:METAL FILM;1.21K OHM,1%,0.125W,TC=100 PPM;1206,T&R	80009	321-5019-00
A9R380	321-5006-00			RES,FXD:METAL FILM;100 OHM,1%,0.125W,TC=100 PPM;1206,T&R	80009	321-5006-00
A9R381	321-5018-00			RES,FXD:METAL FILM;1.0K OHM,1%,0.125W,TC=100 PPM;1206,T&R	80009	321-5018-00
A9R382	321-5048-00			RES,FXD:METAL FILM;332K OHM,1%,0.125W,TC=100 PPM;1206,T&R	80009	321-5048-00
A9R383	321-5049-00			RES,FXD:METAL FILM;1M OHM,1%,0.125W,TC=100 PPM;1206,T&R	80009	321-5049-00
A9R384	321-5019-00			RES,FXD:METAL FILM;1.21K OHM,1%,0.125W,TC=100 PPM;1206,T&R	80009	321-5019-00
A9R385	321-5035-00			RES,FXD:METAL FILM;27.4K OHM,1%,0.125W,TC=100 PPM;1206,T&R	80009	321-5035-00
A9R386	321-5030-00			RES,FXD:METAL FILM;10.0K OHM,1%,0.125W,TC=100 PPM;1206,T&R	80009	321-5030-00
A9R387	321-5026-00			RES,FXD:METAL FILM;4.75K OHM,1%,0.125W,TC=100 PPM;1206,T&R	80009	321-5026-00
A9R388	321-5030-00			RES,FXD:METAL FILM;10.0K OHM,1%,0.125W,TC=100 PPM;1206,T&R	80009	321-5030-00

Component No.	Tektronix Part No.	Serial/Assembly No. Effective	Dscont	Name & Description	Mfr. Code	Mfr. Part No.
A9R389	321-5026-00			RES,FXD:METAL FILM;4.75K OHM,1%,0.125W,TC=100 PPM;1206,T&R	80009	321-5026-00
A9R390	321-5026-00			RES,FXD:METAL FILM;4.75K OHM,1%,0.125W,TC=100 PPM;1206,T&R	80009	321-5026-00
A9R391	321-5047-00			RES,FXD:METAL FILM;100K OHM,1%,0.125W,TC=100 PPM;1206,T&R	80009	321-5047-00
A9R392	321-5018-00			RES,FXD:METAL FILM;1.0K OHM,1%,0.125W,TC=100 PPM;1206,T&R	80009	321-5018-00
A9R393	321-5043-00			RES,FXD:METAL FILM;47.5 OHM,1%,0.125W,TC=100 PPM;1206,T&R	80009	321-5043-00
A9R394	321-5030-00			RES,FXD:METAL FILM;10.0K OHM,1%,0.125W,TC=100 PPM;1206,T&R	80009	321-5030-00
A9R430	321-5028-00			RES,FXD:METAL FILM;6.81K OHM,1%,0.125W,TC=100 PPM;1206,T&R	80009	321-5028-00
A9R436	321-5028-00			RES,FXD:METAL FILM;6.81K OHM,1%,0.125W,TC=100 PPM;1206,T&R	80009	321-5028-00
A9R470	321-5000-00			RES,FXD:METAL FILM;10 OHM,1%,0.125W,TC=100 PPM;1206,T&R	57668	MCR18EZHFW10E
A9R476	321-5023-00			RES,FXD:METAL FILM;2.74K OHM,1%,0.125W,TC=100 PPM;1206,T&R	80009	321-5023-00
A9R478	321-5023-00			RES,FXD:METAL FILM;2.74K OHM,1%,0.125W,TC=100 PPM;1206,T&R	80009	321-5023-00
A9R483	321-5018-00			RES,FXD:METAL FILM;1.0K OHM,1%,0.125W,TC=100 PPM;1206,T&R	80009	321-5018-00
A9R484	321-5040-00			RES,FXD:METAL FILM;68.1K OHM,1%,0.125W,TC=100 PPM;1206,T&R	80009	321-5040-00
A9R485	321-5030-00			RES,FXD:METAL FILM;10.0K OHM,1%,0.125W,TC=100 PPM;1206,T&R	80009	321-5030-00
A9R486	321-5030-00			RES,FXD:METAL FILM;10.0K OHM,1%,0.125W,TC=100 PPM;1206,T&R	80009	321-5030-00
A9R494	321-5030-00			RES,FXD:METAL FILM;10.0K OHM,1%,0.125W,TC=100 PPM;1206,T&R	80009	321-5030-00
A9R496	321-5025-00			RES,FXD:METAL FILM;3.92K OHM,1%,0.125W,TC=100 PPM;1206,T&R	80009	321-5025-00
A9R532	321-5030-00			RES,FXD:METAL FILM;10.0K OHM,1%,0.125W,TC=100 PPM;1206,T&R	80009	321-5030-00
A9R534	321-5030-00			RES,FXD:METAL FILM;10.0K OHM,1%,0.125W,TC=100 PPM;1206,T&R	80009	321-5030-00
A9R538	321-5018-00			RES,FXD:METAL FILM;1.0K OHM,1%,0.125W,TC=100 PPM;1206,T&R	80009	321-5018-00
A9R562	321-5030-00			RES,FXD:METAL FILM;10.0K OHM,1%,0.125W,TC=100 PPM;1206,T&R	80009	321-5030-00
A9R570	321-5020-00			RES,FXD:METAL FILM;1.5K OHM,1%,0.125W,TC=100 PPM;1206,T&R	80009	321-5020-00
A9R574	321-5023-00			RES,FXD:METAL FILM;2.74K OHM,1%,0.125W,TC=100 PPM;1206,T&R	80009	321-5023-00
A9R576	321-5023-00			RES,FXD:METAL FILM;2.74K OHM,1%,0.125W,TC=100 PPM;1206,T&R	80009	321-5023-00
A9R578	321-5023-00			RES,FXD:METAL FILM;2.74K OHM,1%,0.125W,TC=100 PPM;1206,T&R	80009	321-5023-00
A9R978	311-1248-00			RES,VAR,NONWW:TRMR,500 OHM,0.5W	80009	311-1248-00
A9R982	311-1245-00			RES,VAR,NONWW:TRMR,10K OHM,0.5W	80009	311-1245-00
A9R986	311-1236-00			RES,VAR,NONWW:TRMR,250 OHM,0.5W	80009	311-1236-00
A9R992	311-1245-00			RES,VAR,NONWW:TRMR,10K OHM,0.5W	80009	311-1245-00
A9U104	156-5130-00			IC,DIGITAL:HCTCMOS,GATE;TRIPLE 3-INPUT NAND ;74HCT10,SO14.150,TUBE	80009	156-5130-00
A9U108	156-5148-00			IC,DIGITAL:HCTCMOS,MUX;QUAD 2-TO-1 DATA SELECTOR, 3-STATE;74HCT257,SO16.150,TUBE	80009	156-5148-00

Component No.	Tektronix Part No.	Serial/Assembly No. Effective	Dscont	Name & Description	Mfr. Code	Mfr. Part No.
A9U114	156-5237-00			IC,DIGITAL:LSTTL,COMPARATOR;8-BIT MAGNITUDE ;74LS682,SO20.300,TUBE	80009	156-5237-00
A9U120	156-5236-00			IC,DIGITAL:	80009	156-5236-00
A9U130	156-1170-00			MICROCKT,DGTL:TTL,ROM,CHAR GEN	27014	DM86S64CAB/N
A9U131	156-3217-00			IC,MISC:	80009	156-3217-00
A9U132	156-5203-00			MICROCKT,DGTL:LSTTL,4 BIT FULL ADDER	80009	156-5203-00
A9U140	156-5134-00			IC,DIGITAL:HCTCMOS,COUNTER;SYNCH 4-BIT BINA RY;74HCT161,SO16.150,TUBE	80009	156-5134-00
A9U146	160-5006-00			MICROCKT,DGTL:STTL,PLD,FPLS,PRGM	80009	160-5006-00
A9U154	156-5198-00			IC,DIGITAL:HCTCMOS,GATE;QUAD 2-INPUT XOR;74 HCT86,SO14.150	80009	156-5198-00
A9U160	156-5289-00			IC,DIGITAL:HCTCMOS,FLIP FLOP;OCTAL D-TYPE, 3-STATE;74HCT574,SO20.300,TUBE	80009	156-5289-00
A9U204	156-5172-00			IC,DIGITAL:LSTTL,GATE;TRIPLE 3-INPUT NOR;74 LS27,SO14.150,TUBE	04713	SN74LS27
A9U206	156-5148-00			IC,DIGITAL:HCTCMOS,MUX;QUAD 2-TO-1 DATA SEL ECTOR, 3-STATE;74HCT257,SO16.150,TUBE	80009	156-5148-00
A9U208	160-5013-01			MICROCKT,DGTL:STTL,PLD,FPLS,PRGM	80009	160-5013-01
A9U214	156-5289-00			IC,DIGITAL:HCTCMOS,FLIP FLOP;OCTAL D-TYPE, 3-STATE;74HCT574,SO20.300,TUBE	80009	156-5289-00
A9U219	156-5289-00			IC,DIGITAL:HCTCMOS,FLIP FLOP;OCTAL D-TYPE, 3-STATE;74HCT574,SO20.300,TUBE	80009	156-5289-00
A9U220	156-5148-00			IC,DIGITAL:HCTCMOS,MUX;QUAD 2-TO-1 DATA SEL ECTOR, 3-STATE;74HCT257,SO16.150,TUBE	80009	156-5148-00
A9U224	156-5074-00			IC,DIGITAL:HCMOS,FLIP FLOP;DUAL D-TYPE;74HC 74,SO14.150,TUBE	80009	156-5074-00
A9U226	156-5148-00			IC,DIGITAL:HCTCMOS,MUX;QUAD 2-TO-1 DATA SEL ECTOR, 3-STATE;74HCT257,SO16.150,TUBE	80009	156-5148-00
A9U228	156-5198-00			IC,DIGITAL:HCTCMOS,GATE;QUAD 2-INPUT XOR;74 HCT86,SO14.150	80009	156-5198-00
A9U232	156-5203-00			MICROCKT,DGTL:LSTTL,4 BIT FULL ADDER	80009	156-5203-00
A9U234	160-5011-00			MICROCKT,DGTL:STTL,PLD,FPLA,PRGM	80009	160-5011-00
A9U236	156-5285-00			IC,DIGITAL:FTTL,COUNTER;SYNCH 4-BIT UP/DOWN BINARY, WITH SEPARATE CP;74F193,SO16.150,T UBE	80009	156-5285-00
A9U240	156-5134-00			IC,DIGITAL:HCTCMOS,COUNTER;SYNCH 4-BIT BINA RY;74HCT161,SO16.150,TUBE	80009	156-5134-00
A9U242	156-5285-00			IC,DIGITAL:FTTL,COUNTER;SYNCH 4-BIT UP/DOWN BINARY, WITH SEPARATE CP;74F193,SO16.150,T UBE	80009	156-5285-00
A9U244	156-5112-00			IC,DIGITAL:LSTTL,FLIP FLOP;DUAL J-K, PRESET , CLEAR;74LS109,SO16.150,TUBE	80009	156-5112-00
A9U246	156-5285-00			IC,DIGITAL:FTTL,COUNTER;SYNCH 4-BIT UP/DOWN BINARY, WITH SEPARATE CP;74F193,SO16.150,T UBE	80009	156-5285-00
A9U254	156-5238-00			IC,DIGITAL:HCMOS,GATE;8-INPUT OR/NOR;74HC40 78,SO14.150,TUBE	80009	156-5238-00
A9U256	160-5004-00			MICROCKT,DGTL:STTL,PLD,FPLS,PRGM	80009	160-5004-00
A9U260	160-5007-00			MICROCKT,DGTL:STTL,PLD,FPLS,PRGM	80009	160-5007-00
A9U270	156-5203-00			MICROCKT,DGTL:LSTTL,4 BIT FULL ADDER	80009	156-5203-00
A9U274	156-5081-01			IC,DIGITAL:HCTMOS,GATE;HEX INVERTER;74HCT04 ,SO14.150,16MM T&R	80009	156-5081-01
A9U280	156-5043-01			IC,CONVERTER:BIPOLAR,D/A;8 BIT,CURRENT OUT, MULTIPLYING;DAC08ED,SO16.150,16MM T&R	80009	156-5043-01
A9U284	156-5095-01			IC,LINEAR:BIPOLAR,OP-AMP;LOW NOISE,HIGH OUT PUT DRIVE;NE5534D,SO8.150,12MM T&R	80009	156-5095-01
A9U292	156-5119-00			IC,LINEAR:BIPOLAR,COMPARATOR;DUAL,OPEN COLL ECTOR,80NS;LM319D,SO14.150,TUBE	80009	156-5119-00
A9U304	156-5237-00			IC,DIGITAL:LSTTL,COMPARATOR;8-BIT MAGNITUDE ;74LS682,SO20.300,TUBE	80009	156-5237-00

Component No.	Tektronix Part No.	Serial/Assembly No. Effective	Dscont	Name & Description	Mfr. Code	Mfr. Part No.
A9U308	160-5005-00			MICROCKT,DGTL:STTL,PLD,FPLS,PRGM	80009	160-5005-00
A9U318	160-5012-00			MICROCKT,DGTL:STTL,PLD,FPLS,PRGM	80009	160-5012-00
A9U324	156-5081-01			IC,DIGITAL:HCTMOS,GATE;HEX INVERTER;74HCT04 ,SO14.150,16MM T&R	80009	156-5081-01
A9U326	156-5103-00			IC,DIGITAL:HCMOS,COUNTER;DUAL 4-BIT BINARY RIPPLE;74HC393,SO14.150,TUBE	80009	156-5103-00
A9U334	156-5103-00			IC,DIGITAL:HCMOS,COUNTER;DUAL 4-BIT BINARY RIPPLE;74HC393,SO14.150,TUBE	80009	156-5103-00
A9U336	156-5220-01			IC,DIGITAL:HCTCMOS,BUFFER;OCTAL BUFFER/DRIV ER, 3-STATE;74HCT541,SO20.300,24MM T&R	80009	156-5220-01
A9U342	156-5220-01			IC,DIGITAL:HCTCMOS,BUFFER;OCTAL BUFFER/DRIV ER, 3-STATE;74HCT541,SO20.300,24MM T&R	80009	156-5220-01
A9U352	160-5008-00			MICROCKT,DGTL:STTL,PLD,FPLA,PRGM	80009	160-5008-00
A9U360	160-5002-00			MICROCKT,DGTL:STTL,PLD,FPLS,PRGM	80009	160-5002-00
A9U368	156-2800-00			IC,CONVERTER:BIPOLAR,A/D;8-BIT,25MSPS,FLASH ,1W;MC10319,DIP24.6	80009	156-2800-00
A9U376	156-5095-01			IC,LINEAR:BIPOLAR,OP-AMP;LOW NOISE,HIGH OUT PUT DRIVE;NE5534D,SO8.150,12MM T&R	80009	156-5095-01
A9U392	156-5095-01			IC,LINEAR:BIPOLAR,OP-AMP;LOW NOISE,HIGH OUT PUT DRIVE;NE5534D,SO8.150,12MM T&R	80009	156-5095-01
A9U408	156-5172-00			IC,DIGITAL:LSTTL,GATE;TRIPLE 3-INPUT NOR;74 LS27,SO14.150,TUBE	04713	SN74LS27
A9U420	156-5220-01			IC,DIGITAL:HCTCMOS,BUFFER;OCTAL BUFFER/DRIV ER, 3-STATE;74HCT541,SO20.300,24MM T&R	80009	156-5220-01
A9U428	156-5235-00			IC,DIGITAL:	80009	156-5235-00
A9U436	156-5286-00			IC,MEMORY:CMOS,SRAM;32K X 8,120NS,50UA,OE;4 3256,SO28M.330,TUBE	80009	156-5286-00
A9U438	156-5142-00			IC,DIGITAL:HCTCMOS,DEMUX/DECODER;DUAL 2-TO- 4 DECODER;74HCT139,SO16.150,TUBE	80009	156-5142-00
A9U446	156-5220-01			IC,DIGITAL:HCTCMOS,BUFFER;OCTAL BUFFER/DRIV ER, 3-STATE;74HCT541,SO20.300,24MM T&R	80009	156-5220-01
A9U448	156-5220-01			IC,DIGITAL:HCTCMOS,BUFFER;OCTAL BUFFER/DRIV ER, 3-STATE;74HCT541,SO20.300,24MM T&R	80009	156-5220-01
A9U452	156-5220-01			IC,DIGITAL:HCTCMOS,BUFFER;OCTAL BUFFER/DRIV ER, 3-STATE;74HCT541,SO20.300,24MM T&R	80009	156-5220-01
A9U454	156-5220-01			IC,DIGITAL:HCTCMOS,BUFFER;OCTAL BUFFER/DRIV ER, 3-STATE;74HCT541,SO20.300,24MM T&R	80009	156-5220-01
A9U460	156-5289-00			IC,DIGITAL:HCTCMOS,FLIP FLOP;OCTAL D-TYPE, 3-STATE;74HCT574,SO20.300,TUBE	80009	156-5289-00
A9U462	156-5016-00			IC,DIGITAL:LSTTL,BUS TRANSCEIVER;OCTAL, NON INV, 3-STATE;74LS245,SO20.300,TUBE	80009	156-5016-00
A9U464	160-5003-00			MICROCKT,DGTL:STTL,PLD,FPLS,PRGM	80009	160-5003-00
A9U474	156-5043-01			IC,CONVERTER:BIPOLAR,D/A;8 BIT,CURRENT OUT, MULTIPLYING;DAC08ED,SO16.150,16MM T&R	80009	156-5043-01
A9U476	156-5095-01			IC,LINEAR:BIPOLAR,OP-AMP;LOW NOISE,HIGH OUT PUT DRIVE;NE5534D,SO8.150,12MM T&R	80009	156-5095-01
A9U484	156-5274-01			IC,MISC:CMOS,ANALOG SWITCH;QUAD;DG211,SO16. 150,16MM T&R	80009	156-5274-01
A9U486	156-5018-00			IC,LINEAR:BIPOLAR,OP-AMP;DUAL,SINGLE SUPPLY ;LM358D,SO8.150,TUBE	80009	156-5018-00
A9U488	156-5088-00			IC,DIGITAL:HCTCMOS,DEMUX/DECODER;3-TO-8 DEC ODER;74HCT138,SO16.150,TUBE	80009	156-5088-00
A9U494	156-0991-00			IC,LINEAR:BIPOLAR,VOLTAGE REGULATOR;POSITIV E,5.0V,100MA,5%;MC78L05ACP,TO-92	80009	156-0991-00
A9U506	156-5134-00			IC,DIGITAL:HCTCMOS,COUNTER;SYNCH 4-BIT BINA RY;74HCT161,SO16.150,TUBE	80009	156-5134-00
A9U520	156-5237-00			IC,DIGITAL:LSTTL,COMPARATOR;8-BIT MAGNITUDE ;74LS682,SO20.300,TUBE	80009	156-5237-00
A9U524	156-5235-00			IC,DIGITAL:	80009	156-5235-00

Component No.	Tektronix Part No.	Serial/Assembly No. Effective	Dscont	Name & Description	Mfr. Code	Mfr. Part No.
A9U526	156-5220-01			IC,DIGITAL:HCTCMOS,BUFFER;OCTAL BUFFER/DRIVER, 3-STATE;74HCT541,SO20.300,24MM T&R	80009	156-5220-01
A9U566	156-5171-00			IC,DIGITAL:LSTTL,GATE;TRIPLE 3-INPUT AND;74LS11,SO14.150,TUBE	04713	SN74LS11D
A9U574	156-5043-01			IC,CONVERTER:BIPOLAR,D/A;8 BIT,CURRENT OUT,MULTIPLYING;DAC08ED,SO16.150,16MM T&R	80009	156-5043-01
A10	671-0653-14			CIRCUIT BD ASSY:MICROPROCESSOR	80009	671-0653-14
A10C110	283-5004-00			CAP,FXD,CER DI:0.1UF,10%,25V	80009	283-5004-00
A10C128	283-5004-00			CAP,FXD,CER DI:0.1UF,10%,25V	80009	283-5004-00
A10C174	283-5004-00			CAP,FXD,CER DI:0.1UF,10%,25V	80009	283-5004-00
A10C175	283-5004-00			CAP,FXD,CER DI:0.1UF,10%,25V	80009	283-5004-00
A10C183	283-5004-00			CAP,FXD,CER DI:0.1UF,10%,25V	80009	283-5004-00
A10C184	283-5004-00			CAP,FXD,CER DI:0.1UF,10%,25V	80009	283-5004-00
A10C210	283-5004-00			CAP,FXD,CER DI:0.1UF,10%,25V	80009	283-5004-00
A10C228	283-5003-00			CAP,FXD,CER DI:0.01UF,10%,50V	80009	283-5003-00
A10C261	283-5001-00			CAP,FXD,CER DI:100PF,5%,50V	80009	283-5001-00
A10C275	283-5003-00			CAP,FXD,CER DI:0.01UF,10%,50V	80009	283-5003-00
A10C280	283-5003-00			CAP,FXD,CER DI:0.01UF,10%,50V	80009	283-5003-00
A10C295	283-5004-00			CAP,FXD,CER DI:0.1UF,10%,25V	80009	283-5004-00
A10C310	283-5004-00			CAP,FXD,CER DI:0.1UF,10%,25V	80009	283-5004-00
A10C328	283-5004-00			CAP,FXD,CER DI:0.1UF,10%,25V	80009	283-5004-00
A10C361	283-5011-00			CAP,FXD,CER DI:33PF,5%,50V	95275	VJ1206A330JXA
A10C362	283-5011-00			CAP,FXD,CER DI:33PF,5%,50V	95275	VJ1206A330JXA
A10C365	283-5004-00			CAP,FXD,CER DI:0.1UF,10%,25V	80009	283-5004-00
A10C370	283-5004-00			CAP,FXD,CER DI:0.1UF,10%,25V	80009	283-5004-00
A10C380	283-5003-00			CAP,FXD,CER DI:0.01UF,10%,50V	80009	283-5003-00
A10C385	283-5004-00			CAP,FXD,CER DI:0.1UF,10%,25V	80009	283-5004-00
A10C395	283-5003-00			CAP,FXD,CER DI:0.01UF,10%,50V	80009	283-5003-00
A10C410	283-5004-00			CAP,FXD,CER DI:0.1UF,10%,25V	80009	283-5004-00
A10C428	283-5003-00			CAP,FXD,CER DI:0.01UF,10%,50V	80009	283-5003-00
A10C450	283-5003-00			CAP,FXD,CER DI:0.01UF,10%,50V	80009	283-5003-00
A10C460	283-5004-00			CAP,FXD,CER DI:0.1UF,10%,25V	80009	283-5004-00
A10C465	283-5003-00			CAP,FXD,CER DI:0.01UF,10%,50V	80009	283-5003-00
A10C470	283-5004-00			CAP,FXD,CER DI:0.1UF,10%,25V	80009	283-5004-00
A10C480	283-5003-00			CAP,FXD,CER DI:0.01UF,10%,50V	80009	283-5003-00
A10C485	283-5004-00			CAP,FXD,CER DI:0.1UF,10%,25V	80009	283-5004-00
A10C510	283-5003-00			CAP,FXD,CER DI:0.01UF,10%,50V	80009	283-5003-00
A10C527	283-5001-00			CAP,FXD,CER DI:100PF,5%,50V	80009	283-5001-00
A10C528	283-5003-00			CAP,FXD,CER DI:0.01UF,10%,50V	80009	283-5003-00
A10C529	283-5004-00			CAP,FXD,CER DI:0.1UF,10%,25V	80009	283-5004-00
A10C540	283-5004-00			CAP,FXD,CER DI:0.1UF,10%,25V	80009	283-5004-00
A10C550	283-5004-00			CAP,FXD,CER DI:0.1UF,10%,25V	80009	283-5004-00
A10C565	283-5004-00			CAP,FXD,CER DI:0.1UF,10%,25V	80009	283-5004-00
A10C570	283-5003-00			CAP,FXD,CER DI:0.01UF,10%,50V	80009	283-5003-00
A10C580	283-5004-00			CAP,FXD,CER DI:0.1UF,10%,25V	80009	283-5004-00
A10C595	283-5003-00			CAP,FXD,CER DI:0.01UF,10%,50V	80009	283-5003-00
A10C715	290-0944-00			CAP,FXD,ELCTLT:220UF,+50-20%,10V	55680	UVX1C221MPA
A10C760	283-5004-00			CAP,FXD,CER DI:0.1UF,10%,25V	80009	283-5004-00
A10C830	290-0944-00			CAP,FXD,ELCTLT:220UF,+50-20%,10V	55680	UVX1C221MPA
A10C880	283-5004-00			CAP,FXD,CER DI:0.1UF,10%,25V	80009	283-5004-00
A10C885	290-0944-00			CAP,FXD,ELCTLT:220UF,+50-20%,10V	55680	UVX1C221MPA
A10C890	283-5003-00			CAP,FXD,CER DI:0.01UF,10%,50V	80009	283-5003-00
A10C895	283-5004-00			CAP,FXD,CER DI:0.1UF,10%,25V	80009	283-5004-00
A10C960	290-0944-00			CAP,FXD,ELCTLT:220UF,+50-20%,10V	55680	UVX1C221MPA
A10C961	283-5004-00			CAP,FXD,CER DI:0.1UF,10%,25V	80009	283-5004-00
A10C975	290-0944-00			CAP,FXD,ELCTLT:220UF,+50-20%,10V	55680	UVX1C221MPA
A10C978	283-5003-00			CAP,FXD,CER DI:0.01UF,10%,50V	80009	283-5003-00
A10C982	283-5004-00			CAP,FXD,CER DI:0.1UF,10%,25V	80009	283-5004-00
A10C987	283-5004-00			CAP,FXD,CER DI:0.1UF,10%,25V	80009	283-5004-00

Component No.	Tektronix Part No.	Serial/Assembly No. Effective	Dscont	Name & Description	Mfr. Code	Mfr. Part No.
A10C990	283-5004-00			CAP,FXD,CER DI:0.1UF,10%,25V	80009	283-5004-00
A10C995	283-5001-00			CAP,FXD,CER DI:100PF,5%,50V	80009	283-5001-00
A10J180	131-0391-01			CONN,RF JACK:	80009	131-0391-01
A10J185	131-0391-01			CONN,RF JACK:	80009	131-0391-01
A10J190	131-0391-01			CONN,RF JACK:	80009	131-0391-01
A10J195	131-0391-01			CONN,RF JACK:	80009	131-0391-01
A10J528	131-1857-00			CONN,HDR:PCB,;MALE,STR,1 X 36,0.1 CTR,0.230 MLG X 0.100 TAIL,GOLD;,,	58050	082-3644-SS10
A10J550	131-2221-00			CONN,HDR:PCB;,MALE,RTANG,2 X 25,0.1 CTR,0.3 18 MLG X 0.110 TAIL,30 GOLD;,,	22526	65626-150
A10L350	108-5023-00			COIL,RF:FXD,5.6UH,20%,Q=50, SRF 40 MHZ, DCR 1.1 OHM, I MAX	54583	NL453232T-5R6M
A10P10	131-3556-00			CONN,RCPT,ELEC:CARD CONN,2 X 12,HORIZ	22526	66527-012
A10Q175	151-5001-00			TRANSISTOR,SIG:BIPOLAR,NPN;40V,200MA,300MHZ ,AMPLIFIER;MMBT3904L,TO-236/SOT-23,8MM T&R	80009	151-5001-00
A10Q194	151-5016-00			TRANSISTOR,SIG:BIPOLAR,PNP;20V,30MA,600MHZ, AMPLIFIER;MMBTH81L,TO-236/SOT-23,8MM T&R	80009	151-5016-00
A10Q195	151-5016-00			TRANSISTOR,SIG:BIPOLAR,PNP;20V,30MA,600MHZ, AMPLIFIER;MMBTH81L,TO-236/SOT-23,8MM T&R	80009	151-5016-00
A10Q196	151-5001-00			TRANSISTOR,SIG:BIPOLAR,NPN;40V,200MA,300MHZ ,AMPLIFIER;MMBT3904L,TO-236/SOT-23,8MM T&R	80009	151-5001-00
A10Q197	151-5000-00			TRANSISTOR,SIG:BIPOLAR,PNP;40V,200MA,250MHZ ,AMPLIFIER;MMBT3906L,TO-236/SOT-23,8MM T&R	04713	MMBT3906LT1
A10Q522	151-5001-00			TRANSISTOR,SIG:BIPOLAR,NPN;40V,200MA,300MHZ ,AMPLIFIER;MMBT3904L,TO-236/SOT-23,8MM T&R	80009	151-5001-00
A10Q970	151-5000-00			TRANSISTOR,SIG:BIPOLAR,PNP;40V,200MA,250MHZ ,AMPLIFIER;MMBT3906L,TO-236/SOT-23,8MM T&R	04713	MMBT3906LT1
A10Q973	151-5000-00			TRANSISTOR,SIG:BIPOLAR,PNP;40V,200MA,250MHZ ,AMPLIFIER;MMBT3906L,TO-236/SOT-23,8MM T&R	04713	MMBT3906LT1
A10Q975	151-5000-00			TRANSISTOR,SIG:BIPOLAR,PNP;40V,200MA,250MHZ ,AMPLIFIER;MMBT3906L,TO-236/SOT-23,8MM T&R	04713	MMBT3906LT1
A10Q985	151-5016-00			TRANSISTOR,SIG:BIPOLAR,PNP;20V,30MA,600MHZ, AMPLIFIER;MMBTH81L,TO-236/SOT-23,8MM T&R	80009	151-5016-00
A10Q986	151-5016-00			TRANSISTOR,SIG:BIPOLAR,PNP;20V,30MA,600MHZ, AMPLIFIER;MMBTH81L,TO-236/SOT-23,8MM T&R	80009	151-5016-00
A10R172	321-5018-00			RES,FXD:METAL FILM;1.0K OHM,1%,0.125W,TC=10 0 PPM;1206,T&R	80009	321-5018-00
A10R174	321-5018-00			RES,FXD:METAL FILM;1.0K OHM,1%,0.125W,TC=10 0 PPM;1206,T&R	80009	321-5018-00
A10R175	321-5018-00			RES,FXD:METAL FILM;1.0K OHM,1%,0.125W,TC=10 0 PPM;1206,T&R	80009	321-5018-00
A10R176	321-5015-00			RES,FXD:METAL FILM;562 OHM,1%,0.125W,TC=100 PPM;1206,T&R	80009	321-5015-00
A10R177	321-5018-00			RES,FXD:METAL FILM;1.0K OHM,1%,0.125W,TC=10 0 PPM;1206,T&R	80009	321-5018-00
A10R180	321-5006-00			RES,FXD:METAL FILM;100 OHM,1%,0.125W,TC=100 PPM;1206,T&R	80009	321-5006-00
A10R184	321-5018-00			RES,FXD:METAL FILM;1.0K OHM,1%,0.125W,TC=10 0 PPM;1206,T&R	80009	321-5018-00
A10R185	321-5018-00			RES,FXD:METAL FILM;1.0K OHM,1%,0.125W,TC=10 0 PPM;1206,T&R	80009	321-5018-00
A10R186	321-5018-00			RES,FXD:METAL FILM;1.0K OHM,1%,0.125W,TC=10 0 PPM;1206,T&R	80009	321-5018-00
A10R190	321-5018-00			RES,FXD:METAL FILM;1.0K OHM,1%,0.125W,TC=10 0 PPM;1206,T&R	80009	321-5018-00
A10R191	321-5018-00			RES,FXD:METAL FILM;1.0K OHM,1%,0.125W,TC=10 0 PPM;1206,T&R	80009	321-5018-00
A10R192	321-5006-00			RES,FXD:METAL FILM;100 OHM,1%,0.125W,TC=100 PPM;1206,T&R	80009	321-5006-00

Component No.	Tektronix Part No.	Serial/Assembly No. Effective	Dscont	Name & Description	Mfr. Code	Mfr. Part No.
A10R194	321-5050-00			RES,FXD:METAL FILM;33.2 OHM,1%,0.125W,TC=100 PPM;1206,T&R	57668	MCR18FWEA33E2
A10R196	321-5011-00			RES,FXD:METAL FILM;274 OHM,1%,0.125W,TC=100 PPM;1206,T&R	80009	321-5011-00
A10R197	321-5044-00			RES,FXD:METAL FILM;56.2 OHM,1%,0.125W,TC=100 PPM;1206,T&R	01121	BCD56R2FT
A10R198	321-5044-00			RES,FXD:METAL FILM;56.2 OHM,1%,0.125W,TC=100 PPM;1206,T&R	01121	BCD56R2FT
A10R199	321-5026-00			RES,FXD:METAL FILM;4.75K OHM,1%,0.125W,TC=100 PPM;1206,T&R	80009	321-5026-00
A10R242	321-5026-00			RES,FXD:METAL FILM;4.75K OHM,1%,0.125W,TC=100 PPM;1206,T&R	80009	321-5026-00
A10R250	321-5014-00			RES,FXD:METAL FILM;475 OHM,1%,0.125W,TC=100 PPM;1206,T&R	80009	321-5014-00
A10R260	321-5026-00			RES,FXD:METAL FILM;4.75K OHM,1%,0.125W,TC=100 PPM;1206,T&R	80009	321-5026-00
A10R261	321-5006-00			RES,FXD:METAL FILM;100 OHM,1%,0.125W,TC=100 PPM;1206,T&R	80009	321-5006-00
A10R266	321-5026-00			RES,FXD:METAL FILM;4.75K OHM,1%,0.125W,TC=100 PPM;1206,T&R	80009	321-5026-00
A10R267	321-5026-00			RES,FXD:METAL FILM;4.75K OHM,1%,0.125W,TC=100 PPM;1206,T&R	80009	321-5026-00
A10R280	321-5018-00			RES,FXD:METAL FILM;1.0K OHM,1%,0.125W,TC=100 PPM;1206,T&R	80009	321-5018-00
A10R281	321-5030-00			RES,FXD:METAL FILM;10.0K OHM,1%,0.125W,TC=100 PPM;1206,T&R	80009	321-5030-00
A10R290	321-5011-00			RES,FXD:METAL FILM;274 OHM,1%,0.125W,TC=100 PPM;1206,T&R	80009	321-5011-00
A10R291	321-5004-00			RES,FXD:METAL FILM;22.1 OHM,1%,0.125W,TC=100 PPM;1206,T&R	80009	321-5004-00
A10R292	321-5018-00			RES,FXD:METAL FILM;1.0K OHM,1%,0.125W,TC=100 PPM;1206,T&R	80009	321-5018-00
A10R340	321-5026-00			RES,FXD:METAL FILM;4.75K OHM,1%,0.125W,TC=100 PPM;1206,T&R	80009	321-5026-00
A10R342	321-5026-00			RES,FXD:METAL FILM;4.75K OHM,1%,0.125W,TC=100 PPM;1206,T&R	80009	321-5026-00
A10R344	321-5026-00			RES,FXD:METAL FILM;4.75K OHM,1%,0.125W,TC=100 PPM;1206,T&R	80009	321-5026-00
A10R345	321-5026-00			RES,FXD:METAL FILM;4.75K OHM,1%,0.125W,TC=100 PPM;1206,T&R	80009	321-5026-00
A10R350	321-5006-00			RES,FXD:METAL FILM;100 OHM,1%,0.125W,TC=100 PPM;1206,T&R	80009	321-5006-00
A10R365	321-5026-00			RES,FXD:METAL FILM;4.75K OHM,1%,0.125W,TC=100 PPM;1206,T&R	80009	321-5026-00
A10R370	321-5026-00			RES,FXD:METAL FILM;4.75K OHM,1%,0.125W,TC=100 PPM;1206,T&R	80009	321-5026-00
A10R375	321-5026-00			RES,FXD:METAL FILM;4.75K OHM,1%,0.125W,TC=100 PPM;1206,T&R	80009	321-5026-00
A10R380	321-5026-00			RES,FXD:METAL FILM;4.75K OHM,1%,0.125W,TC=100 PPM;1206,T&R	80009	321-5026-00
A10R420	321-5026-00			RES,FXD:METAL FILM;4.75K OHM,1%,0.125W,TC=100 PPM;1206,T&R	80009	321-5026-00
A10R520	321-5018-00			RES,FXD:METAL FILM;1.0K OHM,1%,0.125W,TC=100 PPM;1206,T&R	80009	321-5018-00
A10R524	321-5026-00			RES,FXD:METAL FILM;4.75K OHM,1%,0.125W,TC=100 PPM;1206,T&R	80009	321-5026-00
A10R526	321-5030-00			RES,FXD:METAL FILM;10.0K OHM,1%,0.125W,TC=100 PPM;1206,T&R	80009	321-5030-00

Component No.	Tektronix Part No.	Serial/Assembly No. Effective	Dscont	Name & Description	Mfr. Code	Mfr. Part No.
A10R527	321-5030-00			RES,FXD:METAL FILM;10.0K OHM,1%,0.125W,TC=100 PPM;1206,T&R	80009	321-5030-00
A10R535	321-5026-00			RES,FXD:METAL FILM;4.75K OHM,1%,0.125W,TC=100 PPM;1206,T&R	80009	321-5026-00
A10R574	321-5034-00			RES,FXD:METAL FILM;22.1K OHM,1%,0.125W,TC=100 PPM;1206,T&R	80009	321-5034-00
A10R696	321-5026-00			RES,FXD:METAL FILM;4.75K OHM,1%,0.125W,TC=100 PPM;1206,T&R	80009	321-5026-00
A10R886	321-5004-00			RES,FXD:METAL FILM;22.1 OHM,1%,0.125W,TC=100 PPM;1206,T&R	80009	321-5004-00
A10R887	321-5018-00			RES,FXD:METAL FILM;1.0K OHM,1%,0.125W,TC=100 PPM;1206,T&R	80009	321-5018-00
A10R890	321-5026-00			RES,FXD:METAL FILM;4.75K OHM,1%,0.125W,TC=100 PPM;1206,T&R	80009	321-5026-00
A10R895	321-5018-00			RES,FXD:METAL FILM;1.0K OHM,1%,0.125W,TC=100 PPM;1206,T&R	80009	321-5018-00
A10R970	321-5007-00			RES,FXD:METAL FILM;121 OHM,1%,0.125W,TC=100 PPM;1206,T&R	80009	321-5007-00
A10R971	321-5018-00			RES,FXD:METAL FILM;1.0K OHM,1%,0.125W,TC=100 PPM;1206,T&R	80009	321-5018-00
A10R972	321-5026-00			RES,FXD:METAL FILM;4.75K OHM,1%,0.125W,TC=100 PPM;1206,T&R	80009	321-5026-00
A10R973	321-5026-00			RES,FXD:METAL FILM;4.75K OHM,1%,0.125W,TC=100 PPM;1206,T&R	80009	321-5026-00
A10R974	321-5018-00			RES,FXD:METAL FILM;1.0K OHM,1%,0.125W,TC=100 PPM;1206,T&R	80009	321-5018-00
A10R975	321-5018-00			RES,FXD:METAL FILM;1.0K OHM,1%,0.125W,TC=100 PPM;1206,T&R	80009	321-5018-00
A10R976	321-5012-00			RES,FXD:METAL FILM;332 OHM,1%,0.125W,TC=100 PPM;1206,T&R	80009	321-5012-00
A10R977	321-5026-00			RES,FXD:METAL FILM;4.75K OHM,1%,0.125W,TC=100 PPM;1206,T&R	80009	321-5026-00
A10R978	321-5044-00			RES,FXD:METAL FILM;56.2 OHM,1%,0.125W,TC=100 PPM;1206,T&R	01121	BCD56R2FT
A10R979	321-5018-00			RES,FXD:METAL FILM;1.0K OHM,1%,0.125W,TC=100 PPM;1206,T&R	80009	321-5018-00
A10R980	321-5026-00			RES,FXD:METAL FILM;4.75K OHM,1%,0.125W,TC=100 PPM;1206,T&R	80009	321-5026-00
A10R981	321-5044-00			RES,FXD:METAL FILM;56.2 OHM,1%,0.125W,TC=100 PPM;1206,T&R	01121	BCD56R2FT
A10R982	321-5015-00			RES,FXD:METAL FILM;562 OHM,1%,0.125W,TC=100 PPM;1206,T&R	80009	321-5015-00
A10R984	321-5004-00			RES,FXD:METAL FILM;22.1 OHM,1%,0.125W,TC=100 PPM;1206,T&R	80009	321-5004-00
A10R985	321-5011-00			RES,FXD:METAL FILM;274 OHM,1%,0.125W,TC=100 PPM;1206,T&R	80009	321-5011-00
A10R986	321-5011-00			RES,FXD:METAL FILM;274 OHM,1%,0.125W,TC=100 PPM;1206,T&R	80009	321-5011-00
A10R987	321-5018-00			RES,FXD:METAL FILM;1.0K OHM,1%,0.125W,TC=100 PPM;1206,T&R	80009	321-5018-00
A10R990	321-5018-00			RES,FXD:METAL FILM;1.0K OHM,1%,0.125W,TC=100 PPM;1206,T&R	80009	321-5018-00
A10R991	321-5018-00			RES,FXD:METAL FILM;1.0K OHM,1%,0.125W,TC=100 PPM;1206,T&R	80009	321-5018-00
A10R992	321-5015-00			RES,FXD:METAL FILM;562 OHM,1%,0.125W,TC=100 PPM;1206,T&R	80009	321-5015-00
A10R993	321-5018-00			RES,FXD:METAL FILM;1.0K OHM,1%,0.125W,TC=100 PPM;1206,T&R	80009	321-5018-00

Component No.	Tektronix Part No.	Serial/Assembly No. Effective	Dscont	Name & Description	Mfr. Code	Mfr. Part No.
A10R994	321-5044-00			RES,FXD:METAL FILM;56.2 OHM,1%,0.125W,TC=10 0 PPM;1206,T&R	01121	BCD56R2FT
A10R995	321-5018-00			RES,FXD:METAL FILM;1.0K OHM,1%,0.125W,TC=10 0 PPM;1206,T&R	80009	321-5018-00
A10U120	160-7549-00	B010100	B010628	IC,DIGITAL:CMOS,131072 X 8 EPROM;250NS,27C0 10,DIP32.6	80009	160-7549-00
A10U120	160-7552-01	B010629	B011263	IC,DIGITAL:CMOS,EPROM;131072 X 8,PRGM 156-3 621-00,250NS,27C010,DIP32.6	80009	160-7552-01
A10U120	160-8928-00	B011264		IC,DIGITAL:CMOS,EPROM;131072 X 8 PRGM 156-3 267-00,250NS,27C010,DIP32.6	80009	160-8928-00
A10U130	156-5286-00			IC,MEMORY:CMOS,SRAM;32K X 8,120NS,50UA,OE;4 3256,SO28M.330,TUBE	80009	156-5286-00
A10U170	156-5269-00			IC,DIGITAL:ECL,RECEIVER;TRIPLE LINE;10H116, PLCC20,TUBE	80009	156-5269-00
A10U175	156-5269-00			IC,DIGITAL:ECL,RECEIVER;TRIPLE LINE;10H116, PLCC20,TUBE	80009	156-5269-00
A10U185	156-5269-00			IC,DIGITAL:ECL,RECEIVER;TRIPLE LINE;10H116, PLCC20,TUBE	80009	156-5269-00
A10U195	156-5221-00			IC,DIGITAL:ECL,FLIP FLOP;DUAL D-TYPE;10H131 ,PLCC20,TUBE	80009	156-5221-00
A10U220	160-7550-00	B010100	B010628	IC,DIGITAL:CMOS,131072 X 8 EPROM;250NS,27C0 10,DIP32.6	80009	160-7550-00
A10U220	160-7550-01	B010629	B011263	IC,DIGITAL:CMOS,EPROM;131072 X 8,PRGM 156-3 267-00,250NS,27C010,DIP32.6	80009	160-7550-01
A10U220	160-8927-00	B011264		IC,DIGITAL:CMOS,EPROM;131072 X 8 PRGM 156-3 267-00,250NS,27C010,DIP32.6	80009	160-8927-00
A10U230	156-5286-00			IC,MEMORY:CMOS,SRAM;32K X 8,120NS,50UA,OE;4 3256,SO28M.330,TUBE	80009	156-5286-00
A10U240	156-5144-00			IC,DIGITAL:HCTCMOS,FLIP FLOP;QUAD D-TYPE, C LEAR;74HCT175,SO16.150,TUBE	80009	156-5144-00
A10U245	156-5146-00			IC,DIGITAL:HCTCMOS,GATE;QUAD 2-INPUT AND;74 HCT08,SO14.150,TUBE	80009	156-5146-00
A10U250	156-5301-00			IC,PROCESSOR:CMOS,MICROPROCESSOR;16-BIT,8 M HZ;70108L,PLCC44	80009	156-5301-00
A10U260	156-5145-00			IC,DIGITAL:HCTCMOS,FLIP FLOP;DUAL D-TYPE;74 HCT74,SO14.150,TUBE	80009	156-5145-00
A10U270	156-5239-00			IC,DIGITAL:HCTCMOS,BUFFER;OCTAL INV, BUFFER /DRIVER, 3-STATE;74HCT240,SO20.300,TUBE	80009	156-5239-00
A10U280	156-5070-00			IC,DIGITAL:HCTCMOS,BUFFER;OCTAL BUFFER/DRIV ER, 3-STATE;74HCT244,SO20.300,TUBE	80009	156-5070-00
A10U290	156-5285-00			IC,DIGITAL:FTTL,COUNTER;SYNCH 4-BIT UP/DOWN BINARY, WITH SEPARATE CP;74F193,SO16.150,T UBE	80009	156-5285-00
A10U294	156-5268-00			IC,DIGITAL:FTTL,SCHMITT TRIG;HEX INV;74F14, SO14.150,TUBE	80009	156-5268-00
A10U295	156-5285-00			IC,DIGITAL:FTTL,COUNTER;SYNCH 4-BIT UP/DOWN BINARY, WITH SEPARATE CP;74F193,SO16.150,T UBE	80009	156-5285-00
A10U320	160-7551-00	B010100	B010628	IC,DIGITAL:CMOS,131072 X 8 EPROM;250NS,27C0 10,DIP32.6	80009	160-7551-00
A10U320	160-7550-01	B010629	B011263	IC,DIGITAL:CMOS,EPROM;131072 X 8,PRGM 156-3 267-00,250NS,27C010,DIP32.6	80009	160-7550-01
A10U320	160-8926-00	B011264		IC,DIGITAL:CMOS,EPROM;131072 X 8 PRGM 156-3 267-00,250NS,27C010,DIP32.6	80009	160-8926-00
A10U330	156-5286-00			IC,MEMORY:CMOS,SRAM;32K X 8,120NS,50UA,OE;4 3256,SO28M.330,TUBE	80009	156-5286-00
A10U340	156-5093-00			IC,PROCESSOR:CMOS,PERIPHERAL;PROGRAMMABLE I NTERRUPT CONTROLLER, 5MHZ;82C59A-5,PLCC28	80009	156-5093-00
A10U360	156-5302-00			IC,DIGITAL:CMOS,MISC;CLOCK GENERATOR/DRIVER ,8MHZ;71011,SO20M.200,TUBE,SMD	80009	156-5302-00

Component No.	Tektronix Part No.	Serial/Assembly No. Effective	Dscont	Name & Description	Mfr. Code	Mfr. Part No.
A10U365	156-5085-00			IC,DIGITAL:HCTCMOS,GATE;QUAD 2-INPUT OR;74HCT32,SO14.150,TUBE	80009	156-5085-00
A10U370	156-5284-00			IC,DIGITAL:LSTTL,COUNTER;8-BIT BINARY, WITH INPUT REGISTER, 3-STATE;74LS593,SO20.300,TUBE	80009	156-5284-00
A10U380	156-5284-00			IC,DIGITAL:LSTTL,COUNTER;8-BIT BINARY, WITH INPUT REGISTER, 3-STATE;74LS593,SO20.300,TUBE	80009	156-5284-00
A10U385	156-5101-01			IC,DIGITAL:HCTCMOS,LATCH;OCTAL D-TYPE, 3-STATE;74HCT373,SO20.300,24MM T&R	80009	156-5101-01
A10U395	156-5220-01			IC,DIGITAL:HCTCMOS,BUFFER;OCTAL BUFFER/DRIVER, 3-STATE;74HCT541,SO20.300,24MM T&R	80009	156-5220-01
A10U420	160-7552-00	B010100	B010628	IC,DIGITAL:CMOS,EPROM;131072 X 8 PRGM 156-3267-00,250NS,27C010,DIP32.6	80009	160-7552-00
A10U420	160-7549-01	B010629	B011263	IC,DIGITAL:CMOS,EPROM;131072 X 8,PRGM 156-3267-00,250NS,27C010,DIP32.6	80009	160-7549-01
A10U420	160-8925-00	B011264		IC,DIGITAL:CMOS,EPROM;131072 X 8 PRGM 156-3267-00,250NS,27C010,DIP32.6	80009	160-8925-00
A10U430	156-5286-00			IC,MEMORY:CMOS,SRAM;32K X 8,120NS,50UA,OE;43256,SO28M.330,TUBE	80009	156-5286-00
A10U440	156-5101-01			IC,DIGITAL:HCTCMOS,LATCH;OCTAL D-TYPE, 3-STATE;74HCT373,SO20.300,24MM T&R	80009	156-5101-01
A10U450	156-5101-01			IC,DIGITAL:HCTCMOS,LATCH;OCTAL D-TYPE, 3-STATE;74HCT373,SO20.300,24MM T&R	80009	156-5101-01
A10U460	156-5071-00			IC,DIGITAL:HCTCMOS,TRANSCEIVER;OCTAL, 3-STATE;74HCT245,SO20.300,TUBE	80009	156-5071-00
A10U465	156-5101-01			IC,DIGITAL:HCTCMOS,LATCH;OCTAL D-TYPE, 3-STATE;74HCT373,SO20.300,24MM T&R	80009	156-5101-01
A10U470	156-5092-00			IC,PROCESSOR:CMOS,PERIPHERAL;PROGRAMMABLE INTERVAL TIMER, 8MHZ;82C54,PLCC28	80009	156-5092-00
A10U480	156-5284-00			IC,DIGITAL:LSTTL,COUNTER;8-BIT BINARY, WITH INPUT REGISTER, 3-STATE;74LS593,SO20.300,TUBE	80009	156-5284-00
A10U485	156-5070-00			IC,DIGITAL:HCTCMOS,BUFFER;OCTAL BUFFER/DRIVER, 3-STATE;74HCT244,SO20.300,TUBE	80009	156-5070-00
A10U495	156-5101-01			IC,DIGITAL:HCTCMOS,LATCH;OCTAL D-TYPE, 3-STATE;74HCT373,SO20.300,24MM T&R	80009	156-5101-01
A10U515	160-5430-00			MICROCKT,DGTL:STTL,ADDRESS DECODER,PRGM	80009	160-5430-00
A10U530	160-5431-00			MICROCKT,DGTL:STTL,ADDRESS DECODER,PRGM	80009	160-5431-00
A10U540	156-5220-01			IC,DIGITAL:HCTCMOS,BUFFER;OCTAL BUFFER/DRIVER, 3-STATE;74HCT541,SO20.300,24MM T&R	80009	156-5220-01
A10U550	156-5220-01			IC,DIGITAL:HCTCMOS,BUFFER;OCTAL BUFFER/DRIVER, 3-STATE;74HCT541,SO20.300,24MM T&R	80009	156-5220-01
A10U560	156-5071-00			IC,DIGITAL:HCTCMOS,TRANSCEIVER;OCTAL, 3-STATE;74HCT245,SO20.300,TUBE	80009	156-5071-00
A10U565	156-5070-00			IC,DIGITAL:HCTCMOS,BUFFER;OCTAL BUFFER/DRIVER, 3-STATE;74HCT244,SO20.300,TUBE	80009	156-5070-00
A10U570	156-5071-00			IC,DIGITAL:HCTCMOS,TRANSCEIVER;OCTAL, 3-STATE;74HCT245,SO20.300,TUBE	80009	156-5071-00
A10U580	156-5092-00			IC,PROCESSOR:CMOS,PERIPHERAL;PROGRAMMABLE INTERVAL TIMER, 8MHZ;82C54,PLCC28	80009	156-5092-00
A10U585	156-5123-00			IC,DIGITAL:HCTCMOS,DEMUX/DECODER;4-TO-16 DECODER;74HCT154,SO24.300,TUBE	80009	156-5123-00
A10U595	156-5220-01			IC,DIGITAL:HCTCMOS,BUFFER;OCTAL BUFFER/DRIVER, 3-STATE;74HCT541,SO20.300,24MM T&R	80009	156-5220-01
A10W518	321-5051-00			RES,FXD:METAL FILM;0 OHM,1%,0.125W,TC=100 PPM;1206,T&R	80009	321-5051-00
A10W525	321-5051-00			RES,FXD:METAL FILM;0 OHM,1%,0.125W,TC=100 PPM;1206,T&R	80009	321-5051-00

Component No.	Tektronix Part No.	Serial/Assembly No. Effective	Dscont	Name & Description	Mfr. Code	Mfr. Part No.
A10W526	321-5051-00			RES,FXD:METAL FILM;0 OHM,1%,0.125W,TC=100 PPM;1206,T&R	80009	321-5051-00
A10W577	321-5018-00			RES,FXD:METAL FILM;1.0K OHM,1%,0.125W,TC=100 PPM;1206,T&R	80009	321-5018-00
A10W578	321-5018-00			RES,FXD:METAL FILM;1.0K OHM,1%,0.125W,TC=100 PPM;1206,T&R	80009	321-5018-00
A10Y350	158-0390-00			XTAL UNIT,QTZ:14.745600 MHZ,+/-0.005%,PARALLEL,CL=20 PF, ESR=25 OHMSHC-18/U PKG	80009	158-0390-00
A11	671-1858-01			CIRCUIT BD ASSY:RS232 (OPTION 08 ONLY)	80009	671-1858-01
A11BT600	146-0044-00			BATTERY,DRY:3V,0.17AH @ 0.85MA,BUTTON CELL, LITHIUM-MANGANESE DIOXIDE	00681	ORDER BY DESCR
A11C110	283-5004-00			CAP,FXD,CER DI:0.1UF,10%,25V	80009	283-5004-00
A11C120	283-5004-00			CAP,FXD,CER DI:0.1UF,10%,25V	80009	283-5004-00
A11C200	283-5004-00			CAP,FXD,CER DI:0.1UF,10%,25V	80009	283-5004-00
A11C220	283-5004-00			CAP,FXD,CER DI:0.1UF,10%,25V	80009	283-5004-00
A11C250	283-5004-00			CAP,FXD,CER DI:0.1UF,10%,25V	80009	283-5004-00
A11C290	283-5004-00			CAP,FXD,CER DI:0.1UF,10%,25V	80009	283-5004-00
A11C310	283-5004-00			CAP,FXD,CER DI:0.1UF,10%,25V	80009	283-5004-00
A11C320	283-5004-00			CAP,FXD,CER DI:0.1UF,10%,25V	80009	283-5004-00
A11C330	283-5004-00			CAP,FXD,CER DI:0.1UF,10%,25V	80009	283-5004-00
A11C340	283-5004-00			CAP,FXD,CER DI:0.1UF,10%,25V	80009	283-5004-00
A11C350	283-5004-00			CAP,FXD,CER DI:0.1UF,10%,25V	80009	283-5004-00
A11C360	283-5004-00			CAP,FXD,CER DI:0.1UF,10%,25V	80009	283-5004-00
A11C361	283-5004-00			CAP,FXD,CER DI:0.1UF,10%,25V	80009	283-5004-00
A11C420	283-5004-00			CAP,FXD,CER DI:0.1UF,10%,25V	80009	283-5004-00
A11C430	283-5004-00			CAP,FXD,CER DI:0.1UF,10%,25V	80009	283-5004-00
A11C440	283-5004-00			CAP,FXD,CER DI:0.1UF,10%,25V	80009	283-5004-00
A11C450	283-5004-00			CAP,FXD,CER DI:0.1UF,10%,25V	80009	283-5004-00
A11C460	283-5004-00			CAP,FXD,CER DI:0.1UF,10%,25V	80009	283-5004-00
A11C480	283-5004-00			CAP,FXD,CER DI:0.1UF,10%,25V	80009	283-5004-00
A11C513	283-5001-00			CAP,FXD,CER DI:100PF,5%,50V	80009	283-5001-00
A11C710	290-0944-00			CAP,FXD,ELCTLT:220UF,+50-20%,10V	55680	UVX1C221MPA
A11C860	290-0944-00			CAP,FXD,ELCTLT:220UF,+50-20%,10V	55680	UVX1C221MPA
A11C920	290-0944-00			CAP,FXD,ELCTLT:220UF,+50-20%,10V	55680	UVX1C221MPA
A11C990	290-0944-00			CAP,FXD,ELCTLT:220UF,+50-20%,10V	55680	UVX1C221MPA
A11CR110	152-0457-00			SEMICOND DVC,DI:SW,SI,25V,DO-35	28480	5082-2068
A11J140	131-2920-00			CONN,HDR:PCB,;MALE,RTANG,2 X 5,0.1 CTR,0.318 MLG X 0.110 TAIL,0.238 H,30 GOLD;,,	80009	131-2920-00
A11J150	131-2920-00			CONN,HDR:PCB,;MALE,RTANG,2 X 5,0.1 CTR,0.318 MLG X 0.110 TAIL,0.238 H,30 GOLD;,,	80009	131-2920-00
A11J340	131-1857-00			CONN,HDR:PCB,;MALE,STR,1 X 36,0.1 CTR,0.230 MLG X 0.100 TAIL,GOLD;,,	58050	082-3644-SS10
A11J500	131-1857-00			CONN,HDR:PCB,;MALE,STR,1 X 36,0.1 CTR,0.230 MLG X 0.100 TAIL,GOLD;,,	58050	082-3644-SS10
A11J501	131-1857-00			CONN,HDR:PCB,;MALE,STR,1 X 36,0.1 CTR,0.230 MLG X 0.100 TAIL,GOLD;,,	58050	082-3644-SS10
A11J510	131-1857-00			CONN,HDR:PCB,;MALE,STR,1 X 36,0.1 CTR,0.230 MLG X 0.100 TAIL,GOLD;,,	58050	082-3644-SS10
A11J511	131-1857-00			CONN,HDR:PCB,;MALE,STR,1 X 36,0.1 CTR,0.230 MLG X 0.100 TAIL,GOLD;,,	58050	082-3644-SS10
A11J550	131-2221-00			CONN,HDR:PCB;,MALE,RTANG,2 X 25,0.1 CTR,0.318 MLG X 0.110 TAIL,30 GOLD;,,	22526	65626-150
A11P8	131-3556-00			CONN,RCPT,ELEC:CARD CONN,2 X 12,HORIZ	22526	66527-012
A11P500	131-3199-00			BUS,CONDUCTOR:SHUNT,;FEMALE,1 X 2,0.1 CTR,0.200 H,LOW PROFILE,JUMPER;,,	22526	76264-101
A11Q211	151-5001-00			TRANSISTOR,SIG:BIPOLAR,NPN;40V,200MA,300MHZ,AMPLIFIER;MMBT3904L,TO-236/SOT-23,8MM T&R	80009	151-5001-00

Component No.	Tektronix Part No.	Serial/Assembly No. Effective	Dscont	Name & Description	Mfr. Code	Mfr. Part No.
A11Q510	151-5001-00			TRANSISTOR,SIG:BIPOLAR,NPN;40V,200MA,300MHZ ,AMPLIFIER;MMBT3904L,TO-236/SOT-23,8MM T&R	80009	151-5001-00
A11R211	321-5030-00			RES,FXD:METAL FILM;10.0K OHM,1%,0.125W,TC=1 00 PPM;1206,T&R	80009	321-5030-00
A11R212	321-5030-00			RES,FXD:METAL FILM;10.0K OHM,1%,0.125W,TC=1 00 PPM;1206,T&R	80009	321-5030-00
A11R280	321-5030-00			RES,FXD:METAL FILM;10.0K OHM,1%,0.125W,TC=1 00 PPM;1206,T&R	80009	321-5030-00
A11R300	321-5030-00			RES,FXD:METAL FILM;10.0K OHM,1%,0.125W,TC=1 00 PPM;1206,T&R	80009	321-5030-00
A11R340	321-5026-00			RES,FXD:METAL FILM;4.75K OHM,1%,0.125W,TC=1 00 PPM;1206,T&R	80009	321-5026-00
A11R361	321-5047-00			RES,FXD:METAL FILM;100K OHM,1%,0.125W,TC=10 0 PPM;1206,T&R	80009	321-5047-00
A11R362	321-5047-00			RES,FXD:METAL FILM;100K OHM,1%,0.125W,TC=10 0 PPM;1206,T&R	80009	321-5047-00
A11R363	321-5047-00			RES,FXD:METAL FILM;100K OHM,1%,0.125W,TC=10 0 PPM;1206,T&R	80009	321-5047-00
A11R380	321-5030-00			RES,FXD:METAL FILM;10.0K OHM,1%,0.125W,TC=1 00 PPM;1206,T&R	80009	321-5030-00
A11R381	321-5030-00			RES,FXD:METAL FILM;10.0K OHM,1%,0.125W,TC=1 00 PPM;1206,T&R	80009	321-5030-00
A11R450	321-5047-00			RES,FXD:METAL FILM;100K OHM,1%,0.125W,TC=10 0 PPM;1206,T&R	80009	321-5047-00
A11R451	321-5030-00			RES,FXD:METAL FILM;10.0K OHM,1%,0.125W,TC=1 00 PPM;1206,T&R	80009	321-5030-00
A11R452	321-5030-00			RES,FXD:METAL FILM;10.0K OHM,1%,0.125W,TC=1 00 PPM;1206,T&R	80009	321-5030-00
A11R453	321-5030-00			RES,FXD:METAL FILM;10.0K OHM,1%,0.125W,TC=1 00 PPM;1206,T&R	80009	321-5030-00
A11R480	321-5030-00			RES,FXD:METAL FILM;10.0K OHM,1%,0.125W,TC=1 00 PPM;1206,T&R	80009	321-5030-00
A11R510	321-5018-00			RES,FXD:METAL FILM;1.0K OHM,1%,0.125W,TC=10 0 PPM;1206,T&R	80009	321-5018-00
A11R511	321-5030-00			RES,FXD:METAL FILM;10.0K OHM,1%,0.125W,TC=1 00 PPM;1206,T&R	80009	321-5030-00
A11R512	321-5030-00			RES,FXD:METAL FILM;10.0K OHM,1%,0.125W,TC=1 00 PPM;1206,T&R	80009	321-5030-00
A11R514	321-5026-00			RES,FXD:METAL FILM;4.75K OHM,1%,0.125W,TC=1 00 PPM;1206,T&R	80009	321-5026-00
A11U110	156-2760-00			IC,DIGITAL:CMOS,MISC;NONVOLATILE CONTROLLER CHIP;DS1210,DIP8.3,TUBE	0B0A9	DS1210
A11U130	156-2463-00			IC,DIGITAL:HCMOS,GATE;QUAD 2-INPUT OR;74HC3 2,DIP14.3	18324	74HC32N
A11U200	156-3629-00			IC,PROCESSOR:CMOS,PERIPHERAL;RTC, CLOCK CAL ENDAR;62X42,DIP18.3	80009	156-3629-00
A11U210	156-5155-00			IC,DIGITAL:HCMOS,GATE;HEX INV;74HC04,SO14.1 50,TUBE	80009	156-5155-00
A11U220	156-5286-00			IC,MEMORY:CMOS,SRAM;32K X 8,120NS,50UA,OE;4 3256,SO28M.330,TUBE	80009	156-5286-00
A11U250	156-5101-01			IC,DIGITAL:HCTCMOS,LATCH;OCTAL D-TYPE, 3-ST ATE;74HCT373,SO20.300,24MM T&R	80009	156-5101-01
A11U280	156-3456-00			IC,MISC:	80009	156-3456-00
A11U311	160-5433-00			MICROCKT,DGTL:STTL,PLD,FPLS,PRGM	80009	160-5433-00
A11U312	160-7548-00	B010100	B010628	IC,DIGITAL:CMOS,131072 X 8 EPROM;250NS,27C0 10,DIP32.6	80009	160-7548-00
A11U312	160-7548-01	B010629		IC,DIGITAL:CMOS,EPROM;131072 X 8,PRGM 156-3 267-00,250NS,27C010,DIP32.6	80009	160-7548-01

Component No.	Tektronix Part No.	Serial/Assembly No. Effective	Dscont	Name & Description	Mfr. Code	Mfr. Part No.
A11U320	156-5286-00			IC,MEMORY:CMOS,SRAM;32K X 8,120NS,50UA,OE;43256,SO28M.330,TUBE	80009	156-5286-00
A11U330	160-5329-00			MICROCKT,DGTL:STTL.PLD,FPLA,PRGM	80009	160-5329-00
A11U340	160-5328-00			IC,DIGITAL:STTL.PLD;FPLA,PLS173,30NS,170MA,PRGM 156-5283-00;PLS173A,PLCC28-1	80009	160-5328-00
A11U350	156-5220-01			IC,DIGITAL:HCTCMOS,BUFFER;OCTAL BUFFER/DRIVER, 3-STATE;74HCT541,SO20.300,24MM T&R	80009	156-5220-01
A11U360	156-5146-00			IC,DIGITAL:HCTCMOS,GATE;QUAD 2-INPUT AND;74HCT08,SO14.150,TUBE	80009	156-5146-00
A11U361	156-5081-01			IC,DIGITAL:HCTMOS,GATE;HEX INVERTER;74HCT04,SO14.150,16MM T&R	80009	156-5081-01
A11U380	156-5527-00			IC,PROCESSOR:CMOS,PERIPHERAL;SCC, SERIAL COMMUNICATION CONTROLLER, 8MHZ;85C30,PLCC44	80009	156-5527-00
A11U410	160-7547-00	B010100	B010628	IC,DIGITAL:CMOS,131072 X 8 EPROM;250NS,27C010,DIP32.6	80009	160-7547-00
A11U410	160-7547-01	B010629		IC,DIGITAL:CMOS,EPROM;131072 X 8,PRGM 156-3267-00,250NS,27C010,DIP32.6	80009	160-7547-01
A11U420	156-5286-00			IC,MEMORY:CMOS,SRAM;32K X 8,120NS,50UA,OE;43256,SO28M.330,TUBE	80009	156-5286-00
A11U430	156-5220-01			IC,DIGITAL:HCTCMOS,BUFFER;OCTAL BUFFER/DRIVER, 3-STATE;74HCT541,SO20.300,24MM T&R	80009	156-5220-01
A11U440	156-5220-01			IC,DIGITAL:HCTCMOS,BUFFER;OCTAL BUFFER/DRIVER, 3-STATE;74HCT541,SO20.300,24MM T&R	80009	156-5220-01
A11U450	156-5071-00			IC,DIGITAL:HCTCMOS,TRANSCEIVER;OCTAL, 3-STATE;74HCT245,SO20.300,TUBE	80009	156-5071-00
A11U460	156-5220-01			IC,DIGITAL:HCTCMOS,BUFFER;OCTAL BUFFER/DRIVER, 3-STATE;74HCT541,SO20.300,24MM T&R	80009	156-5220-01
A11W501	321-5051-00			RES,FXD:METAL FILM;0 OHM,1%,0.125W,TC=100 PPM;1206,T&R	80009	321-5051-00
A12	672-1284-03	B010100	B010475	CIRCUIT BD ASSY:PHASELOCK CFC MODULE	80009	672-1284-03
A12	672-1284-04	B010476	B011147	CIRCUIT BD ASSY:PHASELOCK CFC MODULE	80009	672-1284-04
A12	672-1284-05	B011148		CIRCUIT BD ASSY:PHASELOCK CFC MODULE	80009	672-1284-05
A12C1	281-0825-00			CAP,FXD,CER DI:0.005UF,+100-0%,100V	33095	51-726-008
A12C2	281-0825-00			CAP,FXD,CER DI:0.005UF,+100-0%,100V	33095	51-726-008
A12C3	281-0825-00			CAP,FXD,CER DI:0.005UF,+100-0%,100V	33095	51-726-008
A12C4	281-0825-00			CAP,FXD,CER DI:0.005UF,+100-0%,100V	33095	51-726-008
A12C5	281-0825-00			CAP,FXD,CER DI:0.005UF,+100-0%,100V	33095	51-726-008
A12C6	281-0825-00			CAP,FXD,CER DI:0.005UF,+100-0%,100V	33095	51-726-008
A12C7	281-0825-00			CAP,FXD,CER DI:0.005UF,+100-0%,100V	33095	51-726-008
A12C8	281-0825-00			CAP,FXD,CER DI:0.005UF,+100-0%,100V	33095	51-726-008
A12C9	281-0825-00			CAP,FXD,CER DI:0.005UF,+100-0%,100V	33095	51-726-008
A12C10	281-0825-00			CAP,FXD,CER DI:0.005UF,+100-0%,100V	33095	51-726-008
A12C11	281-0825-00			CAP,FXD,CER DI:0.005UF,+100-0%,100V	33095	51-726-008
A12J100	131-1170-00			CONN,RF JACK:	80009	131-1170-00
A12J130	131-1170-00			CONN,RF JACK:	80009	131-1170-00
A12J140	131-1170-00			CONN,RF JACK:	80009	131-1170-00
A12J240	131-1170-00			CONN,RF JACK:	80009	131-1170-00
A12J540	131-1170-00			CONN,RF JACK:	80009	131-1170-00
A12R1	322-3193-00			RES,FXD:METAL FILM;1K OHM,1%,0.2W,TC=100 PPM;AXIAL,T&R,SMALL BODY	57668	CRB20 FXE 1K00
A12R2	322-3193-00			RES,FXD:METAL FILM;1K OHM,1%,0.2W,TC=100 PPM;AXIAL,T&R,SMALL BODY	57668	CRB20 FXE 1K00
A12R3	317-0101-00			RES,FXD,CMPSN:100 OHM,5%,0.125W	80009	317-0101-00
A12A1	----- -----			(PART OF A12) PHASELOCK CF CONTROL		
A12A1C100	290-5002-00			CAP,FXD,ELCTLT:10UF,20V	TK1424	20MC100M-TER
A12A1C101	290-5002-00			CAP,FXD,ELCTLT:10UF,20V	TK1424	20MC100M-TER
A12A1C112	290-5002-00			CAP,FXD,ELCTLT:10UF,20V	TK1424	20MC100M-TER
A12A1C120	290-5002-00			CAP,FXD,ELCTLT:10UF,20V	TK1424	20MC100M-TER
A12A1C141	283-5004-00			CAP,FXD,CER DI:0.1UF,10%,25V	80009	283-5004-00

Component No.	Tektronix Part No.	Serial/Assembly No. Effective	Dscont	Name & Description	Mfr. Code	Mfr. Part No.
A12A1C150	283-5004-00			CAP,FXD,CER DI:0.1UF,10%,25V	80009	283-5004-00
A12A1C163	283-5004-00			CAP,FXD,CER DI:0.1UF,10%,25V	80009	283-5004-00
A12A1C167	283-5004-00			CAP,FXD,CER DI:0.1UF,10%,25V	80009	283-5004-00
A12A1C200	283-5004-00			CAP,FXD,CER DI:0.1UF,10%,25V	80009	283-5004-00
A12A1C201	283-5004-00			CAP,FXD,CER DI:0.1UF,10%,25V	80009	283-5004-00
A12A1C205	283-5004-00			CAP,FXD,CER DI:0.1UF,10%,25V	80009	283-5004-00
A12A1C211	290-5002-00			CAP,FXD,ELCTLT:10UF,20V	TK1424	20MC100M-TER
A12A1C213	290-5002-00			CAP,FXD,ELCTLT:10UF,20V	TK1424	20MC100M-TER
A12A1C214	290-5002-00			CAP,FXD,ELCTLT:10UF,20V	TK1424	20MC100M-TER
A12A1C220	283-5025-00			CAP,FXD,CER DI:220PF,5%,50V	80009	283-5025-00
A12A1C221	290-5002-00			CAP,FXD,ELCTLT:10UF,20V	TK1424	20MC100M-TER
A12A1C230	290-5002-00			CAP,FXD,ELCTLT:10UF,20V	TK1424	20MC100M-TER
A12A1C231	290-5002-00			CAP,FXD,ELCTLT:10UF,20V	TK1424	20MC100M-TER
A12A1C235	290-5002-00			CAP,FXD,ELCTLT:10UF,20V	TK1424	20MC100M-TER
A12A1C240	290-5002-00			CAP,FXD,ELCTLT:10UF,20V	TK1424	20MC100M-TER
A12A1C245	290-5002-00			CAP,FXD,ELCTLT:10UF,20V	TK1424	20MC100M-TER
A12A1C251	283-5004-00			CAP,FXD,CER DI:0.1UF,10%,25V	80009	283-5004-00
A12A1C252	283-5004-00			CAP,FXD,CER DI:0.1UF,10%,25V	80009	283-5004-00
A12A1C255	283-5004-00			CAP,FXD,CER DI:0.1UF,10%,25V	80009	283-5004-00
A12A1C262	283-5022-00			CAP,FXD,CER DI:47PF,5%,50V	54583	
A12A1C280	290-5002-00			CAP,FXD,ELCTLT:10UF,20V	TK1424	20MC100M-TER
A12A1C281	283-5004-00			CAP,FXD,CER DI:0.1UF,10%,25V	80009	283-5004-00
A12A1C282	290-5002-00			CAP,FXD,ELCTLT:10UF,20V	TK1424	20MC100M-TER
A12A1C290	290-0963-00			CAP,FXD,ELCTLT:220UF,+50-20%,25WVDC	80009	290-0963-00
A12A1C292	290-0963-00			CAP,FXD,ELCTLT:220UF,+50-20%,25WVDC	80009	290-0963-00
A12A1C300	290-5002-00			CAP,FXD,ELCTLT:10UF,20V	TK1424	20MC100M-TER
A12A1C310	290-5002-00			CAP,FXD,ELCTLT:10UF,20V	TK1424	20MC100M-TER
A12A1C312	290-5002-00			CAP,FXD,ELCTLT:10UF,20V	TK1424	20MC100M-TER
A12A1C314	290-5002-00			CAP,FXD,ELCTLT:10UF,20V	TK1424	20MC100M-TER
A12A1C321	290-5002-00			CAP,FXD,ELCTLT:10UF,20V	TK1424	20MC100M-TER
A12A1C322	290-5002-00			CAP,FXD,ELCTLT:10UF,20V	TK1424	20MC100M-TER
A12A1C333	283-5004-00			CAP,FXD,CER DI:0.1UF,10%,25V	80009	283-5004-00
A12A1C334	283-5004-00			CAP,FXD,CER DI:0.1UF,10%,25V	80009	283-5004-00
A12A1C337	283-5004-00			CAP,FXD,CER DI:0.1UF,10%,25V	80009	283-5004-00
A12A1C338	283-5004-00			CAP,FXD,CER DI:0.1UF,10%,25V	80009	283-5004-00
A12A1C340	290-5002-00			CAP,FXD,ELCTLT:10UF,20V	TK1424	20MC100M-TER
A12A1C341	290-5002-00			CAP,FXD,ELCTLT:10UF,20V	TK1424	20MC100M-TER
A12A1C342	290-5002-00			CAP,FXD,ELCTLT:10UF,20V	TK1424	20MC100M-TER
A12A1C343	290-5002-00			CAP,FXD,ELCTLT:10UF,20V	TK1424	20MC100M-TER
A12A1C352	290-5002-00			CAP,FXD,ELCTLT:10UF,20V	TK1424	20MC100M-TER
A12A1C374	283-5014-00			CAP,FXD,CER DI:330PF,5%,50V	80009	283-5014-00
A12A1C388	290-0536-00			CAP,FXD,ELCTLT:10UF,20%,25V TANTALUM	05397	T368B106M025AS
A12A1C389	290-5002-00			CAP,FXD,ELCTLT:10UF,20V	TK1424	20MC100M-TER
A12A1C390	283-5004-00			CAP,FXD,CER DI:0.1UF,10%,25V	80009	283-5004-00
A12A1C392	290-0963-00			CAP,FXD,ELCTLT:220UF,+50-20%,25WVDC	80009	290-0963-00
A12A1C395	290-0963-00			CAP,FXD,ELCTLT:220UF,+50-20%,25WVDC	80009	290-0963-00
A12A1C410	290-5002-00			CAP,FXD,ELCTLT:10UF,20V	TK1424	20MC100M-TER
A12A1C411	290-5002-00			CAP,FXD,ELCTLT:10UF,20V	TK1424	20MC100M-TER
A12A1C420	290-5002-00			CAP,FXD,ELCTLT:10UF,20V	TK1424	20MC100M-TER
A12A1C421	290-5002-00			CAP,FXD,ELCTLT:10UF,20V	TK1424	20MC100M-TER
A12A1C422	290-5002-00			CAP,FXD,ELCTLT:10UF,20V	TK1424	20MC100M-TER
A12A1C442	290-5002-00			CAP,FXD,ELCTLT:10UF,20V	TK1424	20MC100M-TER
A12A1C443	290-5002-00			CAP,FXD,ELCTLT:10UF,20V	TK1424	20MC100M-TER
A12A1C445	290-5002-00			CAP,FXD,ELCTLT:10UF,20V	TK1424	20MC100M-TER
A12A1C452	290-5002-00			CAP,FXD,ELCTLT:10UF,20V	TK1424	20MC100M-TER
A12A1C480	290-0944-00			CAP,FXD,ELCTLT:220UF,+50-20%,10V	55680	UVX1C221MPA
A12A1C483	283-5004-00			CAP,FXD,CER DI:0.1UF,10%,25V	80009	283-5004-00
A12A1C520	290-5002-00			CAP,FXD,ELCTLT:10UF,20V	TK1424	20MC100M-TER
A12A1C540	290-5002-00			CAP,FXD,ELCTLT:10UF,20V	TK1424	20MC100M-TER

Component No.	Tektronix Part No.	Serial/Assembly No. Effective	Dscont	Name & Description	Mfr. Code	Mfr. Part No.
A12A1C562	283-5015-00			CAP,FXD,CER DI:3300PF,10%,50V	54583	
A12A1C567	283-5015-00			CAP,FXD,CER DI:3300PF,10%,50V	54583	
A12A1C605	283-5004-00			CAP,FXD,CER DI:0.1UF,10%,25V	80009	283-5004-00
A12A1C611	283-5014-00			CAP,FXD,CER DI:330PF,5%,50V	80009	283-5014-00
A12A1C612	283-5004-00			CAP,FXD,CER DI:0.1UF,10%,25V	80009	283-5004-00
A12A1C616	283-5004-00			CAP,FXD,CER DI:0.1UF,10%,25V	80009	283-5004-00
A12A1C623	283-5004-00			CAP,FXD,CER DI:0.1UF,10%,25V	80009	283-5004-00
A12A1C625	283-5004-00			CAP,FXD,CER DI:0.1UF,10%,25V	80009	283-5004-00
A12A1C630	283-5008-00			CAP,FXD,CER DI:12PF,5%,50V	54583	C3216C0G1H120J
A12A1C635	283-5004-00			CAP,FXD,CER DI:0.1UF,10%,25V	80009	283-5004-00
A12A1C660	290-5002-00			CAP,FXD,ELCTLT:10UF,20V	TK1424	20MC100M-TER
A12A1C671	290-5002-00			CAP,FXD,ELCTLT:10UF,20V	TK1424	20MC100M-TER
A12A1C672	290-5002-00			CAP,FXD,ELCTLT:10UF,20V	TK1424	20MC100M-TER
A12A1C710	283-5004-00			CAP,FXD,CER DI:0.1UF,10%,25V	80009	283-5004-00
A12A1C711	283-5001-00			CAP,FXD,CER DI:100PF,5%,50V	80009	283-5001-00
A12A1C712	283-5001-00			CAP,FXD,CER DI:100PF,5%,50V	80009	283-5001-00
A12A1C714	283-5022-00			CAP,FXD,CER DI:47PF,5%,50V	54583	
A12A1C715	283-5003-00			CAP,FXD,CER DI:0.01UF,10%,50V	80009	283-5003-00
A12A1C716	283-5004-00			CAP,FXD,CER DI:0.1UF,10%,25V	80009	283-5004-00
A12A1C721	283-5042-00			CAP,FXD,CER DI:27PF,5%,50V	80009	283-5042-00
A12A1C722	283-5014-00			CAP,FXD,CER DI:330PF,5%,50V	80009	283-5014-00
A12A1C724	283-5004-00			CAP,FXD,CER DI:0.1UF,10%,25V	80009	283-5004-00
A12A1C726	283-5004-00			CAP,FXD,CER DI:0.1UF,10%,25V	80009	283-5004-00
A12A1C728	283-5004-00			CAP,FXD,CER DI:0.1UF,10%,25V	80009	283-5004-00
A12A1C729	290-5002-00			CAP,FXD,ELCTLT:10UF,20V	TK1424	20MC100M-TER
A12A1C731	283-5022-00			CAP,FXD,CER DI:47PF,5%,50V	54583	
A12A1C733	283-5022-00			CAP,FXD,CER DI:47PF,5%,50V	54583	
A12A1C735	283-5011-00			CAP,FXD,CER DI:33PF,5%,50V	95275	VJ1206A330JXA
A12A1C737	283-5004-00			CAP,FXD,CER DI:0.1UF,10%,25V	80009	283-5004-00
A12A1C738	283-5004-00			CAP,FXD,CER DI:0.1UF,10%,25V	80009	283-5004-00
A12A1C741	283-5004-00			CAP,FXD,CER DI:0.1UF,10%,25V	80009	283-5004-00
A12A1C742	283-5004-00			CAP,FXD,CER DI:0.1UF,10%,25V	80009	283-5004-00
A12A1C744	283-5004-00			CAP,FXD,CER DI:0.1UF,10%,25V	80009	283-5004-00
A12A1C747	283-5004-00			CAP,FXD,CER DI:0.1UF,10%,25V	80009	283-5004-00
A12A1C760	283-5004-00			CAP,FXD,CER DI:0.1UF,10%,25V	80009	283-5004-00
A12A1C761	283-5004-00			CAP,FXD,CER DI:0.1UF,10%,25V	80009	283-5004-00
A12A1C770	283-5004-00			CAP,FXD,CER DI:0.1UF,10%,25V	80009	283-5004-00
A12A1C771	283-5004-00			CAP,FXD,CER DI:0.1UF,10%,25V	80009	283-5004-00
A12A1C773	283-5004-00			CAP,FXD,CER DI:0.1UF,10%,25V	80009	283-5004-00
A12A1C812	283-5001-00			CAP,FXD,CER DI:100PF,5%,50V	80009	283-5001-00
A12A1C824	283-5001-00			CAP,FXD,CER DI:100PF,5%,50V	80009	283-5001-00
A12A1C825	283-5001-00			CAP,FXD,CER DI:100PF,5%,50V	80009	283-5001-00
A12A1C826	283-5004-00			CAP,FXD,CER DI:0.1UF,10%,25V	80009	283-5004-00
A12A1C840	283-5001-00			CAP,FXD,CER DI:100PF,5%,50V	80009	283-5001-00
A12A1C851	283-5001-00			CAP,FXD,CER DI:100PF,5%,50V	80009	283-5001-00
A12A1C853	283-5001-00			CAP,FXD,CER DI:100PF,5%,50V	80009	283-5001-00
A12A1C860	283-5001-00			CAP,FXD,CER DI:100PF,5%,50V	80009	283-5001-00
A12A1C862	283-5001-00			CAP,FXD,CER DI:100PF,5%,50V	80009	283-5001-00
A12A1C864	283-5004-00			CAP,FXD,CER DI:0.1UF,10%,25V	80009	283-5004-00
A12A1C874	283-5004-00			CAP,FXD,CER DI:0.1UF,10%,25V	80009	283-5004-00
A12A1C914	283-5001-00			CAP,FXD,CER DI:100PF,5%,50V	80009	283-5001-00
A12A1C919	290-0963-00			CAP,FXD,ELCTLT:220UF,+50-20%,25WVDC	80009	290-0963-00
A12A1C920	283-5004-00			CAP,FXD,CER DI:0.1UF,10%,25V	80009	283-5004-00
A12A1C929	283-5004-00			CAP,FXD,CER DI:0.1UF,10%,25V	80009	283-5004-00
A12A1C930	283-5004-00			CAP,FXD,CER DI:0.1UF,10%,25V	80009	283-5004-00
A12A1C940	283-5001-00			CAP,FXD,CER DI:100PF,5%,50V	80009	283-5001-00
A12A1C941	283-5001-00			CAP,FXD,CER DI:100PF,5%,50V	80009	283-5001-00
A12A1C942	283-5004-00			CAP,FXD,CER DI:0.1UF,10%,25V	80009	283-5004-00
A12A1C943	283-5004-00			CAP,FXD,CER DI:0.1UF,10%,25V	80009	283-5004-00

Component No.	Tektronix Part No.	Serial/Assembly No. Effective	Dscont	Name & Description	Mfr. Code	Mfr. Part No.
A12A1C951	283-5001-00			CAP,FXD,CER DI:100PF,5%,50V	80009	283-5001-00
A12A1C953	283-5001-00			CAP,FXD,CER DI:100PF,5%,50V	80009	283-5001-00
A12A1C960	283-5004-00			CAP,FXD,CER DI:0.1UF,10%,25V	80009	283-5004-00
A12A1C961	283-5004-00			CAP,FXD,CER DI:0.1UF,10%,25V	80009	283-5004-00
A12A1C962	290-5002-00			CAP,FXD,ELCTLT:10UF,20V	TK1424	20MC100M-TER
A12A1C963	290-5002-00			CAP,FXD,ELCTLT:10UF,20V	TK1424	20MC100M-TER
A12A1C971	283-5014-00			CAP,FXD,CER DI:330PF,5%,50V	80009	283-5014-00
A12A1C973	283-5004-00			CAP,FXD,CER DI:0.1UF,10%,25V	80009	283-5004-00
A12A1C974	290-0963-00			CAP,FXD,ELCTLT:220UF,+50-20%,25WVDC	80009	290-0963-00
A12A1C975	283-5004-00			CAP,FXD,CER DI:0.1UF,10%,25V	80009	283-5004-00
A12A1C976	290-0963-00			CAP,FXD,ELCTLT:220UF,+50-20%,25WVDC	80009	290-0963-00
A12A1C980	290-0963-00			CAP,FXD,ELCTLT:220UF,+50-20%,25WVDC	80009	290-0963-00
A12A1C990	290-0963-00			CAP,FXD,ELCTLT:220UF,+50-20%,25WVDC	80009	290-0963-00
A12A1CR165	152-5004-00			DIODE,SIG:,ULTRA FAST;70V,0.15A,6NS,SER-PAI R;BAV99,SOT-23,8MM TR	25088	BAV99T
A12A1CR175	152-5000-00			SEMICOND DVC,DI:SW,SI,70V,COM CATHODE	80009	152-5000-00
A12A1CR639	152-0842-00			DIODE,SIG:SCHTKY,;COM-ANODE,20V,410MV,1.3PF ;HSMS-2812,SOT-23,T&R	04713	SRV-V-017
A12A1CR840	152-5004-00			DIODE,SIG:,ULTRA FAST;70V,0.15A,6NS,SER-PAI R;BAV99,SOT-23,8MM TR	25088	BAV99T
A12A1CR841	152-5004-00			DIODE,SIG:,ULTRA FAST;70V,0.15A,6NS,SER-PAI R;BAV99,SOT-23,8MM TR	25088	BAV99T
A12A1J110	131-0391-01			CONN,RF JACK:	80009	131-0391-01
A12A1J130	131-0391-01			CONN,RF JACK:	80009	131-0391-01
A12A1J140	131-0391-01			CONN,RF JACK:	80009	131-0391-01
A12A1J190	131-1425-00			CONN,HDR:PCB,;MALE,RTANG,1 X 36,0.1 CTR,0.2 30 MLG X 0.090 TAIL,30 GOLD,STACKABLE;,, (REPLACE AS SET WITH 131-1426-00)	22526	65521-136
A12A1J190	131-1426-00			CONN,HDR:PCB,;MALE,RTANG,1 X 36,0.1 CTR,0.2 3 MLG X 0.195 TAIL,GOLD,STACKABLE;,, (REPLACE AS SET WITH 131-1425-00)	22526	65524-136
A12A1J510	131-3774-00			CONN,HDR:PCB,;MALE,STR,2 X 36,0.1 CTR,0.230 MLG X 0.095 TAIL,30 GOLD;,,	22526	65610-172
A12A1J550	131-1857-00			CONN,HDR:PCB,;MALE,STR,1 X 36,0.1 CTR,0.230 MLG X 0.100 TAIL,GOLD;,,	58050	082-3644-SS10
A12A1L351	108-5009-00			COIL,RF:FXD,82UH, +/- 10 %, Q=50, SRF 10 MH Z, DCR 7.0 OHM	80009	108-5009-00
A12A1L451	108-5009-00			COIL,RF:FXD,82UH, +/- 10 %, Q=50, SRF 10 MH Z, DCR 7.0 OHM	80009	108-5009-00
A12A1L481	108-1420-00			COIL,RF:FXD, 300 UH, +/- 20 %, Q 100, DCR 0 .17 OHM, POT CORE	80009	108-1420-00
A12A1L490	108-1420-00			COIL,RF:FXD, 300 UH, +/- 20 %, Q 100, DCR 0 .17 OHM, POT CORE	80009	108-1420-00
A12A1L621	108-5021-00			COIL,RF:	80009	108-5021-00
A12A1L631	108-5023-00			COIL,RF:FXD,5.6UH,20%,Q=50, SRF 40 MHZ, DCR 1.1 OHM, I MAX	54583	NL453232T-5R6M
A12A1L720	108-5000-00			COIL,RF:	80009	108-5000-00
A12A1L732	108-5093-00			COIL,RF:	02113	1812LS-222 XKBA
A12A1L802	108-5009-00			COIL,RF:FXD,82UH, +/- 10 %, Q=50, SRF 10 MH Z, DCR 7.0 OHM	80009	108-5009-00
A12A1L814	108-5009-00			COIL,RF:FXD,82UH, +/- 10 %, Q=50, SRF 10 MH Z, DCR 7.0 OHM	80009	108-5009-00
A12A1L917	108-1262-00			COIL,RF:FXD,100UH,10%,Q=30,SRF 8.2MHZ,DCR 0 .23 OHM,I MAX 0.75ARADIAL LEAD	80009	108-1262-00
A12A1P11	131-3556-00			CONN,RCPT,ELEC:CARD CONN,2 X 12,HORIZ	22526	66527-012
A12A1Q170	151-5005-00			TRANSISTOR,SIG:BIPOLAR,PNP;20V,1.0A,60MHZ,A MPLIFIER;BCX69/BC869,SOT-89,12MM T/R	04713	BCX69T1
A12A1Q521	151-1127-00			TRANSISTOR,PWR:MOS,N-CH;60V,4.0A,0.6 OHM;IR F511,TO-220	81483	IRF511

Component No.	Tektronix Part No.	Serial/Assembly No. Effective	Dscont	Name & Description	Mfr. Code	Mfr. Part No.
A12A1Q630	151-5000-00			TRANSISTOR,SIG:BIPOLAR,PNP;40V,200MA,250MHZ ,AMPLIFIER;MMBT3906L,TO-236/SOT-23,8MM T&R	04713	MMBT3906LT1
A12A1Q631	151-5001-00			TRANSISTOR,SIG:BIPOLAR,NPN;40V,200MA,300MHZ ,AMPLIFIER;MMBT3904L,TO-236/SOT-23,8MM T&R	80009	151-5001-00
A12A1Q632	151-5000-00			TRANSISTOR,SIG:BIPOLAR,PNP;40V,200MA,250MHZ ,AMPLIFIER;MMBT3906L,TO-236/SOT-23,8MM T&R	04713	MMBT3906LT1
A12A1Q633	151-5001-00			TRANSISTOR,SIG:BIPOLAR,NPN;40V,200MA,300MHZ ,AMPLIFIER;MMBT3904L,TO-236/SOT-23,8MM T&R	80009	151-5001-00
A12A1Q652	151-5001-00			TRANSISTOR,SIG:BIPOLAR,NPN;40V,200MA,300MHZ ,AMPLIFIER;MMBT3904L,TO-236/SOT-23,8MM T&R	80009	151-5001-00
A12A1Q674	151-5001-00			TRANSISTOR,SIG:BIPOLAR,NPN;40V,200MA,300MHZ ,AMPLIFIER;MMBT3904L,TO-236/SOT-23,8MM T&R	80009	151-5001-00
A12A1Q703	151-5001-00			TRANSISTOR,SIG:BIPOLAR,NPN;40V,200MA,300MHZ ,AMPLIFIER;MMBT3904L,TO-236/SOT-23,8MM T&R	80009	151-5001-00
A12A1Q780	151-1127-00			TRANSISTOR,PWR:MOS,N-CH;60V,4.0A,0.6 OHM;IR F511,TO-220	81483	IRF511
A12A1Q781	151-1128-00			TRANSISTOR,PWR:MOS,P-CH;60V,6.0A,0.6 OHM;IR F9521,TO-220	80009	151-1128-00
A12A1Q800	151-5000-00			TRANSISTOR,SIG:BIPOLAR,PNP;40V,200MA,250MHZ ,AMPLIFIER;MMBT3906L,TO-236/SOT-23,8MM T&R	04713	MMBT3906LT1
A12A1Q880	151-1128-00			TRANSISTOR,PWR:MOS,P-CH;60V,6.0A,0.6 OHM;IR F9521,TO-220	80009	151-1128-00
A12A1Q881	151-1127-00			TRANSISTOR,PWR:MOS,N-CH;60V,4.0A,0.6 OHM;IR F511,TO-220	81483	IRF511
A12A1Q910	151-1063-00			TRANSISTOR,PWR:MOS,N-CH;60V,0.8A,0.8 OHM;IR FD113,DIP04.3	80009	151-1063-00
A12A1Q911	151-1063-00			TRANSISTOR,PWR:MOS,N-CH;60V,0.8A,0.8 OHM;IR FD113,DIP04.3	80009	151-1063-00
A12A1Q920	151-1121-00			TRANSISTOR,PWR:MOS,N-CH;60V,0.5A,3.0 OHM;VN 0106N3/VN0606L,TO-92 SGD	TK0768	VN0106N3
A12A1Q930	151-5001-00			TRANSISTOR,SIG:BIPOLAR,NPN;40V,200MA,300MHZ ,AMPLIFIER;MMBT3904L,TO-236/SOT-23,8MM T&R	80009	151-5001-00
A12A1Q931	151-5000-00			TRANSISTOR,SIG:BIPOLAR,PNP;40V,200MA,250MHZ ,AMPLIFIER;MMBT3906L,TO-236/SOT-23,8MM T&R	04713	MMBT3906LT1
A12A1R111	321-5015-00			RES,FXD:METAL FILM;562 OHM,1%,0.125W,TC=100 PPM;1206,T&R	80009	321-5015-00
A12A1R161	325-0315-00			RES,FXD,FILM:20K OHM,0.05%,0.3W	07088	K747 20KOHM .05%
A12A1R162	325-0411-00			RES,FXD,FILM:15.6K OHM,1%,0.3W,TC=3.1PPM	18612	S102C 15K600-1%
A12A1R164	321-5026-00			RES,FXD:METAL FILM;4.75K OHM,1%,0.125W,TC=1 00 PPM;1206,T&R	80009	321-5026-00
A12A1R171	321-0161-00			RES,FXD,FILM:464 OHM,1%,0.125W,TC=T0	07716	CEAD464R0F
A12A1R172	321-0816-07			RES,FXD,FILM:5K OHM,0.1%,0.125W,TC=T9	80009	321-0816-07
A12A1R173	321-0289-07			RES,FXD,FILM:10.0K OHM,0.1%,0.125W,TC=T9	80009	321-0289-07
A12A1R191	321-5018-00			RES,FXD:METAL FILM;1.0K OHM,1%,0.125W,TC=10 0 PPM;1206,T&R	80009	321-5018-00
A12A1R202	321-5016-00			RES,FXD:METAL FILM;681 OHM,1%,0.125W,TC=100 PPM;1206,T&R	01121	BCK6810FT
A12A1R203	321-5010-00			RES,FXD:METAL FILM;221 OHM,1%,0.125W,TC=100 PPM;1206,T&R	80009	321-5010-00
A12A1R204	321-5016-00			RES,FXD:METAL FILM;681 OHM,1%,0.125W,TC=100 PPM;1206,T&R	01121	BCK6810FT
A12A1R210	321-5000-00			RES,FXD:METAL FILM;10 OHM,1%,0.125W,TC=100 PPM;1206,T&R	57668	MCR18EZHFW10E
A12A1R212	321-5000-00			RES,FXD:METAL FILM;10 OHM,1%,0.125W,TC=100 PPM;1206,T&R	57668	MCR18EZHFW10E
A12A1R232	321-5006-00			RES,FXD:METAL FILM;100 OHM,1%,0.125W,TC=100 PPM;1206,T&R	80009	321-5006-00
A12A1R233	321-5006-00			RES,FXD:METAL FILM;100 OHM,1%,0.125W,TC=100 PPM;1206,T&R	80009	321-5006-00

Component No.	Tektronix Part No.	Serial/Assembly No. Effective	Dscont	Name & Description	Mfr. Code	Mfr. Part No.
A12A1R234	321-5018-00			RES,FXD:METAL FILM;1.0K OHM,1%,0.125W,TC=100 PPM;1206,T&R	80009	321-5018-00
A12A1R236	321-0239-07			RES,FXD,FILM:3.01K OHM,0.1%,0.125W,TC=T9MI	07716	CEAE30100B
A12A1R237	321-0272-07			RES,FXD,FILM:6.65K OHM,0.1%,0.125W,TC=T9	07716	CEAE66500B
A12A1R238	321-0228-09			RES,FXD,FILM:2.32K OHM,1%,0.125W,TC=T9	07716	CEAE23200F
A12A1R239	321-0753-06			RES,FXD,FILM:9K OHM,0.25%,0.125W,TC=T9	07716	CEAE90000C
A12A1R241	321-0306-09	B010100	B011147	RES,FXD,FILM:15.0K OHM,1%,0.125W,TC=T9	01121	ORDER BY DESCR
A12A1R241	325-0410-00	B011148		RES,FXD,FILM:14.3K OHM,1%,0.3W,TC=3.1PPM	18612	S102C 14K300-1%
A12A1R242	321-0306-09	B010100	B011147	RES,FXD,FILM:15.0K OHM,1%,0.125W,TC=T9	01121	ORDER BY DESCR
A12A1R242	325-0410-00	B011148		RES,FXD,FILM:14.3K OHM,1%,0.3W,TC=3.1PPM	18612	S102C 14K300-1%
A12A1R243	321-5045-00			RES,FXD:METAL FILM;68.1 OHM,1%,0.125W,TC=100 PPM;1206,T&R	80009	321-5045-00
A12A1R244	321-5045-00			RES,FXD:METAL FILM;68.1 OHM,1%,0.125W,TC=100 PPM;1206,T&R	80009	321-5045-00
A12A1R250	321-5016-00			RES,FXD:METAL FILM;681 OHM,1%,0.125W,TC=100 PPM;1206,T&R	01121	BCK6810FT
A12A1R253	321-5010-00			RES,FXD:METAL FILM;221 OHM,1%,0.125W,TC=100 PPM;1206,T&R	80009	321-5010-00
A12A1R254	321-5016-00			RES,FXD:METAL FILM;681 OHM,1%,0.125W,TC=100 PPM;1206,T&R	01121	BCK6810FT
A12A1R261	321-5035-00			RES,FXD:METAL FILM;27.4K OHM,1%,0.125W,TC=100 PPM;1206,T&R	80009	321-5035-00
A12A1R271	321-5047-00			RES,FXD:METAL FILM;100K OHM,1%,0.125W,TC=100 PPM;1206,T&R	80009	321-5047-00
A12A1R272	321-5018-00			RES,FXD:METAL FILM;1.0K OHM,1%,0.125W,TC=100 PPM;1206,T&R	80009	321-5018-00
A12A1R273	321-5030-00			RES,FXD:METAL FILM;10.0K OHM,1%,0.125W,TC=100 PPM;1206,T&R	80009	321-5030-00
A12A1R281	321-5006-00			RES,FXD:METAL FILM;100 OHM,1%,0.125W,TC=100 PPM;1206,T&R	80009	321-5006-00
A12A1R283	321-5018-00			RES,FXD:METAL FILM;1.0K OHM,1%,0.125W,TC=100 PPM;1206,T&R	80009	321-5018-00
A12A1R284	321-5023-00			RES,FXD:METAL FILM;2.74K OHM,1%,0.125W,TC=100 PPM;1206,T&R	80009	321-5023-00
A12A1R285	321-5025-00			RES,FXD:METAL FILM;3.92K OHM,1%,0.125W,TC=100 PPM;1206,T&R	80009	321-5025-00
A12A1R286	321-5006-00			RES,FXD:METAL FILM;100 OHM,1%,0.125W,TC=100 PPM;1206,T&R	80009	321-5006-00
A12A1R287	321-5024-00			RES,FXD:METAL FILM;3.32K OHM,1%,0.125W,TC=100 PPM;1206,T&R	80009	321-5024-00
A12A1R288	321-5027-00			RES,FXD:METAL FILM;5.62K OHM,1%,0.125W,TC=100 PPM;1206,T&R	80009	321-5027-00
A12A1R289	321-5006-00			RES,FXD:METAL FILM;100 OHM,1%,0.125W,TC=100 PPM;1206,T&R	80009	321-5006-00
A12A1R291	321-5018-00			RES,FXD:METAL FILM;1.0K OHM,1%,0.125W,TC=100 PPM;1206,T&R	80009	321-5018-00
A12A1R311	321-5045-00			RES,FXD:METAL FILM;68.1 OHM,1%,0.125W,TC=100 PPM;1206,T&R	80009	321-5045-00
A12A1R313	321-5045-00			RES,FXD:METAL FILM;68.1 OHM,1%,0.125W,TC=100 PPM;1206,T&R	80009	321-5045-00
A12A1R320	321-5006-00			RES,FXD:METAL FILM;100 OHM,1%,0.125W,TC=100 PPM;1206,T&R	80009	321-5006-00
A12A1R323	321-0924-07			RES,FXD,FILM:40K OHM,0.1%,0.125W,TC=T9	80009	321-0924-07
A12A1R324	321-0289-07	B010100	B010475	RES,FXD,FILM:10.0K OHM,0.1%,0.125W,TC=T9	80009	321-0289-07
A12A1R324	321-0306-09	B010476		RES,FXD,FILM:15.0K OHM,1%,0.125W,TC=T9	01121	ORDER BY DESCR
A12A1R330	321-0193-07			RES,FXD,FILM:1K OHM,0.1%,0.125W,TC=T9	80009	321-0193-07
A12A1R331	321-1722-07			RES,FXD,FILM:3.39K OHM,0.1%,0.125W,TC=T9	19701	5033RE3K390B
A12A1R332	321-5006-00			RES,FXD:METAL FILM;100 OHM,1%,0.125W,TC=100 PPM;1206,T&R	80009	321-5006-00

Component No.	Tektronix Part No.	Serial/Assembly No. Effective	Dscont	Name & Description	Mfr. Code	Mfr. Part No.
A12A1R335	321-5006-00			RES,FXD:METAL FILM;100 OHM,1%,0.125W,TC=100 PPM;1206,T&R	80009	321-5006-00
A12A1R336	321-5006-00			RES,FXD:METAL FILM;100 OHM,1%,0.125W,TC=100 PPM;1206,T&R	80009	321-5006-00
A12A1R339	321-5006-00			RES,FXD:METAL FILM;100 OHM,1%,0.125W,TC=100 PPM;1206,T&R	80009	321-5006-00
A12A1R350	321-5000-00			RES,FXD:METAL FILM;10 OHM,1%,0.125W,TC=100 PPM;1206,T&R	57668	MCR18EZHFW10E
A12A1R362	321-5030-00			RES,FXD:METAL FILM;10.0K OHM,1%,0.125W,TC=100 PPM;1206,T&R	80009	321-5030-00
A12A1R371	321-5030-00			RES,FXD:METAL FILM;10.0K OHM,1%,0.125W,TC=100 PPM;1206,T&R	80009	321-5030-00
A12A1R373	321-5030-00			RES,FXD:METAL FILM;10.0K OHM,1%,0.125W,TC=100 PPM;1206,T&R	80009	321-5030-00
A12A1R375	321-5030-00			RES,FXD:METAL FILM;10.0K OHM,1%,0.125W,TC=100 PPM;1206,T&R	80009	321-5030-00
A12A1R380	321-5006-00			RES,FXD:METAL FILM;100 OHM,1%,0.125W,TC=100 PPM;1206,T&R	80009	321-5006-00
A12A1R381	321-5018-00			RES,FXD:METAL FILM;1.0K OHM,1%,0.125W,TC=100 PPM;1206,T&R	80009	321-5018-00
A12A1R382	321-5029-00			RES,FXD:METAL FILM;8.25K OHM,1%,0.125W,TC=100 PPM;1206,T&R	80009	321-5029-00
A12A1R383	321-5023-00			RES,FXD:METAL FILM;2.74K OHM,1%,0.125W,TC=100 PPM;1206,T&R	80009	321-5023-00
A12A1R384	321-5006-00			RES,FXD:METAL FILM;100 OHM,1%,0.125W,TC=100 PPM;1206,T&R	80009	321-5006-00
A12A1R385	321-5018-00			RES,FXD:METAL FILM;1.0K OHM,1%,0.125W,TC=100 PPM;1206,T&R	80009	321-5018-00
A12A1R386	321-5018-00			RES,FXD:METAL FILM;1.0K OHM,1%,0.125W,TC=100 PPM;1206,T&R	80009	321-5018-00
A12A1R387	321-5006-00			RES,FXD:METAL FILM;100 OHM,1%,0.125W,TC=100 PPM;1206,T&R	80009	321-5006-00
A12A1R430	321-0222-09			RES,FXD,FILM:2.00K OHM,1,0.125W,TC=T9	07716	CEAE20000F
A12A1R431	321-0222-09			RES,FXD,FILM:2.00K OHM,1,0.125W,TC=T9	07716	CEAE20000F
A12A1R440	321-0289-07			RES,FXD,FILM:10.0K OHM,0.1%,0.125W,TC=T9	80009	321-0289-07
A12A1R441	321-0289-07			RES,FXD,FILM:10.0K OHM,0.1%,0.125W,TC=T9	80009	321-0289-07
A12A1R444	321-0193-07			RES,FXD,FILM:1K OHM,0.1%,0.125W,TC=T9	80009	321-0193-07
A12A1R446	321-5042-00			RES,FXD:METAL FILM;39.2 OHM,1%,0.125W,TC=100 PPM;1206,T&R	80009	321-5042-00
A12A1R450	321-5000-00			RES,FXD:METAL FILM;10 OHM,1%,0.125W,TC=100 PPM;1206,T&R	57668	MCR18EZHFW10E
A12A1R453	321-5042-00			RES,FXD:METAL FILM;39.2 OHM,1%,0.125W,TC=100 PPM;1206,T&R	80009	321-5042-00
A12A1R472	321-5030-00			RES,FXD:METAL FILM;10.0K OHM,1%,0.125W,TC=100 PPM;1206,T&R	80009	321-5030-00
A12A1R473	321-5030-00			RES,FXD:METAL FILM;10.0K OHM,1%,0.125W,TC=100 PPM;1206,T&R	80009	321-5030-00
A12A1R474	321-5044-00			RES,FXD:METAL FILM;56.2 OHM,1%,0.125W,TC=100 PPM;1206,T&R	01121	BCD56R2FT
A12A1R475	321-5044-00			RES,FXD:METAL FILM;56.2 OHM,1%,0.125W,TC=100 PPM;1206,T&R	01121	BCD56R2FT
A12A1R476	321-5030-00			RES,FXD:METAL FILM;10.0K OHM,1%,0.125W,TC=100 PPM;1206,T&R	80009	321-5030-00
A12A1R477	321-5006-00			RES,FXD:METAL FILM;100 OHM,1%,0.125W,TC=100 PPM;1206,T&R	80009	321-5006-00
A12A1R478	321-5030-00			RES,FXD:METAL FILM;10.0K OHM,1%,0.125W,TC=100 PPM;1206,T&R	80009	321-5030-00
A12A1R482	321-5006-00			RES,FXD:METAL FILM;100 OHM,1%,0.125W,TC=100 PPM;1206,T&R	80009	321-5006-00

Component No.	Tektronix Part No.	Serial/Assembly No. Effective	Dscont	Name & Description	Mfr. Code	Mfr. Part No.
A12A1R484	321-5004-00			RES,FXD:METAL FILM;22.1 OHM,1%,0.125W,TC=100 PPM;1206,T&R	80009	321-5004-00
A12A1R485	321-5004-00			RES,FXD:METAL FILM;22.1 OHM,1%,0.125W,TC=100 PPM;1206,T&R	80009	321-5004-00
A12A1R486	321-5004-00			RES,FXD:METAL FILM;22.1 OHM,1%,0.125W,TC=100 PPM;1206,T&R	80009	321-5004-00
A12A1R487	321-5000-00			RES,FXD:METAL FILM;10 OHM,1%,0.125W,TC=100 PPM;1206,T&R	57668	MCR18EZHFW10E
A12A1R491	321-5000-00			RES,FXD:METAL FILM;10 OHM,1%,0.125W,TC=100 PPM;1206,T&R	57668	MCR18EZHFW10E
A12A1R530	321-5048-00			RES,FXD:METAL FILM;332K OHM,1%,0.125W,TC=100 PPM;1206,T&R	80009	321-5048-00
A12A1R541	321-5023-00			RES,FXD:METAL FILM;2.74K OHM,1%,0.125W,TC=100 PPM;1206,T&R	80009	321-5023-00
A12A1R542	321-5030-00			RES,FXD:METAL FILM;10.0K OHM,1%,0.125W,TC=100 PPM;1206,T&R	80009	321-5030-00
A12A1R543	321-5020-00			RES,FXD:METAL FILM;1.5K OHM,1%,0.125W,TC=100 PPM;1206,T&R	80009	321-5020-00
A12A1R545	321-5032-00			RES,FXD:METAL FILM;15.0K OHM,1%,0.125W,TC=100 PPM;1206,T&R	80009	321-5032-00
A12A1R546	321-5041-00			RES,FXD:METAL FILM;82.5K OHM,1%,0.125W,TC=100 PPM;1206,T&R	80009	321-5041-00
A12A1R547	321-5027-00			RES,FXD:METAL FILM;5.62K OHM,1%,0.125W,TC=100 PPM;1206,T&R	80009	321-5027-00
A12A1R551	321-5000-00			RES,FXD:METAL FILM;10 OHM,1%,0.125W,TC=100 PPM;1206,T&R	57668	MCR18EZHFW10E
A12A1R552	321-5042-00			RES,FXD:METAL FILM;39.2 OHM,1%,0.125W,TC=100 PPM;1206,T&R	80009	321-5042-00
A12A1R561	321-5025-00			RES,FXD:METAL FILM;3.92K OHM,1%,0.125W,TC=100 PPM;1206,T&R	80009	321-5025-00
A12A1R563	321-5032-00			RES,FXD:METAL FILM;15.0K OHM,1%,0.125W,TC=100 PPM;1206,T&R	80009	321-5032-00
A12A1R564	321-5025-00			RES,FXD:METAL FILM;3.92K OHM,1%,0.125W,TC=100 PPM;1206,T&R	80009	321-5025-00
A12A1R566	321-5032-00			RES,FXD:METAL FILM;15.0K OHM,1%,0.125W,TC=100 PPM;1206,T&R	80009	321-5032-00
A12A1R568	321-5006-00			RES,FXD:METAL FILM;100 OHM,1%,0.125W,TC=100 PPM;1206,T&R	80009	321-5006-00
A12A1R569	321-5006-00			RES,FXD:METAL FILM;100 OHM,1%,0.125W,TC=100 PPM;1206,T&R	80009	321-5006-00
A12A1R571	321-5047-00			RES,FXD:METAL FILM;100K OHM,1%,0.125W,TC=100 PPM;1206,T&R	80009	321-5047-00
A12A1R572	321-5018-00			RES,FXD:METAL FILM;1.0K OHM,1%,0.125W,TC=100 PPM;1206,T&R	80009	321-5018-00
A12A1R573	321-5047-00			RES,FXD:METAL FILM;100K OHM,1%,0.125W,TC=100 PPM;1206,T&R	80009	321-5047-00
A12A1R574	321-5018-00			RES,FXD:METAL FILM;1.0K OHM,1%,0.125W,TC=100 PPM;1206,T&R	80009	321-5018-00
A12A1R575	321-5004-00			RES,FXD:METAL FILM;22.1 OHM,1%,0.125W,TC=100 PPM;1206,T&R	80009	321-5004-00
A12A1R576	321-5030-00			RES,FXD:METAL FILM;10.0K OHM,1%,0.125W,TC=100 PPM;1206,T&R	80009	321-5030-00
A12A1R600	321-5045-00			RES,FXD:METAL FILM;68.1 OHM,1%,0.125W,TC=100 PPM;1206,T&R	80009	321-5045-00
A12A1R601	321-5045-00			RES,FXD:METAL FILM;68.1 OHM,1%,0.125W,TC=100 PPM;1206,T&R	80009	321-5045-00
A12A1R602	321-5027-00			RES,FXD:METAL FILM;5.62K OHM,1%,0.125W,TC=100 PPM;1206,T&R	80009	321-5027-00

Component No.	Tektronix Part No.	Serial/Assembly No. Effective	Dscont	Name & Description	Mfr. Code	Mfr. Part No.
A12A1R603	321-5022-00			RES,FXD:METAL FILM;2.21K OHM,1%,0.125W,TC=100 PPM;1206,T&R	80009	321-5022-00
A12A1R604	321-5015-00			RES,FXD:METAL FILM;562 OHM,1%,0.125W,TC=100 PPM;1206,T&R	80009	321-5015-00
A12A1R610	321-5024-00			RES,FXD:METAL FILM;3.32K OHM,1%,0.125W,TC=100 PPM;1206,T&R	80009	321-5024-00
A12A1R613	321-5003-00			RES,FXD:METAL FILM;18.2 OHM,1%,0.125W,TC=100 PPM;1206,T&R	57668	MCR18EZHFW 18E2
A12A1R615	321-5015-00			RES,FXD:METAL FILM;562 OHM,1%,0.125W,TC=100 PPM;1206,T&R	80009	321-5015-00
A12A1R617	321-5050-00			RES,FXD:METAL FILM;33.2 OHM,1%,0.125W,TC=100 PPM;1206,T&R	57668	MCR18FWEA33E2
A12A1R620	311-2275-00			RES,VAR,NONWW:TRMR,200 OHM,20%,0.5W	80009	311-2275-00
A12A1R622	321-5017-00			RES,FXD:METAL FILM;825 OHM,1%,0.125W,TC=100 PPM;1206,T&R	80009	321-5017-00
A12A1R624	321-5022-00			RES,FXD:METAL FILM;2.21K OHM,1%,0.125W,TC=100 PPM;1206,T&R	80009	321-5022-00
A12A1R632	321-5010-00			RES,FXD:METAL FILM;221 OHM,1%,0.125W,TC=100 PPM;1206,T&R	80009	321-5010-00
A12A1R633	321-5019-00			RES,FXD:METAL FILM;1.21K OHM,1%,0.125W,TC=100 PPM;1206,T&R	80009	321-5019-00
A12A1R634	321-5025-00			RES,FXD:METAL FILM;3.92K OHM,1%,0.125W,TC=100 PPM;1206,T&R	80009	321-5025-00
A12A1R636	321-5010-00			RES,FXD:METAL FILM;221 OHM,1%,0.125W,TC=100 PPM;1206,T&R	80009	321-5010-00
A12A1R637	321-5022-00			RES,FXD:METAL FILM;2.21K OHM,1%,0.125W,TC=100 PPM;1206,T&R	80009	321-5022-00
A12A1R638	321-5004-00			RES,FXD:METAL FILM;22.1 OHM,1%,0.125W,TC=100 PPM;1206,T&R	80009	321-5004-00
A12A1R640	321-5018-00			RES,FXD:METAL FILM;1.0K OHM,1%,0.125W,TC=100 PPM;1206,T&R	80009	321-5018-00
A12A1R641	321-5018-00			RES,FXD:METAL FILM;1.0K OHM,1%,0.125W,TC=100 PPM;1206,T&R	80009	321-5018-00
A12A1R642	321-5021-00			RES,FXD:METAL FILM;1.82K OHM,1%,0.125W,TC=100 PPM;1206,T&R	80009	321-5021-00
A12A1R643	321-5026-00			RES,FXD:METAL FILM;4.75K OHM,1%,0.125W,TC=100 PPM;1206,T&R	80009	321-5026-00
A12A1R644	321-5024-00			RES,FXD:METAL FILM;3.32K OHM,1%,0.125W,TC=100 PPM;1206,T&R	80009	321-5024-00
A12A1R645	321-5038-00			RES,FXD:METAL FILM;47.5K OHM,1%,0.125W,TC=100 PPM;1206,T&R	80009	321-5038-00
A12A1R651	321-5024-00			RES,FXD:METAL FILM;3.32K OHM,1%,0.125W,TC=100 PPM;1206,T&R	80009	321-5024-00
A12A1R653	321-5038-00			RES,FXD:METAL FILM;47.5K OHM,1%,0.125W,TC=100 PPM;1206,T&R	80009	321-5038-00
A12A1R654	321-5021-00			RES,FXD:METAL FILM;1.82K OHM,1%,0.125W,TC=100 PPM;1206,T&R	80009	321-5021-00
A12A1R655	321-5026-00			RES,FXD:METAL FILM;4.75K OHM,1%,0.125W,TC=100 PPM;1206,T&R	80009	321-5026-00
A12A1R656	321-5030-00			RES,FXD:METAL FILM;10.0K OHM,1%,0.125W,TC=100 PPM;1206,T&R	80009	321-5030-00
A12A1R657	321-5030-00			RES,FXD:METAL FILM;10.0K OHM,1%,0.125W,TC=100 PPM;1206,T&R	80009	321-5030-00
A12A1R670	321-5043-00			RES,FXD:METAL FILM;47.5 OHM,1%,0.125W,TC=100 PPM;1206,T&R	80009	321-5043-00
A12A1R673	321-5045-00			RES,FXD:METAL FILM;68.1 OHM,1%,0.125W,TC=100 PPM;1206,T&R	80009	321-5045-00
A12A1R701	321-5038-00			RES,FXD:METAL FILM;47.5K OHM,1%,0.125W,TC=100 PPM;1206,T&R	80009	321-5038-00

Component No.	Tektronix Part No.	Serial/Assembly No. Effective	Dscont	Name & Description	Mfr. Code	Mfr. Part No.
A12A1R702	321-5032-00			RES,FXD:METAL FILM;15.0K OHM,1%,0.125W,TC=100 PPM;1206,T&R	80009	321-5032-00
A12A1R709	321-1542-00			RES,FXD,FILM:4.37M OHM,1.0%,0.125W,TC=T0	07716	
A12A1R710	321-5044-00			RES,FXD:METAL FILM;56.2 OHM,1%,0.125W,TC=100 PPM;1206,T&R	01121	BCD56R2FT
A12A1R711	321-5022-00			RES,FXD:METAL FILM;2.21K OHM,1%,0.125W,TC=100 PPM;1206,T&R	80009	321-5022-00
A12A1R712	321-5051-00			RES,FXD:METAL FILM;0 OHM,1%,0.125W,TC=100 PPM;1206,T&R	80009	321-5051-00
A12A1R713	321-5045-00			RES,FXD:METAL FILM;68.1 OHM,1%,0.125W,TC=100 PPM;1206,T&R	80009	321-5045-00
A12A1R714	321-5015-00			RES,FXD:METAL FILM;562 OHM,1%,0.125W,TC=100 PPM;1206,T&R	80009	321-5015-00
A12A1R716	321-5047-00			RES,FXD:METAL FILM;100K OHM,1%,0.125W,TC=100 PPM;1206,T&R	80009	321-5047-00
A12A1R718	321-5027-00			RES,FXD:METAL FILM;5.62K OHM,1%,0.125W,TC=100 PPM;1206,T&R	80009	321-5027-00
A12A1R719	321-5050-00			RES,FXD:METAL FILM;33.2 OHM,1%,0.125W,TC=100 PPM;1206,T&R	57668	MCR18FWEA33E2
A12A1R725	321-5044-00			RES,FXD:METAL FILM;56.2 OHM,1%,0.125W,TC=100 PPM;1206,T&R	01121	BCD56R2FT
A12A1R727	321-5044-00			RES,FXD:METAL FILM;56.2 OHM,1%,0.125W,TC=100 PPM;1206,T&R	01121	BCD56R2FT
A12A1R730	321-5010-00			RES,FXD:METAL FILM;221 OHM,1%,0.125W,TC=100 PPM;1206,T&R	80009	321-5010-00
A12A1R734	321-5045-00			RES,FXD:METAL FILM;68.1 OHM,1%,0.125W,TC=100 PPM;1206,T&R	80009	321-5045-00
A12A1R736	321-5044-00			RES,FXD:METAL FILM;56.2 OHM,1%,0.125W,TC=100 PPM;1206,T&R	01121	BCD56R2FT
A12A1R745	321-5047-00			RES,FXD:METAL FILM;100K OHM,1%,0.125W,TC=100 PPM;1206,T&R	80009	321-5047-00
A12A1R746	311-2168-00			RES,VAR,NONWW:10K OHM,10%,0.5W,20 TURN TRIMMER,METAL FOIL	80009	311-2168-00
A12A1R750	321-5047-00			RES,FXD:METAL FILM;100K OHM,1%,0.125W,TC=100 PPM;1206,T&R	80009	321-5047-00
A12A1R751	321-5047-00			RES,FXD:METAL FILM;100K OHM,1%,0.125W,TC=100 PPM;1206,T&R	80009	321-5047-00
A12A1R752	321-5031-00			RES,FXD:METAL FILM;12.1K OHM,1%,0.125W,TC=100 PPM;1206,T&R	80009	321-5031-00
A12A1R753	321-5047-00			RES,FXD:METAL FILM;100K OHM,1%,0.125W,TC=100 PPM;1206,T&R	80009	321-5047-00
A12A1R754	321-5030-00			RES,FXD:METAL FILM;10.0K OHM,1%,0.125W,TC=100 PPM;1206,T&R	80009	321-5030-00
A12A1R755	321-5015-00			RES,FXD:METAL FILM;562 OHM,1%,0.125W,TC=100 PPM;1206,T&R	80009	321-5015-00
A12A1R756	321-5047-00			RES,FXD:METAL FILM;100K OHM,1%,0.125W,TC=100 PPM;1206,T&R	80009	321-5047-00
A12A1R772	321-5030-00			RES,FXD:METAL FILM;10.0K OHM,1%,0.125W,TC=100 PPM;1206,T&R	80009	321-5030-00
A12A1R801	321-5030-00			RES,FXD:METAL FILM;10.0K OHM,1%,0.125W,TC=100 PPM;1206,T&R	80009	321-5030-00
A12A1R812	321-5037-00			RES,FXD:METAL FILM;39.2K OHM,1%,0.125W,TC=100 PPM;1206,T&R	80009	321-5037-00
A12A1R813	321-5018-00			RES,FXD:METAL FILM;1.0K OHM,1%,0.125W,TC=100 PPM;1206,T&R	80009	321-5018-00
A12A1R815	321-0822-06			RES,FXD,FILM:1.76K OHM,0.25%,0.125W,TC=T9	80009	321-0822-06
A12A1R816	321-1228-07			RES,FXD,FILM:2.34K OHM,0.1%,0.125W,TC=T9	07716	
A12A1R820	321-0361-06			RES,FXD,FILM:56.2K OHM,0.25%,0.125W	80009	321-0361-06
A12A1R821	321-0641-07			RES,FXD,FILM:1.8K OHM,0.1,0.125W,TC=T9	07716	CEAE 18000B

Component No.	Tektronix Part No.	Serial/Assembly No. Effective	Dscont	Name & Description	Mfr. Code	Mfr. Part No.
A12A1R822	321-0926-07			RES,FXD,FILM:4K OHM,0.1%,0.125W,TC=T9	19701	5033RE4K00B
A12A1R823	321-5006-00			RES,FXD:METAL FILM;100 OHM,1%,0.125W,TC=100 PPM;1206,T&R	80009	321-5006-00
A12A1R827	311-1245-00			RES,VAR,NONWW:TRMR,10K OHM,0.5W	80009	311-1245-00
A12A1R828	321-5043-00			RES,FXD:METAL FILM;47.5 OHM,1%,0.125W,TC=100 PPM;1206,T&R	80009	321-5043-00
A12A1R832	321-5030-00			RES,FXD:METAL FILM;10.0K OHM,1%,0.125W,TC=100 PPM;1206,T&R	80009	321-5030-00
A12A1R833	321-5030-00			RES,FXD:METAL FILM;10.0K OHM,1%,0.125W,TC=100 PPM;1206,T&R	80009	321-5030-00
A12A1R840	321-5022-00			RES,FXD:METAL FILM;2.21K OHM,1%,0.125W,TC=100 PPM;1206,T&R	80009	321-5022-00
A12A1R841	321-5022-00			RES,FXD:METAL FILM;2.21K OHM,1%,0.125W,TC=100 PPM;1206,T&R	80009	321-5022-00
A12A1R842	321-5022-00			RES,FXD:METAL FILM;2.21K OHM,1%,0.125W,TC=100 PPM;1206,T&R	80009	321-5022-00
A12A1R843	321-5022-00			RES,FXD:METAL FILM;2.21K OHM,1%,0.125W,TC=100 PPM;1206,T&R	80009	321-5022-00
A12A1R844	321-5042-00			RES,FXD:METAL FILM;39.2 OHM,1%,0.125W,TC=100 PPM;1206,T&R	80009	321-5042-00
A12A1R845	321-5042-00			RES,FXD:METAL FILM;39.2 OHM,1%,0.125W,TC=100 PPM;1206,T&R	80009	321-5042-00
A12A1R846	321-5045-00			RES,FXD:METAL FILM;68.1 OHM,1%,0.125W,TC=100 PPM;1206,T&R	80009	321-5045-00
A12A1R847	321-5045-00			RES,FXD:METAL FILM;68.1 OHM,1%,0.125W,TC=100 PPM;1206,T&R	80009	321-5045-00
A12A1R848	321-5019-00			RES,FXD:METAL FILM;1.21K OHM,1%,0.125W,TC=100 PPM;1206,T&R	80009	321-5019-00
A12A1R861	321-5035-00			RES,FXD:METAL FILM;27.4K OHM,1%,0.125W,TC=100 PPM;1206,T&R	80009	321-5035-00
A12A1R863	321-5035-00			RES,FXD:METAL FILM;27.4K OHM,1%,0.125W,TC=100 PPM;1206,T&R	80009	321-5035-00
A12A1R870	321-5024-00			RES,FXD:METAL FILM;3.32K OHM,1%,0.125W,TC=100 PPM;1206,T&R	80009	321-5024-00
A12A1R871	321-5024-00			RES,FXD:METAL FILM;3.32K OHM,1%,0.125W,TC=100 PPM;1206,T&R	80009	321-5024-00
A12A1R872	321-5030-00			RES,FXD:METAL FILM;10.0K OHM,1%,0.125W,TC=100 PPM;1206,T&R	80009	321-5030-00
A12A1R873	321-5030-00			RES,FXD:METAL FILM;10.0K OHM,1%,0.125W,TC=100 PPM;1206,T&R	80009	321-5030-00
A12A1R875	321-5030-00			RES,FXD:METAL FILM;10.0K OHM,1%,0.125W,TC=100 PPM;1206,T&R	80009	321-5030-00
A12A1R900	325-0413-00			RES,FXD,FILM:13 OHM,1%,2W,TC=3.1PPM	18612	S106D 13R000-1%
A12A1R901	321-5047-00			RES,FXD:METAL FILM;100K OHM,1%,0.125W,TC=100 PPM;1206,T&R	80009	321-5047-00
A12A1R903	321-5047-00			RES,FXD:METAL FILM;100K OHM,1%,0.125W,TC=100 PPM;1206,T&R	80009	321-5047-00
A12A1R904	321-5047-00			RES,FXD:METAL FILM;100K OHM,1%,0.125W,TC=100 PPM;1206,T&R	80009	321-5047-00
A12A1R905	308-0142-00			RES,FXD,WW:30 OHM,5%,3W	07088	
A12A1R912	321-0926-07			RES,FXD,FILM:4K OHM,0.1%,0.125W,TC=T9	19701	5033RE4K00B
A12A1R913	321-0193-07	B010100	B010475	RES,FXD,FILM:1K OHM,0.1%,0.125W,TC=T9	80009	321-0193-07
A12A1R913	321-0222-09	B010476		RES,FXD,FILM:2.00K OHM,1,0.125W,TC=T9	07716	CEAE20000F
A12A1R915	321-5006-00			RES,FXD:METAL FILM;100 OHM,1%,0.125W,TC=100 PPM;1206,T&R	80009	321-5006-00
A12A1R916	321-5006-00			RES,FXD:METAL FILM;100 OHM,1%,0.125W,TC=100 PPM;1206,T&R	80009	321-5006-00
A12A1R917	321-0481-00			RES,FXD,FILM:1M OHM,1%,0.125W,TC=T0	80009	321-0481-00
A12A1R918	311-1245-00			RES,VAR,NONWW:TRMR,10K OHM,0.5W	80009	311-1245-00

Component No.	Tektronix Part No.	Serial/Assembly No. Effective	Dscont	Name & Description	Mfr. Code	Mfr. Part No.
A12A1R920	311-1245-00			RES,VAR,NONWW:TRMR,10K OHM,0.5W	80009	311-1245-00
A12A1R921	321-0926-07			RES,FXD,FILM:4K OHM,0.1%,0.125W,TC=T9	19701	5033RE4K00B
A12A1R922	325-0410-00			RES,FXD,FILM:14.3K OHM,1%,0.3W,TC=3.1PPM	18612	S102C 14K300-1%
A12A1R923	325-0414-00			RES,FXD,FILM:3.2K OHM,1%,0.3W,TC=3.1PPM	18612	S102C 3K200-1%
A12A1R924	321-0926-07			RES,FXD,FILM:4K OHM,0.1%,0.125W,TC=T9	19701	5033RE4K00B
A12A1R925	321-0278-07			RES,FXD,FILM:7.68K OHM,0.1%,0.125W,TC=T9	57027	RC55-D-7K68-B-R
A12A1R926	325-0412-00			RES,FXD,FILM:1.5K OHM,1%,0.3W,TC=3.1PPM	18612	S102C 1K500-1%
A12A1R927	321-5045-00			RES,FXD:METAL FILM;68.1 OHM,1%,0.125W,TC=100 PPM;1206,T&R	80009	321-5045-00
A12A1R928	321-5045-00			RES,FXD:METAL FILM;68.1 OHM,1%,0.125W,TC=100 PPM;1206,T&R	80009	321-5045-00
A12A1R929	321-5048-00			RES,FXD:METAL FILM;332K OHM,1%,0.125W,TC=100 PPM;1206;T&R	80009	321-5048-00
A12A1R930	321-5030-00			RES,FXD:METAL FILM;10.0K OHM,1%,0.125W,TC=100 PPM;1206,T&R	80009	321-5030-00
A12A1R931	311-2168-00			RES,VAR,NONWW:10K OHM,10%,0.5W,20 TURN TRIMMER,METAL FOIL	80009	311-2168-00
A12A1R932	321-5027-00			RES,FXD:METAL FILM;5.62K OHM,1%,0.125W,TC=100 PPM;1206,T&R	80009	321-5027-00
A12A1R933	321-5015-00			RES,FXD:METAL FILM;562 OHM,1%,0.125W,TC=100 PPM;1206,T&R	80009	321-5015-00
A12A1R934	321-5043-00			RES,FXD:METAL FILM;47.5 OHM,1%,0.125W,TC=100 PPM;1206,T&R	80009	321-5043-00
A12A1R935	321-5002-00			RES,FXD:METAL FILM;15 OHM,1%,0.125W,TC=100 PPM;1206,T&R	57668	MCR18EZHFW 15E0
A12A1R936	321-5035-00			RES,FXD:METAL FILM;27.4K OHM,1%,0.125W,TC=100 PPM;1206,T&R	80009	321-5035-00
A12A1R937	321-5037-00			RES,FXD:METAL FILM;39.2K OHM,1%,0.125W,TC=100 PPM;1206,T&R	80009	321-5037-00
A12A1R938	321-5038-00			RES,FXD:METAL FILM;47.5K OHM,1%,0.125W,TC=100 PPM;1206,T&R	80009	321-5038-00
A12A1R939	321-5034-00			RES,FXD:METAL FILM;22.1K OHM,1%,0.125W,TC=100 PPM;1206,T&R	80009	321-5034-00
A12A1R940	321-0816-07			RES,FXD,FILM:5K OHM,0.1%,0.125W,TC=T9	80009	321-0816-07
A12A1R941	321-5042-00			RES,FXD:METAL FILM;39.2 OHM,1%,0.125W,TC=100 PPM;1206,T&R	80009	321-5042-00
A12A1R942	321-5006-00			RES,FXD:METAL FILM;100 OHM,1%,0.125W,TC=100 PPM;1206,T&R	80009	321-5006-00
A12A1R943	321-5006-00			RES,FXD:METAL FILM;100 OHM,1%,0.125W,TC=100 PPM;1206,T&R	80009	321-5006-00
A12A1R944	321-5047-00			RES,FXD:METAL FILM;100K OHM,1%,0.125W,TC=100 PPM;1206,T&R	80009	321-5047-00
A12A1R945	321-5049-00			RES,FXD:METAL FILM;1M OHM,1%,0.125W,TC=100 PPM;1206,T&R	80009	321-5049-00
A12A1R946	321-5014-00			RES,FXD:METAL FILM;475 OHM,1%,0.125W,TC=100 PPM;1206,T&R	80009	321-5014-00
A12A1R947	321-5009-00			RES,FXD:METAL FILM;182 OHM,1%,0.125W,TC=100 PPM;1206,T&R	80009	321-5009-00
A12A1R948	321-5014-00			RES,FXD:METAL FILM;475 OHM,1%,0.125W,TC=100 PPM;1206,T&R	80009	321-5014-00
A12A1R970	321-5030-00			RES,FXD:METAL FILM;10.0K OHM,1%,0.125W,TC=100 PPM;1206,T&R	80009	321-5030-00
A12A1R972	321-5030-00			RES,FXD:METAL FILM;10.0K OHM,1%,0.125W,TC=100 PPM;1206,T&R	80009	321-5030-00
A12A1R977	321-5030-00			RES,FXD:METAL FILM;10.0K OHM,1%,0.125W,TC=100 PPM;1206,T&R	80009	321-5030-00
A12A1R995	321-5018-00			RES,FXD:METAL FILM;1.0K OHM,1%,0.125W,TC=100 PPM;1206,T&R	80009	321-5018-00

Component No.	Tektronix Part No.	Serial/Assembly No. Effective	Dscont	Name & Description	Mfr. Code	Mfr. Part No.
A12A1R996	321-5047-00			RES,FXD:METAL FILM;100K OHM,1%,0.125W,TC=100 PPM;1206,T&R	80009	321-5047-00
A12A1U166	156-5082-01			IC,LINEAR:BIPOLAR,OP-AMP;LOW OFFSET;OP07CD, SO8.150,16MM T&R	80009	156-5082-01
A12A1U174	156-5082-01			IC,LINEAR:BIPOLAR,OP-AMP;LOW OFFSET;OP07CD, SO8.150,16MM T&R	80009	156-5082-01
A12A1U260	156-5155-00			IC,DIGITAL:HCMOS,GATE;HEX INV;74HC04,SO14.150,TUBE	80009	156-5155-00
A12A1U270	156-5154-00			IC,DIGITAL:HCMOS,GATE;QUAD 2-INPUT NAND, OD ;74HC03,SO14.150,TUBE	80009	156-5154-00
A12A1U274	156-5142-00			IC,DIGITAL:HCTCMOS,DEMUX/DECODER;DUAL 2-TO-4 DECODER;74HCT139,SO16.150,TUBE	80009	156-5142-00
A12A1U282	156-5018-00			IC,LINEAR:BIPOLAR,OP-AMP;DUAL,SINGLE SUPPLY ;LM358D,SO8.150,TUBE	80009	156-5018-00
A12A1U360	156-5615-00			IC,DIGITAL:HCMOS,GATE;QUAD 2-INPUT XNOR;74HC7266,SO14.150,TUBE	80009	156-5615-00
A12A1U361	156-5021-01			IC,DIGITAL:CMOS,REGISTER;8-STAGE SHIFT/STORAGE, 3-STATE;4094,SO16.150,16MM T&R	80009	156-5021-01
A12A1U370	156-5080-00			IC,DIGITAL:CMOS,REGISTER;8-STAGE STATIC SHIFT REGISTER;4021B,SO16.150,TUBE	80009	156-5080-00
A12A1U372	156-5227-00			IC,DIGITAL:HCMOS,MULTIVIBRATOR;DUAL RETRIG MONOSTABLE, WITH RESET;74HC123,SO16.150	80009	156-5227-00
A12A1U380	156-5018-00			IC,LINEAR:BIPOLAR,OP-AMP;DUAL,SINGLE SUPPLY ;LM358D,SO8.150,TUBE	80009	156-5018-00
A12A1U460	156-5021-01			IC,DIGITAL:CMOS,REGISTER;8-STAGE SHIFT/STORAGE, 3-STATE;4094,SO16.150,16MM T&R	80009	156-5021-01
A12A1U470	156-5297-00			IC,LINEAR:BIPOLAR,VOLTAGE REGULATOR;ADJUSTABLE,SHUNT,100MA,2%;TL431CD,SO8.150,TUBE	80009	156-5297-00
A12A1U471	156-5074-00			IC,DIGITAL:HCMOS,FLIP FLOP;DUAL D-TYPE;74HC74,SO14.150,TUBE	80009	156-5074-00
A12A1U544	156-5017-01			IC,LINEAR:BIPOLAR,OP-AMP;DUAL;MC1458D,SO8.150,12MM T/R	80009	156-5017-01
A12A1U560	156-5021-01			IC,DIGITAL:CMOS,REGISTER;8-STAGE SHIFT/STORAGE, 3-STATE;4094,SO16.150,16MM T&R	80009	156-5021-01
A12A1U565	156-5082-01			IC,LINEAR:BIPOLAR,OP-AMP;LOW OFFSET;OP07CD, SO8.150,16MM T&R	80009	156-5082-01
A12A1U570	156-5278-00			IC,DIGITAL:HCCMOS,BUFFER/DRIVER;QUAD, LINE DRIVER, 3-STATE;74HC125,SO14.150,TUBE	80009	156-5278-00
A12A1U606	156-5690-00			IC,LINEAR:BIPOLAR,OP-AMP;LOW NOISE;OP27GS,SO8.150,TUBE	80009	156-5690-00
A12A1U614	156-5467-00			IC,LINEAR:BIPOLAR,OP-AMP;1.0GHZ GBW;NE5539D ,SO14.150	80009	156-5467-00
A12A1U650	156-5119-00			IC,LINEAR:BIPOLAR,COMPARATOR;DUAL,OPEN COLLECTOR,80NS;LM319D,SO14.150,TUBE	80009	156-5119-00
A12A1U700	156-5274-01			IC,MISC:CMOS,ANALOG SWITCH;QUAD;DG211,SO16.150,16MM T&R	80009	156-5274-01
A12A1U713	156-5082-01			IC,LINEAR:BIPOLAR,OP-AMP;LOW OFFSET;OP07CD, SO8.150,16MM T&R	80009	156-5082-01
A12A1U720	156-5280-00			IC,LINEAR:BIPOLAR,AMPLIFIER;RF AMP,20DB GAIN,600MHZ;NE5205AD,SO8.150	80009	156-5280-00
A12A1U723	156-5280-00			IC,LINEAR:BIPOLAR,AMPLIFIER;RF AMP,20DB GAIN,600MHZ;NE5205AD,SO8.150	80009	156-5280-00
A12A1U740	156-5082-01			IC,LINEAR:BIPOLAR,OP-AMP;LOW OFFSET;OP07CD, SO8.150,16MM T&R	80009	156-5082-01
A12A1U743	156-5082-01			IC,LINEAR:BIPOLAR,OP-AMP;LOW OFFSET;OP07CD, SO8.150,16MM T&R	80009	156-5082-01
A12A1U757	156-5274-01			IC,MISC:CMOS,ANALOG SWITCH;QUAD;DG211,SO16.150,16MM T&R	80009	156-5274-01
A12A1U810	156-2848-00			IC,LINEAR:	80009	156-2848-00

Component No.	Tektronix Part No.	Serial/Assembly No. Effective	Dscont	Name & Description	Mfr. Code	Mfr. Part No.
A12A1U811	156-5082-01			IC,LINEAR:BIPOLAR,OP-AMP;LOW OFFSET;OP07CD, SO8.150,16MM T&R	80009	156-5082-01
A12A1U820	156-5082-01			IC,LINEAR:BIPOLAR,OP-AMP;LOW OFFSET;OP07CD, SO8.150,16MM T&R	80009	156-5082-01
A12A1U821	156-5082-01			IC,LINEAR:BIPOLAR,OP-AMP;LOW OFFSET;OP07CD, SO8.150,16MM T&R	80009	156-5082-01
A12A1U830	156-5571-00			IC,MISC:CMOS,ANALOG MUX;TRIPLE,2 CHAN;MC140 53B,SO16.150,TUBE	80009	156-5571-00
A12A1U831	156-5570-00			IC,MISC:CMOS,ANALOG MUX;DUAL 4-CHANNEL;MC14 052B,SO16.150,TUBE	80009	156-5570-00
A12A1U845	156-5082-01			IC,LINEAR:BIPOLAR,OP-AMP;LOW OFFSET;OP07CD, SO8.150,16MM T&R	80009	156-5082-01
A12A1U850	156-5300-00			IC,CONVERTER:	80009	156-5300-00
A12A1U852	156-5082-01			IC,LINEAR:BIPOLAR,OP-AMP;LOW OFFSET;OP07CD, SO8.150,16MM T&R	80009	156-5082-01
A12A1U854	156-5082-01			IC,LINEAR:BIPOLAR,OP-AMP;LOW OFFSET;OP07CD, SO8.150,16MM T&R	80009	156-5082-01
A12A1U910	156-5082-01			IC,LINEAR:BIPOLAR,OP-AMP;LOW OFFSET;OP07CD, SO8.150,16MM T&R	80009	156-5082-01
A12A1U920	156-5082-01			IC,LINEAR:BIPOLAR,OP-AMP;LOW OFFSET;OP07CD, SO8.150,16MM T&R	80009	156-5082-01
A12A1U921	156-5082-01			IC,LINEAR:BIPOLAR,OP-AMP;LOW OFFSET;OP07CD, SO8.150,16MM T&R	80009	156-5082-01
A12A1U940	156-5082-01			IC,LINEAR:BIPOLAR,OP-AMP;LOW OFFSET;OP07CD, SO8.150,16MM T&R	80009	156-5082-01
A12A1U941	156-5082-01			IC,LINEAR:BIPOLAR,OP-AMP;LOW OFFSET;OP07CD, SO8.150,16MM T&R	80009	156-5082-01
A12A1U950	156-5300-00			IC,CONVERTER:	80009	156-5300-00
A12A1U952	156-5082-01			IC,LINEAR:BIPOLAR,OP-AMP;LOW OFFSET;OP07CD, SO8.150,16MM T&R	80009	156-5082-01
A12A1U954	156-5082-01			IC,LINEAR:BIPOLAR,OP-AMP;LOW OFFSET;OP07CD, SO8.150,16MM T&R	80009	156-5082-01
A12A1VR160	152-0526-00			DIODE,ZENER:,;6.35V,1%,0.4W;1N829A FMLY,DO-7	14552	DT840615A
A12A1VR803	152-5007-00			DIODE,ZENER:,;9.1V,5%,225MW;MMBZ5239BL,SOT-23,8MM TR	80009	152-5007-00
A12A1VR902	152-5007-00			DIODE,ZENER:,;9.1V,5%,225MW;MMBZ5239BL,SOT-23,8MM TR	80009	152-5007-00
A12A2	----- -----			(PART OF A12) HIGH FREQ VCO		
A12A2C103	283-5004-00			CAP,FXD,CER DI:0.1UF,10%,25V	80009	283-5004-00
A12A2C110	290-5003-00			CAP,FXD,ELCTLT:47UF,20%,10V	80009	290-5003-00
A12A2C111	290-5003-00			CAP,FXD,ELCTLT:47UF,20%,10V	80009	290-5003-00
A12A2C120	290-5003-00			CAP,FXD,ELCTLT:47UF,20%,10V	80009	290-5003-00
A12A2C133	283-5011-00			CAP,FXD,CER DI:33PF,5%,50V	95275	VJ1206A330JXA
A12A2C200	283-5003-00			CAP,FXD,CER DI:0.01UF,10%,50V	80009	283-5003-00
A12A2C204	283-5003-00			CAP,FXD,CER DI:0.01UF,10%,50V	80009	283-5003-00
A12A2C212	283-5004-00			CAP,FXD,CER DI:0.1UF,10%,25V	80009	283-5004-00
A12A2C222	283-5004-00			CAP,FXD,CER DI:0.1UF,10%,25V	80009	283-5004-00
A12A2C224	283-5004-00			CAP,FXD,CER DI:0.1UF,10%,25V	80009	283-5004-00
A12A2C231	283-5011-00			CAP,FXD,CER DI:33PF,5%,50V	95275	VJ1206A330JXA
A12A2C233	283-5009-00			CAP,FXD,CER DI:15PF,5%,50V	54583	C3216C0G1H150J
A12A2C234	283-5025-00			CAP,FXD,CER DI:220PF,5%,50V	80009	283-5025-00
A12A2C302	283-5004-00			CAP,FXD,CER DI:0.1UF,10%,25V	80009	283-5004-00
A12A2C310	283-5004-00			CAP,FXD,CER DI:0.1UF,10%,25V	80009	283-5004-00
A12A2C321	283-5004-00			CAP,FXD,CER DI:0.1UF,10%,25V	80009	283-5004-00
A12A2C331	283-5022-00			CAP,FXD,CER DI:47PF,5%,50V	54583	
A12A2C332	283-5001-00			CAP,FXD,CER DI:100PF,5%,50V	80009	283-5001-00
A12A2C333	290-5002-00			CAP,FXD,ELCTLT:10UF,20V	TK1424	20MC100M-TER
A12A2C404	283-5004-00			CAP,FXD,CER DI:0.1UF,10%,25V	80009	283-5004-00

Component No.	Tektronix Part No.	Serial/Assembly No. Effective	Dscont	Name & Description	Mfr. Code	Mfr. Part No.
A12A2C407	283-5004-00			CAP,FXD,CER DI:0.1UF,10%,25V	80009	283-5004-00
A12A2C412	283-5004-00			CAP,FXD,CER DI:0.1UF,10%,25V	80009	283-5004-00
A12A2C413	283-5004-00			CAP,FXD,CER DI:0.1UF,10%,25V	80009	283-5004-00
A12A2C414	283-5002-00			CAP,FXD,CER DI:1000PF,10%,50V	80009	283-5002-00
A12A2C422	283-5004-00			CAP,FXD,CER DI:0.1UF,10%,25V	80009	283-5004-00
A12A2C431	283-5002-00			CAP,FXD,CER DI:1000PF,10%,50V	80009	283-5002-00
A12A2C500	283-5004-00			CAP,FXD,CER DI:0.1UF,10%,25V	80009	283-5004-00
A12A2C510	283-5004-00			CAP,FXD,CER DI:0.1UF,10%,25V	80009	283-5004-00
A12A2C512	283-5006-00			CAP,FXD,CER DI:5PF,+/- 0.25PF,50V	54583	C3216C0G1H050C
A12A2C520	283-5004-00			CAP,FXD,CER DI:0.1UF,10%,25V	80009	283-5004-00
A12A2C521	283-5005-00			CAP,FXD,CER DI:4PF,+/- 0.25PF,50V	54583	C3216C0G1H040C
A12A2C523	283-5022-00			CAP,FXD,CER DI:47PF,5%,50V	54583	
A12A2C532	283-5002-00			CAP,FXD,CER DI:1000PF,10%,50V	80009	283-5002-00
A12A2C533	283-5001-00			CAP,FXD,CER DI:100PF,5%,50V	80009	283-5001-00
A12A2C611	281-0165-00			CAP,VAR,AIR DI:0.8-10PF,250V	80009	281-0165-00
A12A2C630	290-5002-00			CAP,FXD,ELCTLT:10UF,20V	TK1424	20MC100M-TER
A12A2C631	283-5001-00			CAP,FXD,CER DI:100PF,5%,50V	80009	283-5001-00
A12A2CR511	152-5010-00			DIODE,SIG:,VVC;30V,29PF,C3/25=5.75;MMBV109L ,SOT-23,8MM TR	80009	152-5010-00
A12A2L230	108-5030-00			COIL,RF:FXD,100NH, +/- 10 %,Q=25,SRF 950 MH Z,DCR 0.56 OHM, I	80009	108-5030-00
A12A2L232	108-5004-00			COIL,RF:	80009	108-5004-00
A12A2L415	108-5000-00			COIL,RF:	80009	108-5000-00
A12A2L610	108-1325-00			COIL,RF:100NH,6.75 TURNS,#16 WIRE,0.5 IN LO NG,ONE LEAD BENT 90DEGREES	80009	108-1325-00
A12A2Q101	151-5001-00			TRANSISTOR,SIG:BIPOLAR,NPN;40V,200MA,300MHZ ,AMPLIFIER;MMBT3904L,TO-236/SOT-23,8MM T&R	80009	151-5001-00
A12A2Q213	151-5011-00			TRANSISTOR,SIG:BIPOLAR,NPN;12V,50MA,900MHZ, AMPLIFIER;MMBR5179L,TO-236/SOT-23,8MM T&R	80009	151-5011-00
A12A2Q316	151-5011-00			TRANSISTOR,SIG:BIPOLAR,NPN;12V,50MA,900MHZ, AMPLIFIER;MMBR5179L,TO-236/SOT-23,8MM T&R	80009	151-5011-00
A12A2Q400	151-5011-00			TRANSISTOR,SIG:BIPOLAR,NPN;12V,50MA,900MHZ, AMPLIFIER;MMBR5179L,TO-236/SOT-23,8MM T&R	80009	151-5011-00
A12A2Q410	151-5011-00			TRANSISTOR,SIG:BIPOLAR,NPN;12V,50MA,900MHZ, AMPLIFIER;MMBR5179L,TO-236/SOT-23,8MM T&R	80009	151-5011-00
A12A2Q425	151-5000-00			TRANSISTOR,SIG:BIPOLAR,PNP;40V,200MA,250MHZ ,AMPLIFIER;MMBT3906L,TO-236/SOT-23,8MM T&R	04713	MMBT3906LT1
A12A2Q522	151-5001-00			TRANSISTOR,SIG:BIPOLAR,NPN;40V,200MA,300MHZ ,AMPLIFIER;MMBT3904L,TO-236/SOT-23,8MM T&R	80009	151-5001-00
A12A2R3	317-0101-00			RES,FXD,CMPSN:100 OHM,5%,0.125W	80009	317-0101-00
A12A2R102	321-5030-00			RES,FXD:METAL FILM;10.0K OHM,1%,0.125W,TC=1 00 PPM;1206,T&R	80009	321-5030-00
A12A2R121	321-5017-00			RES,FXD:METAL FILM;825 OHM,1%,0.125W,TC=100 PPM;1206,T&R	80009	321-5017-00
A12A2R123	321-5023-00			RES,FXD:METAL FILM;2.74K OHM,1%,0.125W,TC=1 00 PPM;1206,T&R	80009	321-5023-00
A12A2R130	321-5006-00			RES,FXD:METAL FILM;100 OHM,1%,0.125W,TC=100 PPM;1206,T&R	80009	321-5006-00
A12A2R131	321-5045-00			RES,FXD:METAL FILM;68.1 OHM,1%,0.125W,TC=10 0 PPM;1206,T&R	80009	321-5045-00
A12A2R132	321-5006-00			RES,FXD:METAL FILM;100 OHM,1%,0.125W,TC=100 PPM;1206,T&R	80009	321-5006-00
A12A2R201	321-5013-00			RES,FXD:METAL FILM;392 OHM,1%,0.125W,TC=100 PPM;1206,T&R	80009	321-5013-00
A12A2R202	321-5013-00			RES,FXD:METAL FILM;392 OHM,1%,0.125W,TC=100 PPM;1206,T&R	80009	321-5013-00
A12A2R203	321-5015-00			RES,FXD:METAL FILM;562 OHM,1%,0.125W,TC=100 PPM;1206,T&R	80009	321-5015-00

Component No.	Tektronix Part No.	Serial/Assembly No. Effective	Dscont	Name & Description	Mfr. Code	Mfr. Part No.
A12A2R210	321-5016-00			RES,FXD:METAL FILM;681 OHM,1%,0.125W,TC=100 PPM;1206,T&R	01121	BCK6810FT
A12A2R211	321-5016-00			RES,FXD:METAL FILM;681 OHM,1%,0.125W,TC=100 PPM;1206,T&R	01121	BCK6810FT
A12A2R220	321-5042-00			RES,FXD:METAL FILM;39.2 OHM,1%,0.125W,TC=10 0 PPM;1206,T&R	80009	321-5042-00
A12A2R221	321-5002-00			RES,FXD:METAL FILM;15 OHM,1%,0.125W,TC=100 PPM;1206,T&R	57668	MCR18EZHFW 15E0
A12A2R223	321-5006-00			RES,FXD:METAL FILM;100 OHM,1%,0.125W,TC=100 PPM;1206,T&R	80009	321-5006-00
A12A2R301	321-5015-00			RES,FXD:METAL FILM;562 OHM,1%,0.125W,TC=100 PPM;1206,T&R	80009	321-5015-00
A12A2R311	321-5000-00			RES,FXD:METAL FILM;10 OHM,1%,0.125W,TC=100 PPM;1206,T&R	57668	MCR18EZHFW10E
A12A2R312	321-5000-00			RES,FXD:METAL FILM;10 OHM,1%,0.125W,TC=100 PPM;1206,T&R	57668	MCR18EZHFW10E
A12A2R313	321-5010-00			RES,FXD:METAL FILM;221 OHM,1%,0.125W,TC=100 PPM;1206,T&R	80009	321-5010-00
A12A2R314	321-5018-00			RES,FXD:METAL FILM;1.0K OHM,1%,0.125W,TC=10 0 PPM;1206,T&R	80009	321-5018-00
A12A2R315	321-5042-00			RES,FXD:METAL FILM;39.2 OHM,1%,0.125W,TC=10 0 PPM;1206,T&R	80009	321-5042-00
A12A2R322	321-5006-00			RES,FXD:METAL FILM;100 OHM,1%,0.125W,TC=100 PPM;1206,T&R	80009	321-5006-00
A12A2R330	321-5043-00			RES,FXD:METAL FILM;47.5 OHM,1%,0.125W,TC=10 0 PPM;1206,T&R	80009	321-5043-00
A12A2R401	321-5019-00			RES,FXD:METAL FILM;1.21K OHM,1%,0.125W,TC=1 00 PPM;1206,T&R	80009	321-5019-00
A12A2R402	321-5028-00			RES,FXD:METAL FILM;6.81K OHM,1%,0.125W,TC=1 00 PPM;1206,T&R	80009	321-5028-00
A12A2R403	321-5043-00			RES,FXD:METAL FILM;47.5 OHM,1%,0.125W,TC=10 0 PPM;1206,T&R	80009	321-5043-00
A12A2R405	321-5043-00			RES,FXD:METAL FILM;47.5 OHM,1%,0.125W,TC=10 0 PPM;1206,T&R	80009	321-5043-00
A12A2R406	321-5000-00			RES,FXD:METAL FILM;10 OHM,1%,0.125W,TC=100 PPM;1206,T&R	57668	MCR18EZHFW10E
A12A2R411	321-5018-00			RES,FXD:METAL FILM;1.0K OHM,1%,0.125W,TC=10 0 PPM;1206,T&R	80009	321-5018-00
A12A2R416	321-5008-00			RES,FXD:METAL FILM;150 OHM,1%,0.125W,TC=100 PPM;1206,T&R	80009	321-5008-00
A12A2R420	321-5043-00			RES,FXD:METAL FILM;47.5 OHM,1%,0.125W,TC=10 0 PPM;1206,T&R	80009	321-5043-00
A12A2R421	321-5011-00			RES,FXD:METAL FILM;274 OHM,1%,0.125W,TC=100 PPM;1206,T&R	80009	321-5011-00
A12A2R423	321-5019-00			RES,FXD:METAL FILM;1.21K OHM,1%,0.125W,TC=1 00 PPM;1206,T&R	80009	321-5019-00
A12A2R424	321-5011-00			RES,FXD:METAL FILM;274 OHM,1%,0.125W,TC=100 PPM;1206,T&R	80009	321-5011-00
A12A2R430	321-5004-00			RES,FXD:METAL FILM;22.1 OHM,1%,0.125W,TC=10 0 PPM;1206,T&R	80009	321-5004-00
A12A2R432	321-5024-00			RES,FXD:METAL FILM;3.32K OHM,1%,0.125W,TC=1 00 PPM;1206,T&R	80009	321-5024-00
A12A2R433	321-5018-00			RES,FXD:METAL FILM;1.0K OHM,1%,0.125W,TC=10 0 PPM;1206,T&R	80009	321-5018-00
A12A2R434	321-5018-00			RES,FXD:METAL FILM;1.0K OHM,1%,0.125W,TC=10 0 PPM;1206,T&R	80009	321-5018-00
A12A2R524	321-5019-00			RES,FXD:METAL FILM;1.21K OHM,1%,0.125W,TC=1 00 PPM;1206,T&R	80009	321-5019-00

Component No.	Tektronix Part No.	Serial/Assembly No. Effective	Dscont	Name & Description	Mfr. Code	Mfr. Part No.
A12A2R530	321-5050-00			RES,FXD:METAL FILM;33.2 OHM,1%,0.125W,TC=10 0 PPM;1206,T&R	57668	MCR18FWEA33E2
A12A2R531	321-5024-00			RES,FXD:METAL FILM;3.32K OHM,1%,0.125W,TC=1 00 PPM;1206,T&R	80009	321-5024-00
A12A2R630	317-0101-00			RES,FXD,CMPSN:100 OHM,5%,0.125W	80009	317-0101-00
A12A2T200	120-0318-00			XFMR,TOROID:	TK1345	120-0318-00
A12A2U122	156-1161-00			IC,LINEAR:BIPOLAR,VOLTAGE REGULATOR;POSITIV E,ADJUSTABLE,1.5A,4%;LM317T,TO-220	04713	LM317T
A12A2U300	156-5221-00			IC,DIGITAL:ECL,FLIP FLOP;DUAL D-TYPE;10H131 ,PLCC20,TUBE	80009	156-5221-00
A12A2U320	119-5001-00			MIXER,RING:+7DBM LO,SMD	80009	119-5001-00
A12A2U435	156-5095-01			IC,LINEAR:BIPOLAR,OP-AMP;LOW NOISE,HIGH OUT PUT DRIVE;NE5534D,SO8.150,12MM T&R	80009	156-5095-01
A12A3	----- -----			(PART OF A12) LOW FREQUENCY		
A12A3C100	290-5003-00			CAP,FXD,ELCTLT:47UF,20%,10V	80009	290-5003-00
A12A3C110	290-5002-00			CAP,FXD,ELCTLT:10UF,20V	TK1424	20MC100M-TER
A12A3C122	283-5004-00			CAP,FXD,CER DI:0.1UF,10%,25V	80009	283-5004-00
A12A3C124	283-5004-00			CAP,FXD,CER DI:0.1UF,10%,25V	80009	283-5004-00
A12A3C130	283-5004-00			CAP,FXD,CER DI:0.1UF,10%,25V	80009	283-5004-00
A12A3C211	283-5004-00			CAP,FXD,CER DI:0.1UF,10%,25V	80009	283-5004-00
A12A3C220	283-5004-00			CAP,FXD,CER DI:0.1UF,10%,25V	80009	283-5004-00
A12A3C224	283-5004-00			CAP,FXD,CER DI:0.1UF,10%,25V	80009	283-5004-00
A12A3C300	283-5014-00			CAP,FXD,CER DI:330PF,5%,50V	80009	283-5014-00
A12A3C303	283-5003-00			CAP,FXD,CER DI:0.01UF,10%,50V	80009	283-5003-00
A12A3C304	283-5004-00			CAP,FXD,CER DI:0.1UF,10%,25V	80009	283-5004-00
A12A3C311	283-5004-00			CAP,FXD,CER DI:0.1UF,10%,25V	80009	283-5004-00
A12A3C316	283-5004-00			CAP,FXD,CER DI:0.1UF,10%,25V	80009	283-5004-00
A12A3C400	283-5001-00			CAP,FXD,CER DI:100PF,5%,50V	80009	283-5001-00
A12A3C412	283-5004-00			CAP,FXD,CER DI:0.1UF,10%,25V	80009	283-5004-00
A12A3C420	290-5003-00			CAP,FXD,ELCTLT:47UF,20%,10V	80009	290-5003-00
A12A3C421	283-5004-00			CAP,FXD,CER DI:0.1UF,10%,25V	80009	283-5004-00
A12A3C431	283-5004-00			CAP,FXD,CER DI:0.1UF,10%,25V	80009	283-5004-00
A12A3C500	283-5001-00			CAP,FXD,CER DI:100PF,5%,50V	80009	283-5001-00
A12A3C513	283-5004-00			CAP,FXD,CER DI:0.1UF,10%,25V	80009	283-5004-00
A12A3C515	283-5004-00			CAP,FXD,CER DI:0.1UF,10%,25V	80009	283-5004-00
A12A3C520	283-5004-00			CAP,FXD,CER DI:0.1UF,10%,25V	80009	283-5004-00
A12A3C521	290-5003-00			CAP,FXD,ELCTLT:47UF,20%,10V	80009	290-5003-00
A12A3C522	290-5003-00			CAP,FXD,ELCTLT:47UF,20%,10V	80009	290-5003-00
A12A3C523	290-5003-00			CAP,FXD,ELCTLT:47UF,20%,10V	80009	290-5003-00
A12A3C530	283-5004-00			CAP,FXD,CER DI:0.1UF,10%,25V	80009	283-5004-00
A12A3C531	283-5004-00			CAP,FXD,CER DI:0.1UF,10%,25V	80009	283-5004-00
A12A3C533	283-5001-00			CAP,FXD,CER DI:100PF,5%,50V	80009	283-5001-00
A12A3C542	283-5003-00			CAP,FXD,CER DI:0.01UF,10%,50V	80009	283-5003-00
A12A3CR216	152-0842-00			DIODE,SIG:SCHTKY,;COM-ANODE,20V,410MV,1.3PF ;HSMS-2812,SOT-23,T&R	04713	SRV-V-017
A12A3CR413	152-0842-00			DIODE,SIG:SCHTKY,;COM-ANODE,20V,410MV,1.3PF ;HSMS-2812,SOT-23,T&R	04713	SRV-V-017
A12A3CR532	152-0578-00			SEMICOND DVC,DI:VVC,SI,22-155PF,DO-7	50101	V34-4202
A12A3CR540	152-0578-00			SEMICOND DVC,DI:VVC,SI,22-155PF,DO-7	50101	V34-4202
A12A3E411	276-0532-00			SHLD BEAD,ELEK:FERRITE	80009	276-0532-00
A12A3E511	276-0532-00			SHLD BEAD,ELEK:FERRITE	80009	276-0532-00
A12A3E514	276-0532-00			SHLD BEAD,ELEK:FERRITE	80009	276-0532-00
A12A3L200	108-5018-00			COIL,RF:FXD,4.7UH,20%, Q=50, SRF 45 MHZ, DC R 1.0 OHM, I MAX	80009	108-5018-00
A12A3L534	108-1042-00			COIL,RF:FXD,4.7UH 8% TOROID	80009	108-1042-00
A12A3Q213	151-5000-00			TRANSISTOR,SIG:BIPOLAR,PNP;40V,200MA,250MHZ ,AMPLIFIER;MMBT3906L,TO-236/SOT-23,8MM T&R	04713	MMBT3906LT1
A12A3Q215	151-5000-00			TRANSISTOR,SIG:BIPOLAR,PNP;40V,200MA,250MHZ ,AMPLIFIER;MMBT3906L,TO-236/SOT-23,8MM T&R	04713	MMBT3906LT1

Component No.	Tektronix Part No.	Serial/Assembly No. Effective	Dscont	Name & Description	Mfr. Code	Mfr. Part No.
A12A3Q223	151-5000-00			TRANSISTOR,SIG:BIPOLAR,PNP;40V,200MA,250MHZ ,AMPLIFIER;MMBT3906L,TO-236/SOT-23,8MM T&R	04713	MMBT3906LT1
A12A3Q310	151-5001-00			TRANSISTOR,SIG:BIPOLAR,NPN;40V,200MA,300MHZ ,AMPLIFIER;MMBT3904L,TO-236/SOT-23,8MM T&R	80009	151-5001-00
A12A3Q312	151-5001-00			TRANSISTOR,SIG:BIPOLAR,NPN;40V,200MA,300MHZ ,AMPLIFIER;MMBT3904L,TO-236/SOT-23,8MM T&R	80009	151-5001-00
A12A3Q422	151-5001-00			TRANSISTOR,SIG:BIPOLAR,NPN;40V,200MA,300MHZ ,AMPLIFIER;MMBT3904L,TO-236/SOT-23,8MM T&R	80009	151-5001-00
A12A3Q426	151-5001-00			TRANSISTOR,SIG:BIPOLAR,NPN;40V,200MA,300MHZ ,AMPLIFIER;MMBT3904L,TO-236/SOT-23,8MM T&R	80009	151-5001-00
A12A3R111	321-0932-03			RES,FXD,FILM:2.5K OHM,0.25%,0.125W,TC=T2	2M627	CRA18CY2.5KOHM
A12A3R121	321-5004-00			RES,FXD:METAL FILM;22.1 OHM,1%,0.125W,TC=10 0 PPM;1206,T&R	80009	321-5004-00
A12A3R125	321-0168-02			RES,FXD,FILM:549 OHM,0.5%,0.125W,TC=T2	19701	5033RC549R0D
A12A3R126	321-5030-00			RES,FXD:METAL FILM;10.0K OHM,1%,0.125W,TC=1 00 PPM;1206,T&R	80009	321-5030-00
A12A3R201	321-5008-00			RES,FXD:METAL FILM;150 OHM,1%,0.125W,TC=100 PPM;1206,T&R	80009	321-5008-00
A12A3R210	321-5043-00			RES,FXD:METAL FILM;47.5 OHM,1%,0.125W,TC=10 0 PPM;1206,T&R	80009	321-5043-00
A12A3R212	321-5004-00			RES,FXD:METAL FILM;22.1 OHM,1%,0.125W,TC=10 0 PPM;1206,T&R	80009	321-5004-00
A12A3R214	321-5043-00			RES,FXD:METAL FILM;47.5 OHM,1%,0.125W,TC=10 0 PPM;1206,T&R	80009	321-5043-00
A12A3R221	321-5019-00			RES,FXD:METAL FILM;1.21K OHM,1%,0.125W,TC=1 00 PPM;1206,T&R	80009	321-5019-00
A12A3R222	321-5004-00			RES,FXD:METAL FILM;22.1 OHM,1%,0.125W,TC=10 0 PPM;1206,T&R	80009	321-5004-00
A12A3R230	321-5025-00			RES,FXD:METAL FILM;3.92K OHM,1%,0.125W,TC=1 00 PPM;1206,T&R	80009	321-5025-00
A12A3R241	321-5013-00			RES,FXD:METAL FILM;392 OHM,1%,0.125W,TC=100 PPM;1206,T&R	80009	321-5013-00
A12A3R301	321-5015-00			RES,FXD:METAL FILM;562 OHM,1%,0.125W,TC=100 PPM;1206,T&R	80009	321-5015-00
A12A3R302	321-5008-00			RES,FXD:METAL FILM;150 OHM,1%,0.125W,TC=100 PPM;1206,T&R	80009	321-5008-00
A12A3R313	321-5018-00			RES,FXD:METAL FILM;1.0K OHM,1%,0.125W,TC=10 0 PPM;1206,T&R	80009	321-5018-00
A12A3R315	321-5018-00			RES,FXD:METAL FILM;1.0K OHM,1%,0.125W,TC=10 0 PPM;1206,T&R	80009	321-5018-00
A12A3R423	321-5017-00			RES,FXD:METAL FILM;825 OHM,1%,0.125W,TC=100 PPM;1206,T&R	80009	321-5017-00
A12A3R424	321-5017-00			RES,FXD:METAL FILM;825 OHM,1%,0.125W,TC=100 PPM;1206,T&R	80009	321-5017-00
A12A3R425	321-5004-00			RES,FXD:METAL FILM;22.1 OHM,1%,0.125W,TC=10 0 PPM;1206,T&R	80009	321-5004-00
A12A3R501	321-5018-00			RES,FXD:METAL FILM;1.0K OHM,1%,0.125W,TC=10 0 PPM;1206,T&R	80009	321-5018-00
A12A3R502	321-5018-00			RES,FXD:METAL FILM;1.0K OHM,1%,0.125W,TC=10 0 PPM;1206,T&R	80009	321-5018-00
A12A3R516	321-5016-00			RES,FXD:METAL FILM;681 OHM,1%,0.125W,TC=100 PPM;1206,T&R	01121	BCK6810FT
A12A3R517	321-5004-00			RES,FXD:METAL FILM;22.1 OHM,1%,0.125W,TC=10 0 PPM;1206,T&R	80009	321-5004-00
A12A3R541	321-5018-00			RES,FXD:METAL FILM;1.0K OHM,1%,0.125W,TC=10 0 PPM;1206,T&R	80009	321-5018-00
A12A3R543	321-5000-00			RES,FXD:METAL FILM;10 OHM,1%,0.125W,TC=100 PPM;1206,T&R	57668	MCR18EZHFW10E

Component No.	Tektronix Part No.	Serial/Assembly No. Effective	Dscont	Name & Description	Mfr. Code	Mfr. Part No.
A12A3T430	120-1790-00			TRANSFORMER,RF:2.30UH,24:1:1 RATIO,W/HOLDER ,CORE 276-0700-00	TK1345	120-1790-00
A12A3U123	156-5082-01			IC,LINEAR:BIPOLAR,OP-AMP;LOW OFFSET;OP07CD, SO8.150,16MM T&R	80009	156-5082-01
A12A3U240	156-5038-00			IC,DIGITAL:LSTTL,MUX;DUAL 4-TO-1 DATA SELEC TOR;74LS153,SO16.150,TUBE	80009	156-5038-00
A12A3U410	156-5074-00			IC,DIGITAL:HCMOS,FLIP FLOP;DUAL D-TYPE;74HC 74,SO14.150,TUBE	80009	156-5074-00
A12A3U510	156-5098-00			IC,DIGITAL:HCTCMOS,GATE;QUAD 2-INPUT NAND;7 4HCT00,SO14.150,TUBE	80009	156-5098-00
A12A3U512	156-5074-00			IC,DIGITAL:HCMOS,FLIP FLOP;DUAL D-TYPE;74HC 74,SO14.150,TUBE	80009	156-5074-00
A13	670-9475-03	B010100	B010989	CIRCUIT BD ASSY:VR W/SMD	80009	670-9475-03
A13	670-9475-04	B010990		CIRCUIT BD ASSY:VARIABLE RESOLUTION	80009	670-9475-04
A13C103	283-5004-00			CAP,FXD,CER DI:0.1UF,10%,25V	80009	283-5004-00
A13C104	283-5004-00			CAP,FXD,CER DI:0.1UF,10%,25V	80009	283-5004-00
A13C105	283-5004-00			CAP,FXD,CER DI:0.1UF,10%,25V	80009	283-5004-00
A13C106	283-5004-00			CAP,FXD,CER DI:0.1UF,10%,25V	80009	283-5004-00
A13C110	283-5004-00			CAP,FXD,CER DI:0.1UF,10%,25V	80009	283-5004-00
A13C133	283-5004-00			CAP,FXD,CER DI:0.1UF,10%,25V	80009	283-5004-00
A13C135	283-5004-00			CAP,FXD,CER DI:0.1UF,10%,25V	80009	283-5004-00
A13C141	283-5004-00			CAP,FXD,CER DI:0.1UF,10%,25V	80009	283-5004-00
A13C147	283-5004-00			CAP,FXD,CER DI:0.1UF,10%,25V	80009	283-5004-00
A13C153	283-5004-00			CAP,FXD,CER DI:0.1UF,10%,25V	80009	283-5004-00
A13C154	283-5004-00			CAP,FXD,CER DI:0.1UF,10%,25V	80009	283-5004-00
A13C164	283-5004-00			CAP,FXD,CER DI:0.1UF,10%,25V	80009	283-5004-00
A13C165	283-5004-00			CAP,FXD,CER DI:0.1UF,10%,25V	80009	283-5004-00
A13C166	283-5004-00			CAP,FXD,CER DI:0.1UF,10%,25V	80009	283-5004-00
A13C170	283-5004-00			CAP,FXD,CER DI:0.1UF,10%,25V	80009	283-5004-00
A13C171	283-5004-00			CAP,FXD,CER DI:0.1UF,10%,25V	80009	283-5004-00
A13C172	283-5004-00			CAP,FXD,CER DI:0.1UF,10%,25V	80009	283-5004-00
A13C173	283-5003-00			CAP,FXD,CER DI:0.01UF,10%,50V	80009	283-5003-00
A13C182	283-5004-00			CAP,FXD,CER DI:0.1UF,10%,25V	80009	283-5004-00
A13C183	283-5004-00			CAP,FXD,CER DI:0.1UF,10%,25V	80009	283-5004-00
A13C187	283-5004-00			CAP,FXD,CER DI:0.1UF,10%,25V	80009	283-5004-00
A13C191	283-5004-00			CAP,FXD,CER DI:0.1UF,10%,25V	80009	283-5004-00
A13C201	283-5003-00			CAP,FXD,CER DI:0.01UF,10%,50V	80009	283-5003-00
A13C205	283-5004-00			CAP,FXD,CER DI:0.1UF,10%,25V	80009	283-5004-00
A13C206	283-5004-00			CAP,FXD,CER DI:0.1UF,10%,25V	80009	283-5004-00
A13C210	283-5004-00			CAP,FXD,CER DI:0.1UF,10%,25V	80009	283-5004-00
A13C211	281-0267-00			CAP,VAR,CERAMIC:6-50PF,50V	80009	281-0267-00
A13C212	283-5022-00			CAP,FXD,CER DI:47PF,5%,50V	54583	
A13C214	283-5022-00			CAP,FXD,CER DI:47PF,5%,50V	54583	
A13C220	281-0267-00			CAP,VAR,CERAMIC:6-50PF,50V	80009	281-0267-00
A13C221	283-5011-00			CAP,FXD,CER DI:33PF,5%,50V	95275	VJ1206A330JXA
A13C230	281-0267-00			CAP,VAR,CERAMIC:6-50PF,50V	80009	281-0267-00
A13C231	283-5022-00			CAP,FXD,CER DI:47PF,5%,50V	54583	
A13C232	283-5004-00			CAP,FXD,CER DI:0.1UF,10%,25V	80009	283-5004-00
A13C234	283-5022-00			CAP,FXD,CER DI:47PF,5%,50V	54583	
A13C236	283-5004-00			CAP,FXD,CER DI:0.1UF,10%,25V	80009	283-5004-00
A13C240	283-5004-00			CAP,FXD,CER DI:0.1UF,10%,25V	80009	283-5004-00
A13C241	283-5004-00			CAP,FXD,CER DI:0.1UF,10%,25V	80009	283-5004-00
A13C242	283-5004-00			CAP,FXD,CER DI:0.1UF,10%,25V	80009	283-5004-00
A13C254	283-5004-00			CAP,FXD,CER DI:0.1UF,10%,25V	80009	283-5004-00
A13C255	283-5004-00			CAP,FXD,CER DI:0.1UF,10%,25V	80009	283-5004-00
A13C261	283-5004-00			CAP,FXD,CER DI:0.1UF,10%,25V	80009	283-5004-00
A13C262	283-5004-00			CAP,FXD,CER DI:0.1UF,10%,25V	80009	283-5004-00
A13C263	283-5004-00			CAP,FXD,CER DI:0.1UF,10%,25V	80009	283-5004-00
A13C270	283-5004-00			CAP,FXD,CER DI:0.1UF,10%,25V	80009	283-5004-00

Component No.	Tektronix Part No.	Serial/Assembly No. Effective	Dscont	Name & Description	Mfr. Code	Mfr. Part No.
A13C271	283-5004-00			CAP,FXD,CER DI:0.1UF,10%,25V	80009	283-5004-00
A13C272	283-5004-00			CAP,FXD,CER DI:0.1UF,10%,25V	80009	283-5004-00
A13C280	283-5004-00			CAP,FXD,CER DI:0.1UF,10%,25V	80009	283-5004-00
A13C281	283-5004-00			CAP,FXD,CER DI:0.1UF,10%,25V	80009	283-5004-00
A13C282	283-5004-00			CAP,FXD,CER DI:0.1UF,10%,25V	80009	283-5004-00
A13C283	283-5004-00			CAP,FXD,CER DI:0.1UF,10%,25V	80009	283-5004-00
A13C290	283-5004-00			CAP,FXD,CER DI:0.1UF,10%,25V	80009	283-5004-00
A13C291	283-5004-00			CAP,FXD,CER DI:0.1UF,10%,25V	80009	283-5004-00
A13C292	283-5004-00			CAP,FXD,CER DI:0.1UF,10%,25V	80009	283-5004-00
A13C293	283-5004-00			CAP,FXD,CER DI:0.1UF,10%,25V	80009	283-5004-00
A13C294	283-0108-00	B010100	B010989	CAP,FXD,CER DI:220PF,10%,200V	04222	SR152A221KAA
A13C294	283-5025-00	B010990		CAP,FXD,CER DI:220PF,5%,50V	80009	283-5025-00
A13C296	283-0108-00			CAP,FXD,CER DI:220PF,10%,200V	04222	SR152A221KAA
A13C302	283-5004-00			CAP,FXD,CER DI:0.1UF,10%,25V	80009	283-5004-00
A13C311	283-5004-00			CAP,FXD,CER DI:0.1UF,10%,25V	80009	283-5004-00
A13C314	281-0267-00			CAP,VAR,CERAMIC:6-50PF,50V	80009	281-0267-00
A13C315	283-5000-00			CAP,FXD,CER DI:10PF,5%,50V	80009	283-5000-00
A13C317	283-5009-00			CAP,FXD,CER DI:15PF,5%,50V	54583	C3216C0G1H150J
A13C319	283-5004-00			CAP,FXD,CER DI:0.1UF,10%,25V	80009	283-5004-00
A13C322	283-5004-00			CAP,FXD,CER DI:0.1UF,10%,25V	80009	283-5004-00
A13C325	283-5004-00			CAP,FXD,CER DI:0.1UF,10%,25V	80009	283-5004-00
A13C329	283-5004-00			CAP,FXD,CER DI:0.1UF,10%,25V	80009	283-5004-00
A13C333	283-5004-00			CAP,FXD,CER DI:0.1UF,10%,25V	80009	283-5004-00
A13C334	283-5004-00			CAP,FXD,CER DI:0.1UF,10%,25V	80009	283-5004-00
A13C342	283-5004-00			CAP,FXD,CER DI:0.1UF,10%,25V	80009	283-5004-00
A13C343	283-5004-00			CAP,FXD,CER DI:0.1UF,10%,25V	80009	283-5004-00
A13C344	283-5004-00			CAP,FXD,CER DI:0.1UF,10%,25V	80009	283-5004-00
A13C345	283-5004-00			CAP,FXD,CER DI:0.1UF,10%,25V	80009	283-5004-00
A13C350	283-5004-00			CAP,FXD,CER DI:0.1UF,10%,25V	80009	283-5004-00
A13C351	283-5004-00			CAP,FXD,CER DI:0.1UF,10%,25V	80009	283-5004-00
A13C352	283-5004-00			CAP,FXD,CER DI:0.1UF,10%,25V	80009	283-5004-00
A13C353	283-5004-00			CAP,FXD,CER DI:0.1UF,10%,25V	80009	283-5004-00
A13C354	283-5004-00			CAP,FXD,CER DI:0.1UF,10%,25V	80009	283-5004-00
A13C360	283-5004-00			CAP,FXD,CER DI:0.1UF,10%,25V	80009	283-5004-00
A13C361	283-5004-00			CAP,FXD,CER DI:0.1UF,10%,25V	80009	283-5004-00
A13C362	283-5004-00			CAP,FXD,CER DI:0.1UF,10%,25V	80009	283-5004-00
A13C370	283-5004-00			CAP,FXD,CER DI:0.1UF,10%,25V	80009	283-5004-00
A13C371	283-5004-00			CAP,FXD,CER DI:0.1UF,10%,25V	80009	283-5004-00
A13C372	283-5004-00			CAP,FXD,CER DI:0.1UF,10%,25V	80009	283-5004-00
A13C373	283-5004-00			CAP,FXD,CER DI:0.1UF,10%,25V	80009	283-5004-00
A13C380	283-5004-00			CAP,FXD,CER DI:0.1UF,10%,25V	80009	283-5004-00
A13C381	283-5004-00			CAP,FXD,CER DI:0.1UF,10%,25V	80009	283-5004-00
A13C382	283-5004-00			CAP,FXD,CER DI:0.1UF,10%,25V	80009	283-5004-00
A13C390	283-5004-00			CAP,FXD,CER DI:0.1UF,10%,25V	80009	283-5004-00
A13C392	283-5004-00			CAP,FXD,CER DI:0.1UF,10%,25V	80009	283-5004-00
A13C399	283-5004-00			CAP,FXD,CER DI:0.1UF,10%,25V	80009	283-5004-00
A13C401	283-5004-00			CAP,FXD,CER DI:0.1UF,10%,25V	80009	283-5004-00
A13C402	283-5004-00			CAP,FXD,CER DI:0.1UF,10%,25V	80009	283-5004-00
A13C412	283-5022-00			CAP,FXD,CER DI:47PF,5%,50V	54583	
A13C413	283-5042-00			CAP,FXD,CER DI:27PF,5%,50V	80009	283-5042-00
A13C430	281-0267-00			CAP,VAR,CERAMIC:6-50PF,50V	80009	281-0267-00
A13C431	283-5022-00			CAP,FXD,CER DI:47PF,5%,50V	54583	
A13C433	283-5042-00			CAP,FXD,CER DI:27PF,5%,50V	80009	283-5042-00
A13C434	283-5009-00			CAP,FXD,CER DI:15PF,5%,50V	54583	C3216C0G1H150J
A13C435	283-5000-00			CAP,FXD,CER DI:10PF,5%,50V	80009	283-5000-00
A13C446	283-5004-00			CAP,FXD,CER DI:0.1UF,10%,25V	80009	283-5004-00
A13C447	283-5004-00			CAP,FXD,CER DI:0.1UF,10%,25V	80009	283-5004-00
A13C450	283-5001-00			CAP,FXD,CER DI:100PF,5%,50V	80009	283-5001-00
A13C451	283-5004-00			CAP,FXD,CER DI:0.1UF,10%,25V	80009	283-5004-00

Component No.	Tektronix Part No.	Serial/Assembly No. Effective	Dscont	Name & Description	Mfr. Code	Mfr. Part No.
A13C452	283-5004-00			CAP,FXD,CER DI:0.1UF,10%,25V	80009	283-5004-00
A13C453	283-5004-00			CAP,FXD,CER DI:0.1UF,10%,25V	80009	283-5004-00
A13C462	283-5004-00			CAP,FXD,CER DI:0.1UF,10%,25V	80009	283-5004-00
A13C463	283-5004-00			CAP,FXD,CER DI:0.1UF,10%,25V	80009	283-5004-00
A13C477	283-5004-00			CAP,FXD,CER DI:0.1UF,10%,25V	80009	283-5004-00
A13C480	283-5004-00			CAP,FXD,CER DI:0.1UF,10%,25V	80009	283-5004-00
A13C481	283-5004-00			CAP,FXD,CER DI:0.1UF,10%,25V	80009	283-5004-00
A13C482	283-5004-00			CAP,FXD,CER DI:0.1UF,10%,25V	80009	283-5004-00
A13C483	283-5004-00			CAP,FXD,CER DI:0.1UF,10%,25V	80009	283-5004-00
A13C495	283-5004-00			CAP,FXD,CER DI:0.1UF,10%,25V	80009	283-5004-00
A13C497	283-5004-00			CAP,FXD,CER DI:0.1UF,10%,25V	80009	283-5004-00
A13C500	283-5004-00			CAP,FXD,CER DI:0.1UF,10%,25V	80009	283-5004-00
A13C513	283-5004-00			CAP,FXD,CER DI:0.1UF,10%,25V	80009	283-5004-00
A13C514	283-5011-00			CAP,FXD,CER DI:33PF,5%,50V	95275	VJ1206A330JXA
A13C515	283-5004-00			CAP,FXD,CER DI:0.1UF,10%,25V	80009	283-5004-00
A13C516	283-5022-00			CAP,FXD,CER DI:47PF,5%,50V	54583	
A13C517	283-5022-00			CAP,FXD,CER DI:47PF,5%,50V	54583	
A13C518	283-5011-00			CAP,FXD,CER DI:33PF,5%,50V	95275	VJ1206A330JXA
A13C520	283-5003-00			CAP,FXD,CER DI:0.01UF,10%,50V	80009	283-5003-00
A13C521	283-5015-00			CAP,FXD,CER DI:3300PF,10%,50V	54583	
A13C522	283-5003-00			CAP,FXD,CER DI:0.01UF,10%,50V	80009	283-5003-00
A13C523	283-5000-00			CAP,FXD,CER DI:10PF,5%,50V	80009	283-5000-00
A13C524	283-5041-00			CAP,FXD,CER DI:7PF,+/-0.5PF,50V	54583	
A13C525	283-5000-00			CAP,FXD,CER DI:10PF,5%,50V	80009	283-5000-00
A13C526	283-5000-00			CAP,FXD,CER DI:10PF,5%,50V	80009	283-5000-00
A13C527	283-5022-00			CAP,FXD,CER DI:47PF,5%,50V	54583	
A13C528	283-5022-00			CAP,FXD,CER DI:47PF,5%,50V	54583	
A13C529	283-5011-00			CAP,FXD,CER DI:33PF,5%,50V	95275	VJ1206A330JXA
A13C532	283-5004-00			CAP,FXD,CER DI:0.1UF,10%,25V	80009	283-5004-00
A13C533	283-5011-00			CAP,FXD,CER DI:33PF,5%,50V	95275	VJ1206A330JXA
A13C534	283-5004-00			CAP,FXD,CER DI:0.1UF,10%,25V	80009	283-5004-00
A13C535	283-5004-00			CAP,FXD,CER DI:0.1UF,10%,25V	80009	283-5004-00
A13C542	283-5004-00			CAP,FXD,CER DI:0.1UF,10%,25V	80009	283-5004-00
A13C546	283-5004-00			CAP,FXD,CER DI:0.1UF,10%,25V	80009	283-5004-00
A13C549	283-5004-00			CAP,FXD,CER DI:0.1UF,10%,25V	80009	283-5004-00
A13C564	283-5004-00			CAP,FXD,CER DI:0.1UF,10%,25V	80009	283-5004-00
A13C565	283-5004-00			CAP,FXD,CER DI:0.1UF,10%,25V	80009	283-5004-00
A13C566	283-5004-00			CAP,FXD,CER DI:0.1UF,10%,25V	80009	283-5004-00
A13C576	283-5004-00			CAP,FXD,CER DI:0.1UF,10%,25V	80009	283-5004-00
A13C588	290-0944-00			CAP,FXD,ELCTLT:220UF,+50-20%,10V	55680	UVX1C221MPA
A13C590	283-5004-00			CAP,FXD,CER DI:0.1UF,10%,25V	80009	283-5004-00
A13C591	283-5004-00			CAP,FXD,CER DI:0.1UF,10%,25V	80009	283-5004-00
A13C600	283-5004-00			CAP,FXD,CER DI:0.1UF,10%,25V	80009	283-5004-00
A13C602	283-5004-00			CAP,FXD,CER DI:0.1UF,10%,25V	80009	283-5004-00
A13C607	283-5004-00			CAP,FXD,CER DI:0.1UF,10%,25V	80009	283-5004-00
A13C610	283-5000-00			CAP,FXD,CER DI:10PF,5%,50V	80009	283-5000-00
A13C611	281-0267-00			CAP,VAR,CERAMIC:6-50PF,50V	80009	281-0267-00
A13C612	281-0267-00			CAP,VAR,CERAMIC:6-50PF,50V	80009	281-0267-00
A13C613	283-5000-00			CAP,FXD,CER DI:10PF,5%,50V	80009	283-5000-00
A13C614	283-5041-00			CAP,FXD,CER DI:7PF,+/-0.5PF,50V	54583	
A13C615	283-5000-00			CAP,FXD,CER DI:10PF,5%,50V	80009	283-5000-00
A13C620	281-0267-00			CAP,VAR,CERAMIC:6-50PF,50V	80009	281-0267-00
A13C621	281-0267-00			CAP,VAR,CERAMIC:6-50PF,50V	80009	281-0267-00
A13C631	290-0944-00			CAP,FXD,ELCTLT:220UF,+50-20%,10V	55680	UVX1C221MPA
A13C642	283-5004-00			CAP,FXD,CER DI:0.1UF,10%,25V	80009	283-5004-00
A13C645	283-5004-00			CAP,FXD,CER DI:0.1UF,10%,25V	80009	283-5004-00
A13C648	283-5004-00			CAP,FXD,CER DI:0.1UF,10%,25V	80009	283-5004-00
A13C661	283-5004-00			CAP,FXD,CER DI:0.1UF,10%,25V	80009	283-5004-00
A13C673	283-5004-00			CAP,FXD,CER DI:0.1UF,10%,25V	80009	283-5004-00

Component No.	Tektronix Part No.	Serial/Assembly No. Effective	Dscont	Name & Description	Mfr. Code	Mfr. Part No.
A13C682	283-5004-00			CAP,FXD,CER DI:0.1UF,10%,25V	80009	283-5004-00
A13C683	283-5004-00			CAP,FXD,CER DI:0.1UF,10%,25V	80009	283-5004-00
A13C684	290-5000-00	B010100	B010989	CAP,FXD,ELCTLT:1UF,20%,50V	TK0900	S50V1MICROF
A13C684	290-5039-00	B010990		CAP,FXD,ALUM:10UF,20%,50V,6.3MM,SMD,16MM TA PE & REEL.	80009	290-5039-00
A13C689	283-5002-00			CAP,FXD,CER DI:1000PF,10%,50V	80009	283-5002-00
A13CR450	152-5004-00			DIODE,SIG:,ULTRA FAST;70V,0.15A,6NS,SER-PAI R;BAV99,SOT-23,8MM TR	25088	BAV99T
A13CR485	152-5043-00			SEMICOND DVC,DI:PIN,SI,100V,2.5 OHM,0.35PF, 0.35PF,SOT-23,HSMP-3802	80009	152-5043-00
A13CR584	152-5043-00			SEMICOND DVC,DI:PIN,SI,100V,2.5 OHM,0.35PF, 0.35PF,SOT-23,HSMP-3802	80009	152-5043-00
A13CR585	152-5043-00			SEMICOND DVC,DI:PIN,SI,100V,2.5 OHM,0.35PF, 0.35PF,SOT-23,HSMP-3802	80009	152-5043-00
A13J100	131-0951-00			CONN,RF JACK::	98291	051-051-0159-220
A13J150	131-0951-00			CONN,RF JACK::	98291	051-051-0159-220
A13J190	131-0951-00			CONN,RF JACK::	98291	051-051-0159-220
A13J620	131-0951-00			CONN,RF JACK::	98291	051-051-0159-220
A13J690	131-2920-00			CONN,HDR:PCB,;MALE,RTANG,2 X 5,0.1 CTR,0.31 8 MLG X 0.110 TAIL,0.238 H,30 GOLD;,,	80009	131-2920-00
A13L295	108-0735-00	B010100	B010989	COIL,RF:FIXED,584NH	80009	108-0735-00
A13L295	108-5005-00	B010990		COIL,RF:	80009	108-5005-00
A13L454	108-5003-00			COIL,RF:	54583	NL453232T-120K
A13L465	108-5003-00			COIL,RF:	54583	NL453232T-120K
A13L470	108-5003-00			COIL,RF:	54583	NL453232T-120K
A13L484	108-5003-00			COIL,RF:	54583	NL453232T-120K
A13L516	108-5027-00			COIL,RF:	80009	108-5027-00
A13L549	108-5027-00			COIL,RF:	80009	108-5027-00
A13L577	108-5003-00			COIL,RF:	54583	NL453232T-120K
A13L587	108-5003-00			COIL,RF:	54583	NL453232T-120K
A13L592	108-1262-00			COIL,RF:FXD,100UH,10%,Q=30,SRF 8.2MHZ,DCR 0 .23 OHM,I MAX 0.75ARADIAL LEAD	80009	108-1262-00
A13L593	108-1262-00			COIL,RF:FXD,100UH,10%,Q=30,SRF 8.2MHZ,DCR 0 .23 OHM,I MAX 0.75ARADIAL LEAD	80009	108-1262-00
A13L687	108-5003-00			COIL,RF:	54583	NL453232T-120K
A13L710	108-1326-00			COIL,RF:FXD, TOROID, 2.1UH, +/-10%, DCR 0.0 65 OHM, Q=150@10MHZ,PKG DIA 0.5 X 0.2	0JR03	108-1326-00
A13L730	108-1326-00			COIL,RF:FXD, TOROID, 2.1UH, +/-10%, DCR 0.0 65 OHM, Q=150@10MHZ,PKG DIA 0.5 X 0.2	0JR03	108-1326-00
A13L810	108-1326-00			COIL,RF:FXD, TOROID, 2.1UH, +/-10%, DCR 0.0 65 OHM, Q=150@10MHZ,PKG DIA 0.5 X 0.2	0JR03	108-1326-00
A13L830	108-1326-00			COIL,RF:FXD, TOROID, 2.1UH, +/-10%, DCR 0.0 65 OHM, Q=150@10MHZ,PKG DIA 0.5 X 0.2	0JR03	108-1326-00
A13L910	108-1326-00			COIL,RF:FXD, TOROID, 2.1UH, +/-10%, DCR 0.0 65 OHM, Q=150@10MHZ,PKG DIA 0.5 X 0.2	0JR03	108-1326-00
A13L911	108-1326-00			COIL,RF:FXD, TOROID, 2.1UH, +/-10%, DCR 0.0 65 OHM, Q=150@10MHZ,PKG DIA 0.5 X 0.2	0JR03	108-1326-00
A13L920	108-1326-00			COIL,RF:FXD, TOROID, 2.1UH, +/-10%, DCR 0.0 65 OHM, Q=150@10MHZ,PKG DIA 0.5 X 0.2	0JR03	108-1326-00
A13L921	108-1326-00			COIL,RF:FXD, TOROID, 2.1UH, +/-10%, DCR 0.0 65 OHM, Q=150@10MHZ,PKG DIA 0.5 X 0.2	0JR03	108-1326-00
A13Q116	151-5005-00			TRANSISTOR,SIG:BIPOLAR,PNP;20V,1.0A,60MHZ,A MPLIFIER;BCX69/BC869,SOT-89,12MM T/R	04713	BCX69T1
A13Q136	151-5004-00			TRANSISTOR,SIG:BIPOLAR,NPN;20V,1.0A,65MHZ,A MPLIFIER;BCX68/BC868,SOT-89,12MM T/R	04713	BCX68
A13Q144	151-5004-00			TRANSISTOR,SIG:BIPOLAR,NPN;20V,1.0A,65MHZ,A MPLIFIER;BCX68/BC868,SOT-89,12MM T/R	04713	BCX68
A13Q145	151-5005-00			TRANSISTOR,SIG:BIPOLAR,PNP;20V,1.0A,60MHZ,A MPLIFIER;BCX69/BC869,SOT-89,12MM T/R	04713	BCX69T1

Component No.	Tektronix Part No.	Serial/Assembly No. Effective	Dscont	Name & Description	Mfr. Code	Mfr. Part No.
A13Q202	151-5009-00			TRANSISTOR,SIG:BIPOLAR,NPN;25V,300MA,1.2GHZ ,AMPLIFIER;BFQ17,SOT-89,12MM T/R	80009	151-5009-00
A13Q215	151-5004-00			TRANSISTOR,SIG:BIPOLAR,NPN;20V,1.0A,65MHZ,A MPLIFIER;BCX68/BC868,SOT-89,12MM T/R	04713	BCX68
A13Q233	151-5005-00			TRANSISTOR,SIG:BIPOLAR,PNP;20V,1.0A,60MHZ,A MPLIFIER;BCX69/BC869,SOT-89,12MM T/R	04713	BCX69T1
A13Q246	151-5004-00			TRANSISTOR,SIG:BIPOLAR,NPN;20V,1.0A,65MHZ,A MPLIFIER;BCX68/BC868,SOT-89,12MM T/R	04713	BCX68
A13Q260	151-5009-00			TRANSISTOR,SIG:BIPOLAR,NPN;25V,300MA,1.2GHZ ,AMPLIFIER;BFQ17,SOT-89,12MM T/R	80009	151-5009-00
A13Q264	151-5009-00			TRANSISTOR,SIG:BIPOLAR,NPN;25V,300MA,1.2GHZ ,AMPLIFIER;BFQ17,SOT-89,12MM T/R	80009	151-5009-00
A13Q275	151-5009-00			TRANSISTOR,SIG:BIPOLAR,NPN;25V,300MA,1.2GHZ ,AMPLIFIER;BFQ17,SOT-89,12MM T/R	80009	151-5009-00
A13Q285	151-5009-00			TRANSISTOR,SIG:BIPOLAR,NPN;25V,300MA,1.2GHZ ,AMPLIFIER;BFQ17,SOT-89,12MM T/R	80009	151-5009-00
A13Q298	151-5009-00			TRANSISTOR,SIG:BIPOLAR,NPN;25V,300MA,1.2GHZ ,AMPLIFIER;BFQ17,SOT-89,12MM T/R	80009	151-5009-00
A13Q310	151-5005-00			TRANSISTOR,SIG:BIPOLAR,PNP;20V,1.0A,60MHZ,A MPLIFIER;BCX69/BC869,SOT-89,12MM T/R	04713	BCX69T1
A13Q312	151-5005-00			TRANSISTOR,SIG:BIPOLAR,PNP;20V,1.0A,60MHZ,A MPLIFIER;BCX69/BC869,SOT-89,12MM T/R	04713	BCX69T1
A13Q328	151-5004-00			TRANSISTOR,SIG:BIPOLAR,NPN;20V,1.0A,65MHZ,A MPLIFIER;BCX68/BC868,SOT-89,12MM T/R	04713	BCX68
A13Q331	151-5004-00			TRANSISTOR,SIG:BIPOLAR,NPN;20V,1.0A,65MHZ,A MPLIFIER;BCX68/BC868,SOT-89,12MM T/R	04713	BCX68
A13Q332	151-5005-00			TRANSISTOR,SIG:BIPOLAR,PNP;20V,1.0A,60MHZ,A MPLIFIER;BCX69/BC869,SOT-89,12MM T/R	04713	BCX69T1
A13Q340	151-5004-00			TRANSISTOR,SIG:BIPOLAR,NPN;20V,1.0A,65MHZ,A MPLIFIER;BCX68/BC868,SOT-89,12MM T/R	04713	BCX68
A13Q341	151-5016-00			TRANSISTOR,SIG:BIPOLAR,PNP;20V,30MA,600MHZ, AMPLIFIER;MMBTH81L,TO-236/SOT-23,8MM T&R	80009	151-5016-00
A13Q350	151-5001-00			TRANSISTOR,SIG:BIPOLAR,NPN;40V,200MA,300MHZ ,AMPLIFIER;MMBT3904L,TO-236/SOT-23,8MM T&R	80009	151-5001-00
A13Q351	151-5016-00			TRANSISTOR,SIG:BIPOLAR,PNP;20V,30MA,600MHZ, AMPLIFIER;MMBTH81L,TO-236/SOT-23,8MM T&R	80009	151-5016-00
A13Q352	151-5004-00			TRANSISTOR,SIG:BIPOLAR,NPN;20V,1.0A,65MHZ,A MPLIFIER;BCX68/BC868,SOT-89,12MM T/R	04713	BCX68
A13Q360	151-5004-00			TRANSISTOR,SIG:BIPOLAR,NPN;20V,1.0A,65MHZ,A MPLIFIER;BCX68/BC868,SOT-89,12MM T/R	04713	BCX68
A13Q370	151-5004-00			TRANSISTOR,SIG:BIPOLAR,NPN;20V,1.0A,65MHZ,A MPLIFIER;BCX68/BC868,SOT-89,12MM T/R	04713	BCX68
A13Q385	151-5004-00			TRANSISTOR,SIG:BIPOLAR,NPN;20V,1.0A,65MHZ,A MPLIFIER;BCX68/BC868,SOT-89,12MM T/R	04713	BCX68
A13Q411	151-5005-00			TRANSISTOR,SIG:BIPOLAR,PNP;20V,1.0A,60MHZ,A MPLIFIER;BCX69/BC869,SOT-89,12MM T/R	04713	BCX69T1
A13Q414	151-5004-00			TRANSISTOR,SIG:BIPOLAR,NPN;20V,1.0A,65MHZ,A MPLIFIER;BCX68/BC868,SOT-89,12MM T/R	04713	BCX68
A13Q440	151-5005-00			TRANSISTOR,SIG:BIPOLAR,PNP;20V,1.0A,60MHZ,A MPLIFIER;BCX69/BC869,SOT-89,12MM T/R	04713	BCX69T1
A13Q441	151-5001-00			TRANSISTOR,SIG:BIPOLAR,NPN;40V,200MA,300MHZ ,AMPLIFIER;MMBT3904L,TO-236/SOT-23,8MM T&R	80009	151-5001-00
A13Q442	151-5000-00			TRANSISTOR,SIG:BIPOLAR,PNP;40V,200MA,250MHZ ,AMPLIFIER;MMBT3906L,TO-236/SOT-23,8MM T&R	04713	MMBT3906LT1
A13Q460	151-5004-00			TRANSISTOR,SIG:BIPOLAR,NPN;20V,1.0A,65MHZ,A MPLIFIER;BCX68/BC868,SOT-89,12MM T/R	04713	BCX68
A13Q461	151-5004-00			TRANSISTOR,SIG:BIPOLAR,NPN;20V,1.0A,65MHZ,A MPLIFIER;BCX68/BC868,SOT-89,12MM T/R	04713	BCX68

Component No.	Tektronix Part No.	Serial/Assembly No. Effective	Dscont	Name & Description	Mfr. Code	Mfr. Part No.
A13Q476	151-5004-00			TRANSISTOR,SIG:BIPOLAR,NPN;20V,1.0A,65MHZ,A MPLIFIER;BCX68/BC868,SOT-89,12MM T/R	04713	BCX68
A13Q486	151-5004-00			TRANSISTOR,SIG:BIPOLAR,NPN;20V,1.0A,65MHZ,A MPLIFIER;BCX68/BC868,SOT-89,12MM T/R	04713	BCX68
A13Q490	151-5004-00			TRANSISTOR,SIG:BIPOLAR,NPN;20V,1.0A,65MHZ,A MPLIFIER;BCX68/BC868,SOT-89,12MM T/R	04713	BCX68
A13Q491	151-5004-00			TRANSISTOR,SIG:BIPOLAR,NPN;20V,1.0A,65MHZ,A MPLIFIER;BCX68/BC868,SOT-89,12MM T/R	04713	BCX68
A13Q504	151-5001-00			TRANSISTOR,SIG:BIPOLAR,NPN;40V,200MA,300MHZ ,AMPLIFIER;MMBT3904L,TO-236/SOT-23,8MM T&R	80009	151-5001-00
A13Q511	151-5004-00			TRANSISTOR,SIG:BIPOLAR,NPN;20V,1.0A,65MHZ,A MPLIFIER;BCX68/BC868,SOT-89,12MM T/R	04713	BCX68
A13Q536	151-5004-00			TRANSISTOR,SIG:BIPOLAR,NPN;20V,1.0A,65MHZ,A MPLIFIER;BCX68/BC868,SOT-89,12MM T/R	04713	BCX68
A13Q537	151-5005-00			TRANSISTOR,SIG:BIPOLAR,PNP;20V,1.0A,60MHZ,A MPLIFIER;BCX69/BC869,SOT-89,12MM T/R	04713	BCX69T1
A13Q543	151-5000-00			TRANSISTOR,SIG:BIPOLAR,PNP;40V,200MA,250MHZ ,AMPLIFIER;MMBT3906L,TO-236/SOT-23,8MM T&R	04713	MMBT3906LT1
A13Q547	151-5000-00			TRANSISTOR,SIG:BIPOLAR,PNP;40V,200MA,250MHZ ,AMPLIFIER;MMBT3906L,TO-236/SOT-23,8MM T&R	04713	MMBT3906LT1
A13Q586	151-5000-00			TRANSISTOR,SIG:BIPOLAR,PNP;40V,200MA,250MHZ ,AMPLIFIER;MMBT3906L,TO-236/SOT-23,8MM T&R	04713	MMBT3906LT1
A13Q603	151-5005-00			TRANSISTOR,SIG:BIPOLAR,PNP;20V,1.0A,60MHZ,A MPLIFIER;BCX69/BC869,SOT-89,12MM T/R	04713	BCX69T1
A13Q604	151-5004-00			TRANSISTOR,SIG:BIPOLAR,NPN;20V,1.0A,65MHZ,A MPLIFIER;BCX68/BC868,SOT-89,12MM T/R	04713	BCX68
A13Q643	151-5000-00			TRANSISTOR,SIG:BIPOLAR,PNP;40V,200MA,250MHZ ,AMPLIFIER;MMBT3906L,TO-236/SOT-23,8MM T&R	04713	MMBT3906LT1
A13Q649	151-5000-00			TRANSISTOR,SIG:BIPOLAR,PNP;40V,200MA,250MHZ ,AMPLIFIER;MMBT3906L,TO-236/SOT-23,8MM T&R	04713	MMBT3906LT1
A13R100	321-5014-00			RES,FXD:METAL FILM;475 OHM,1%,0.125W,TC=100 PPM;1206,T&R	80009	321-5014-00
A13R101	321-5014-00			RES,FXD:METAL FILM;475 OHM,1%,0.125W,TC=100 PPM;1206,T&R	80009	321-5014-00
A13R102	321-5000-00			RES,FXD:METAL FILM;10 OHM,1%,0.125W,TC=100 PPM;1206,T&R	57668	MCR18EZHFW10E
A13R107	321-5018-00			RES,FXD:METAL FILM;1.0K OHM,1%,0.125W,TC=10 0 PPM;1206,T&R	80009	321-5018-00
A13R113	321-5018-00			RES,FXD:METAL FILM;1.0K OHM,1%,0.125W,TC=10 0 PPM;1206,T&R	80009	321-5018-00
A13R130	321-5009-00	B010100	B010989	RES,FXD:METAL FILM;182 OHM,1%,0.125W,TC=100 PPM;1206,T&R	80009	321-5009-00
A13R130	321-5010-00	B010990		RES,FXD:METAL FILM;221 OHM,1%,0.125W,TC=100 PPM;1206,T&R	80009	321-5010-00
A13R131	321-5009-00	B010100	B010989	RES,FXD:METAL FILM;182 OHM,1%,0.125W,TC=100 PPM;1206,T&R	80009	321-5009-00
A13R131	321-5010-00	B010990		RES,FXD:METAL FILM;221 OHM,1%,0.125W,TC=100 PPM;1206,T&R	80009	321-5010-00
A13R132	321-5005-00	B010100	B010989	RES,FXD:METAL FILM;27.4 OHM,1%,0.125W,TC=10 0 PPM;1206,T&R	80009	321-5005-00
A13R132	321-5004-00	B010990		RES,FXD:METAL FILM;22.1 OHM,1%,0.125W,TC=10 0 PPM;1206,T&R	80009	321-5004-00
A13R134	321-5018-00			RES,FXD:METAL FILM;1.0K OHM,1%,0.125W,TC=10 0 PPM;1206,T&R	80009	321-5018-00
A13R140	321-5018-00			RES,FXD:METAL FILM;1.0K OHM,1%,0.125W,TC=10 0 PPM;1206,T&R	80009	321-5018-00
A13R142	321-5018-00			RES,FXD:METAL FILM;1.0K OHM,1%,0.125W,TC=10 0 PPM;1206,T&R	80009	321-5018-00

Component No.	Tektronix Part No.	Serial/Assembly No. Effective	Dscont	Name & Description	Mfr. Code	Mfr. Part No.
A13R143	321-5018-00			RES,FXD:METAL FILM;1.0K OHM,1%,0.125W,TC=100 PPM;1206,T&R	80009	321-5018-00
A13R145	321-5018-00			RES,FXD:METAL FILM;1.0K OHM,1%,0.125W,TC=100 PPM;1206,T&R	80009	321-5018-00
A13R146	321-5001-00			RES,FXD:METAL FILM;12.1 OHM,1%,0.125W,TC=100 PPM;1206,T&R	57668	MCR18EZHFW 12E1
A13R148	321-5013-00			RES,FXD:METAL FILM;392 OHM,1%,0.125W,TC=100 PPM;1206,T&R	80009	321-5013-00
A13R149	321-5013-00			RES,FXD:METAL FILM;392 OHM,1%,0.125W,TC=100 PPM;1206,T&R	80009	321-5013-00
A13R150	321-5010-00			RES,FXD:METAL FILM;221 OHM,1%,0.125W,TC=100 PPM;1206,T&R	80009	321-5010-00
A13R151	321-5004-00			RES,FXD:METAL FILM;22.1 OHM,1%,0.125W,TC=100 PPM;1206,T&R	80009	321-5004-00
A13R152	321-5010-00			RES,FXD:METAL FILM;221 OHM,1%,0.125W,TC=100 PPM;1206,T&R	80009	321-5010-00
A13R160	321-5009-00			RES,FXD:METAL FILM;182 OHM,1%,0.125W,TC=100 PPM;1206,T&R	80009	321-5009-00
A13R161	321-5018-00			RES,FXD:METAL FILM;1.0K OHM,1%,0.125W,TC=100 PPM;1206,T&R	80009	321-5018-00
A13R162	321-5018-00			RES,FXD:METAL FILM;1.0K OHM,1%,0.125W,TC=100 PPM;1206,T&R	80009	321-5018-00
A13R163	321-5014-00			RES,FXD:METAL FILM;475 OHM,1%,0.125W,TC=100 PPM;1206,T&R	80009	321-5014-00
A13R167	321-5050-00			RES,FXD:METAL FILM;33.2 OHM,1%,0.125W,TC=100 PPM;1206,T&R	57668	MCR18FWEA33E2
A13R174	321-5018-00			RES,FXD:METAL FILM;1.0K OHM,1%,0.125W,TC=100 PPM;1206,T&R	80009	321-5018-00
A13R175	321-5014-00			RES,FXD:METAL FILM;475 OHM,1%,0.125W,TC=100 PPM;1206,T&R	80009	321-5014-00
A13R176	321-5018-00			RES,FXD:METAL FILM;1.0K OHM,1%,0.125W,TC=100 PPM;1206,T&R	80009	321-5018-00
A13R177	321-5050-00			RES,FXD:METAL FILM;33.2 OHM,1%,0.125W,TC=100 PPM;1206,T&R	57668	MCR18FWEA33E2
A13R178	321-5050-00			RES,FXD:METAL FILM;33.2 OHM,1%,0.125W,TC=100 PPM;1206,T&R	57668	MCR18FWEA33E2
A13R180	321-5018-00			RES,FXD:METAL FILM;1.0K OHM,1%,0.125W,TC=100 PPM;1206,T&R	80009	321-5018-00
A13R181	321-5018-00			RES,FXD:METAL FILM;1.0K OHM,1%,0.125W,TC=100 PPM;1206,T&R	80009	321-5018-00
A13R184	321-5014-00			RES,FXD:METAL FILM;475 OHM,1%,0.125W,TC=100 PPM;1206,T&R	80009	321-5014-00
A13R185	321-5018-00			RES,FXD:METAL FILM;1.0K OHM,1%,0.125W,TC=100 PPM;1206,T&R	80009	321-5018-00
A13R186	321-5018-00			RES,FXD:METAL FILM;1.0K OHM,1%,0.125W,TC=100 PPM;1206,T&R	80009	321-5018-00
A13R188	321-5050-00			RES,FXD:METAL FILM;33.2 OHM,1%,0.125W,TC=100 PPM;1206,T&R	57668	MCR18FWEA33E2
A13R200	321-5018-00			RES,FXD:METAL FILM;1.0K OHM,1%,0.125W,TC=100 PPM;1206,T&R	80009	321-5018-00
A13R203	321-5018-00			RES,FXD:METAL FILM;1.0K OHM,1%,0.125W,TC=100 PPM;1206,T&R	80009	321-5018-00
A13R204	321-5000-00			RES,FXD:METAL FILM;10 OHM,1%,0.125W,TC=100 PPM;1206,T&R	57668	MCR18EZHFW10E
A13R207	321-5050-00			RES,FXD:METAL FILM;33.2 OHM,1%,0.125W,TC=100 PPM;1206,T&R	57668	MCR18FWEA33E2
A13R213	321-5018-00			RES,FXD:METAL FILM;1.0K OHM,1%,0.125W,TC=100 PPM;1206,T&R	80009	321-5018-00

Component No.	Tektronix Part No.	Serial/Assembly No. Effective	Dscont	Name & Description	Mfr. Code	Mfr. Part No.
A13R235	321-5018-00			RES,FXD:METAL FILM;1.0K OHM,1%,0.125W,TC=100 PPM;1206,T&R	80009	321-5018-00
A13R237	321-5018-00			RES,FXD:METAL FILM;1.0K OHM,1%,0.125W,TC=100 PPM;1206,T&R	80009	321-5018-00
A13R243	321-5000-00			RES,FXD:METAL FILM;10 OHM,1%,0.125W,TC=100 PPM;1206,T&R	57668	MCR18EZHFW10E
A13R244	321-5047-00			RES,FXD:METAL FILM;100K OHM,1%,0.125W,TC=100 PPM;1206,T&R	80009	321-5047-00
A13R245	321-5018-00			RES,FXD:METAL FILM;1.0K OHM,1%,0.125W,TC=100 PPM;1206,T&R	80009	321-5018-00
A13R247	321-5018-00			RES,FXD:METAL FILM;1.0K OHM,1%,0.125W,TC=100 PPM;1206,T&R	80009	321-5018-00
A13R250	321-5014-00			RES,FXD:METAL FILM;475 OHM,1%,0.125W,TC=100 PPM;1206,T&R	80009	321-5014-00
A13R251	321-5015-00			RES,FXD:METAL FILM;562 OHM,1%,0.125W,TC=100 PPM;1206,T&R	80009	321-5015-00
A13R253	321-5000-00			RES,FXD:METAL FILM;10 OHM,1%,0.125W,TC=100 PPM;1206,T&R	57668	MCR18EZHFW10E
A13R265	321-5018-00			RES,FXD:METAL FILM;1.0K OHM,1%,0.125W,TC=100 PPM;1206,T&R	80009	321-5018-00
A13R266	321-5000-00			RES,FXD:METAL FILM;10 OHM,1%,0.125W,TC=100 PPM;1206,T&R	57668	MCR18EZHFW10E
A13R273	321-5018-00			RES,FXD:METAL FILM;1.0K OHM,1%,0.125W,TC=100 PPM;1206,T&R	80009	321-5018-00
A13R274	321-5000-00			RES,FXD:METAL FILM;10 OHM,1%,0.125W,TC=100 PPM;1206,T&R	57668	MCR18EZHFW10E
A13R284	321-5018-00			RES,FXD:METAL FILM;1.0K OHM,1%,0.125W,TC=100 PPM;1206,T&R	80009	321-5018-00
A13R285	321-5000-00			RES,FXD:METAL FILM;10 OHM,1%,0.125W,TC=100 PPM;1206,T&R	57668	MCR18EZHFW10E
A13R286	321-5018-00			RES,FXD:METAL FILM;1.0K OHM,1%,0.125W,TC=100 PPM;1206,T&R	80009	321-5018-00
A13R294	321-5009-00			RES,FXD:METAL FILM;182 OHM,1%,0.125W,TC=100 PPM;1206,T&R	80009	321-5009-00
A13R295	321-5018-00			RES,FXD:METAL FILM;1.0K OHM,1%,0.125W,TC=100 PPM;1206,T&R	80009	321-5018-00
A13R296	321-5051-00			RES,FXD:METAL FILM;0 OHM,1%,0.125W,TC=100 PPM;1206,T&R	80009	321-5051-00
A13R297	321-5018-00			RES,FXD:METAL FILM;1.0K OHM,1%,0.125W,TC=100 PPM;1206,T&R	80009	321-5018-00
A13R299	321-5050-00			RES,FXD:METAL FILM;33.2 OHM,1%,0.125W,TC=100 PPM;1206,T&R	57668	MCR18FWEA33E2
A13R301	321-5018-00			RES,FXD:METAL FILM;1.0K OHM,1%,0.125W,TC=100 PPM;1206,T&R	80009	321-5018-00
A13R304	321-5018-00			RES,FXD:METAL FILM;1.0K OHM,1%,0.125W,TC=100 PPM;1206,T&R	80009	321-5018-00
A13R313	321-5018-00			RES,FXD:METAL FILM;1.0K OHM,1%,0.125W,TC=100 PPM;1206,T&R	80009	321-5018-00
A13R316	321-5018-00			RES,FXD:METAL FILM;1.0K OHM,1%,0.125W,TC=100 PPM;1206,T&R	80009	321-5018-00
A13R318	321-5018-00			RES,FXD:METAL FILM;1.0K OHM,1%,0.125W,TC=100 PPM;1206,T&R	80009	321-5018-00
A13R320	321-5018-00			RES,FXD:METAL FILM;1.0K OHM,1%,0.125W,TC=100 PPM;1206,T&R	80009	321-5018-00
A13R323	321-5009-00			RES,FXD:METAL FILM;182 OHM,1%,0.125W,TC=100 PPM;1206,T&R	80009	321-5009-00
A13R324	321-5043-00			RES,FXD:METAL FILM;47.5 OHM,1%,0.125W,TC=100 PPM;1206,T&R	80009	321-5043-00

Component No.	Tektronix Part No.	Serial/Assembly No. Effective	Dscont	Name & Description	Mfr. Code	Mfr. Part No.
A13R335	321-5011-00	B010990		RES,FXD:METAL FILM;274 OHM,1%,0.125W,TC=100 PPM;1206,T&R	80009	321-5011-00
A13R336	321-5018-00			RES,FXD:METAL FILM;1.0K OHM,1%,0.125W,TC=10 0 PPM;1206,T&R	80009	321-5018-00
A13R340	321-5018-00			RES,FXD:METAL FILM;1.0K OHM,1%,0.125W,TC=10 0 PPM;1206,T&R	80009	321-5018-00
A13R345	321-5018-00			RES,FXD:METAL FILM;1.0K OHM,1%,0.125W,TC=10 0 PPM;1206,T&R	80009	321-5018-00
A13R346	321-5018-00			RES,FXD:METAL FILM;1.0K OHM,1%,0.125W,TC=10 0 PPM;1206,T&R	80009	321-5018-00
A13R347	321-5018-00			RES,FXD:METAL FILM;1.0K OHM,1%,0.125W,TC=10 0 PPM;1206;T&R	80009	321-5018-00
A13R348	321-5000-00			RES,FXD:METAL FILM;10 OHM,1%,0.125W,TC=100 PPM;1206,T&R	57668	MCR18EZHFW10E
A13R349	321-5014-00			RES,FXD:METAL FILM;475 OHM,1%,0.125W,TC=100 PPM;1206,T&R	80009	321-5014-00
A13R350	321-5043-00			RES,FXD:METAL FILM;47.5 OHM,1%,0.125W,TC=10 0 PPM;1206,T&R	80009	321-5043-00
A13R351	321-5000-00			RES,FXD:METAL FILM;10 OHM,1%,0.125W,TC=100 PPM;1206,T&R	57668	MCR18EZHFW10E
A13R352	321-5047-00			RES,FXD:METAL FILM;100K OHM,1%,0.125W,TC=10 0 PPM;1206,T&R	80009	321-5047-00
A13R353	321-5015-00			RES,FXD:METAL FILM;562 OHM,1%,0.125W,TC=100 PPM;1206,T&R	80009	321-5015-00
A13R354	321-5000-00			RES,FXD:METAL FILM;10 OHM,1%,0.125W,TC=100 PPM;1206,T&R	57668	MCR18EZHFW10E
A13R355	321-5018-00			RES,FXD:METAL FILM;1.0K OHM,1%,0.125W,TC=10 0 PPM;1206,T&R	80009	321-5018-00
A13R360	321-5045-00			RES,FXD:METAL FILM;68.1 OHM,1%,0.125W,TC=10 0 PPM;1206,T&R	80009	321-5045-00
A13R361	321-5015-00			RES,FXD:METAL FILM;562 OHM,1%,0.125W,TC=100 PPM;1206,T&R	80009	321-5015-00
A13R362	321-5018-00			RES,FXD:METAL FILM;1.0K OHM,1%,0.125W,TC=10 0 PPM;1206,T&R	80009	321-5018-00
A13R363	321-5047-00			RES,FXD:METAL FILM;100K OHM,1%,0.125W,TC=10 0 PPM;1206,T&R	80009	321-5047-00
A13R364	321-5047-00			RES,FXD:METAL FILM;100K OHM,1%,0.125W,TC=10 0 PPM;1206,T&R	80009	321-5047-00
A13R365	321-5015-00			RES,FXD:METAL FILM;562 OHM,1%,0.125W,TC=100 PPM;1206,T&R	80009	321-5015-00
A13R366	321-5000-00			RES,FXD:METAL FILM;10 OHM,1%,0.125W,TC=100 PPM;1206,T&R	57668	MCR18EZHFW10E
A13R367	321-5045-00			RES,FXD:METAL FILM;68.1 OHM,1%,0.125W,TC=10 0 PPM;1206,T&R	80009	321-5045-00
A13R368	321-5018-00			RES,FXD:METAL FILM;1.0K OHM,1%,0.125W,TC=10 0 PPM;1206,T&R	80009	321-5018-00
A13R369	321-5018-00			RES,FXD:METAL FILM;1.0K OHM,1%,0.125W,TC=10 0 PPM;1206,T&R	80009	321-5018-00
A13R370	321-5015-00			RES,FXD:METAL FILM;562 OHM,1%,0.125W,TC=100 PPM;1206,T&R	80009	321-5015-00
A13R371	321-5047-00			RES,FXD:METAL FILM;100K OHM,1%,0.125W,TC=10 0 PPM;1206,T&R	80009	321-5047-00
A13R372	321-5047-00			RES,FXD:METAL FILM;100K OHM,1%,0.125W,TC=10 0 PPM;1206,T&R	80009	321-5047-00
A13R373	321-5015-00			RES,FXD:METAL FILM;562 OHM,1%,0.125W,TC=100 PPM;1206,T&R	80009	321-5015-00
A13R374	321-5045-00			RES,FXD:METAL FILM;68.1 OHM,1%,0.125W,TC=10 0 PPM;1206,T&R	80009	321-5045-00

Component No.	Tektronix Part No.	Serial/Assembly No. Effective	Dscont	Name & Description	Mfr. Code	Mfr. Part No.
A13R375	321-5000-00			RES,FXD:METAL FILM;10 OHM,1%,0.125W,TC=100 PPM;1206,T&R	57668	MCR18EZHFW10E
A13R376	321-5015-00			RES,FXD:METAL FILM;562 OHM,1%,0.125W,TC=100 PPM;1206,T&R	80009	321-5015-00
A13R377	321-5018-00			RES,FXD:METAL FILM;1.0K OHM,1%,0.125W,TC=10 0 PPM;1206,T&R	80009	321-5018-00
A13R378	321-5018-00			RES,FXD:METAL FILM;1.0K OHM,1%,0.125W,TC=10 0 PPM;1206,T&R	80009	321-5018-00
A13R380	321-5047-00			RES,FXD:METAL FILM;100K OHM,1%,0.125W,TC=10 0 PPM;1206,T&R	80009	321-5047-00
A13R381	321-5047-00			RES,FXD:METAL FILM;100K OHM,1%,0.125W,TC=10 0 PPM;1206,T&R	80009	321-5047-00
A13R382	321-5015-00			RES,FXD:METAL FILM;562 OHM,1%,0.125W,TC=100 PPM;1206,T&R	80009	321-5015-00
A13R383	321-5000-00			RES,FXD:METAL FILM;10 OHM,1%,0.125W,TC=100 PPM;1206,T&R	57668	MCR18EZHFW10E
A13R384	321-5045-00			RES,FXD:METAL FILM;68.1 OHM,1%,0.125W,TC=10 0 PPM;1206,T&R	80009	321-5045-00
A13R385	321-5015-00			RES,FXD:METAL FILM;562 OHM,1%,0.125W,TC=100 PPM;1206,T&R	80009	321-5015-00
A13R386	321-5047-00			RES,FXD:METAL FILM;100K OHM,1%,0.125W,TC=10 0 PPM;1206,T&R	80009	321-5047-00
A13R387	321-5018-00			RES,FXD:METAL FILM;1.0K OHM,1%,0.125W,TC=10 0 PPM;1206,T&R	80009	321-5018-00
A13R388	321-5018-00			RES,FXD:METAL FILM;1.0K OHM,1%,0.125W,TC=10 0 PPM;1206,T&R	80009	321-5018-00
A13R391	321-5015-00			RES,FXD:METAL FILM;562 OHM,1%,0.125W,TC=100 PPM;1206,T&R	80009	321-5015-00
A13R392	321-5047-00			RES,FXD:METAL FILM;100K OHM,1%,0.125W,TC=10 0 PPM;1206,T&R	80009	321-5047-00
A13R393	321-5000-00			RES,FXD:METAL FILM;10 OHM,1%,0.125W,TC=100 PPM;1206,T&R	57668	MCR18EZHFW10E
A13R394	321-5045-00			RES,FXD:METAL FILM;68.1 OHM,1%,0.125W,TC=10 0 PPM;1206,T&R	80009	321-5045-00
A13R395	321-5018-00			RES,FXD:METAL FILM;1.0K OHM,1%,0.125W,TC=10 0 PPM;1206,T&R	80009	321-5018-00
A13R398	321-5000-00			RES,FXD:METAL FILM;10 OHM,1%,0.125W,TC=100 PPM;1206,T&R	57668	MCR18EZHFW10E
A13R403	321-5030-00			RES,FXD:METAL FILM;10.0K OHM,1%,0.125W,TC=1 00 PPM;1206,T&R	80009	321-5030-00
A13R404	321-5018-00			RES,FXD:METAL FILM;1.0K OHM,1%,0.125W,TC=10 0 PPM;1206,T&R	80009	321-5018-00
A13R410	321-5018-00			RES,FXD:METAL FILM;1.0K OHM,1%,0.125W,TC=10 0 PPM;1206,T&R	80009	321-5018-00
A13R423	321-5007-00			RES,FXD:METAL FILM;121 OHM,1%,0.125W,TC=100 PPM;1206,T&R	80009	321-5007-00
A13R434	321-5018-00			RES,FXD:METAL FILM;1.0K OHM,1%,0.125W,TC=10 0 PPM;1206,T&R	80009	321-5018-00
A13R438	321-5051-00	B010100	B010989	RES,FXD:METAL FILM;0 OHM,1%,0.125W,TC=100 P PM;1206,T&R	80009	321-5051-00
A13R438	321-5003-00	B010990		RES,FXD:METAL FILM;18.2 OHM,1%,0.125W,TC=10 0 PPM;1206,T&R	57668	MCR18EZHFW 18E2
A13R439	321-5011-00	B010990		RES,FXD:METAL FILM;274 OHM,1%,0.125W,TC=100 PPM;1206,T&R	80009	321-5011-00
A13R440	321-5015-00			RES,FXD:METAL FILM;562 OHM,1%,0.125W,TC=100 PPM;1206,T&R	80009	321-5015-00
A13R441	321-5008-00			RES,FXD:METAL FILM;150 OHM,1%,0.125W,TC=100 PPM;1206,T&R	80009	321-5008-00

Component No.	Tektronix Part No.	Serial/Assembly No. Effective	Dscont	Name & Description	Mfr. Code	Mfr. Part No.
A13R442	321-5017-00			RES,FXD:METAL FILM;825 OHM,1%,0.125W,TC=100 PPM;1206,T&R	80009	321-5017-00
A13R444	321-5043-00			RES,FXD:METAL FILM;47.5 OHM,1%,0.125W,TC=10 0 PPM;1206,T&R	80009	321-5043-00
A13R445	321-5014-00			RES,FXD:METAL FILM;475 OHM,1%,0.125W,TC=100 PPM;1206,T&R	80009	321-5014-00
A13R448	321-5018-00			RES,FXD:METAL FILM;1.0K OHM,1%,0.125W,TC=10 0 PPM;1206,T&R	80009	321-5018-00
A13R451	321-5011-00			RES,FXD:METAL FILM;274 OHM,1%,0.125W,TC=100 PPM;1206,T&R	80009	321-5011-00
A13R452	321-5018-00			RES,FXD:METAL FILM;1.0K OHM,1%,0.125W,TC=10 0 PPM;1206,T&R	80009	321-5018-00
A13R453	321-5004-00			RES,FXD:METAL FILM;22.1 OHM,1%,0.125W,TC=10 0 PPM;1206,T&R	80009	321-5004-00
A13R454	321-5018-00			RES,FXD:METAL FILM;1.0K OHM,1%,0.125W,TC=10 0 PPM;1206,T&R	80009	321-5018-00
A13R455	321-5000-00			RES,FXD:METAL FILM;10 OHM,1%,0.125W,TC=100 PPM;1206,T&R	57668	MCR18EZHFW10E
A13R456	321-5043-00			RES,FXD:METAL FILM;47.5 OHM,1%,0.125W,TC=10 0 PPM;1206,T&R	80009	321-5043-00
A13R471	321-5018-00			RES,FXD:METAL FILM;1.0K OHM,1%,0.125W,TC=10 0 PPM;1206,T&R	80009	321-5018-00
A13R484	321-5044-00			RES,FXD:METAL FILM;56.2 OHM,1%,0.125W,TC=10 0 PPM;1206,T&R	01121	BCD56R2FT
A13R492	321-5018-00			RES,FXD:METAL FILM;1.0K OHM,1%,0.125W,TC=10 0 PPM;1206,T&R	80009	321-5018-00
A13R493	321-5018-00			RES,FXD:METAL FILM;1.0K OHM,1%,0.125W,TC=10 0 PPM;1206,T&R	80009	321-5018-00
A13R494	321-5047-00			RES,FXD:METAL FILM;100K OHM,1%,0.125W,TC=10 0 PPM;1206,T&R	80009	321-5047-00
A13R498	321-5018-00			RES,FXD:METAL FILM;1.0K OHM,1%,0.125W,TC=10 0 PPM;1206,T&R	80009	321-5018-00
A13R501	321-5010-00			RES,FXD:METAL FILM;221 OHM,1%,0.125W,TC=100 PPM;1206,T&R	80009	321-5010-00
A13R502	321-5018-00			RES,FXD:METAL FILM;1.0K OHM,1%,0.125W,TC=10 0 PPM;1206,T&R	80009	321-5018-00
A13R503	321-5030-00			RES,FXD:METAL FILM;10.0K OHM,1%,0.125W,TC=1 00 PPM;1206,T&R	80009	321-5030-00
A13R530	321-5013-00	B010100	B010989	RES,FXD:METAL FILM;392 OHM,1%,0.125W,TC=100 PPM;1206,T&R	80009	321-5013-00
A13R530	321-5014-00	B010990		RES,FXD:METAL FILM;475 OHM,1%,0.125W,TC=100 PPM;1206,T&R	80009	321-5014-00
A13R531	321-5001-00	B010100	B010989	RES,FXD:METAL FILM;12.1 OHM,1%,0.125W,TC=10 0 PPM;1206,T&R	57668	MCR18EZHFW 12E1
A13R531	321-5000-00	B010990		RES,FXD:METAL FILM;10 OHM,1%,0.125W,TC=100 PPM;1206,T&R	57668	MCR18EZHFW10E
A13R532	321-5013-00	B010100	B010989	RES,FXD:METAL FILM;392 OHM,1%,0.125W,TC=100 PPM;1206,T&R	80009	321-5013-00
A13R532	321-5014-00	B010990		RES,FXD:METAL FILM;475 OHM,1%,0.125W,TC=100 PPM;1206,T&R	80009	321-5014-00
A13R538	321-5018-00			RES,FXD:METAL FILM;1.0K OHM,1%,0.125W,TC=10 0 PPM;1206,T&R	80009	321-5018-00
A13R540	321-5018-00			RES,FXD:METAL FILM;1.0K OHM,1%,0.125W,TC=10 0 PPM;1206,T&R	80009	321-5018-00
A13R541	321-5045-00			RES,FXD:METAL FILM;68.1 OHM,1%,0.125W,TC=10 0 PPM;1206,T&R	80009	321-5045-00
A13R544	321-5007-00			RES,FXD:METAL FILM;121 OHM,1%,0.125W,TC=100 PPM;1206,T&R	80009	321-5007-00

Component No.	Tektronix Part No.	Serial/Assembly No. Effective	Dscont	Name & Description	Mfr. Code	Mfr. Part No.
A13R545	321-5016-00			RES,FXD:METAL FILM;681 OHM,1%,0.125W,TC=100 PPM;1206,T&R	01121	BCK6810FT
A13R548	321-5018-00			RES,FXD:METAL FILM;1.0K OHM,1%,0.125W,TC=10 0 PPM;1206,T&R	80009	321-5018-00
A13R550	321-5047-00			RES,FXD:METAL FILM;100K OHM,1%,0.125W,TC=10 0 PPM;1206,T&R	80009	321-5047-00
A13R551	321-5018-00			RES,FXD:METAL FILM;1.0K OHM,1%,0.125W,TC=10 0 PPM;1206,T&R	80009	321-5018-00
A13R552	321-5047-00			RES,FXD:METAL FILM;100K OHM,1%,0.125W,TC=10 0 PPM;1206,T&R	80009	321-5047-00
A13R553	321-5018-00			RES,FXD:METAL FILM;1.0K OHM,1%,0.125W,TC=10 0 PPM;1206,T&R	80009	321-5018-00
A13R554	321-5047-00			RES,FXD:METAL FILM;100K OHM,1%,0.125W,TC=10 0 PPM;1206,T&R	80009	321-5047-00
A13R561	321-5023-00			RES,FXD:METAL FILM;2.74K OHM,1%,0.125W,TC=1 00 PPM;1206,T&R	80009	321-5023-00
A13R562	321-5000-00			RES,FXD:METAL FILM;10 OHM,1%,0.125W,TC=100 PPM;1206,T&R	57668	MCR18EZHFW10E
A13R563	321-5023-00			RES,FXD:METAL FILM;2.74K OHM,1%,0.125W,TC=1 00 PPM;1206,T&R	80009	321-5023-00
A13R571	321-5047-00			RES,FXD:METAL FILM;100K OHM,1%,0.125W,TC=10 0 PPM;1206,T&R	80009	321-5047-00
A13R572	321-5018-00			RES,FXD:METAL FILM;1.0K OHM,1%,0.125W,TC=10 0 PPM;1206,T&R	80009	321-5018-00
A13R573	321-5018-00			RES,FXD:METAL FILM;1.0K OHM,1%,0.125W,TC=10 0 PPM;1206,T&R	80009	321-5018-00
A13R574	321-5047-00			RES,FXD:METAL FILM;100K OHM,1%,0.125W,TC=10 0 PPM;1206,T&R	80009	321-5047-00
A13R575	321-5047-00			RES,FXD:METAL FILM;100K OHM,1%,0.125W,TC=10 0 PPM;1206,T&R	80009	321-5047-00
A13R580	321-5025-00			RES,FXD:METAL FILM;3.92K OHM,1%,0.125W,TC=1 00 PPM;1206,T&R	80009	321-5025-00
A13R581	321-5019-00			RES,FXD:METAL FILM;1.21K OHM,1%,0.125W,TC=1 00 PPM;1206,T&R	80009	321-5019-00
A13R582	321-5010-00			RES,FXD:METAL FILM;221 OHM,1%,0.125W,TC=100 PPM;1206,T&R	80009	321-5010-00
A13R583	321-5044-00			RES,FXD:METAL FILM;56.2 OHM,1%,0.125W,TC=10 0 PPM;1206,T&R	01121	BCD56R2FT
A13R605	321-5018-00			RES,FXD:METAL FILM;1.0K OHM,1%,0.125W,TC=10 0 PPM;1206,T&R	80009	321-5018-00
A13R606	321-5018-00			RES,FXD:METAL FILM;1.0K OHM,1%,0.125W,TC=10 0 PPM;1206,T&R	80009	321-5018-00
A13R608	321-5018-00			RES,FXD:METAL FILM;1.0K OHM,1%,0.125W,TC=10 0 PPM;1206,T&R	80009	321-5018-00
A13R640	321-5009-00			RES,FXD:METAL FILM;182 OHM,1%,0.125W,TC=100 PPM;1206,T&R	80009	321-5009-00
A13R641	321-5026-00			RES,FXD:METAL FILM;4.75K OHM,1%,0.125W,TC=1 00 PPM;1206,T&R	80009	321-5026-00
A13R644	321-5023-00			RES,FXD:METAL FILM;2.74K OHM,1%,0.125W,TC=1 00 PPM;1206,T&R	80009	321-5023-00
A13R646	321-5016-00			RES,FXD:METAL FILM;681 OHM,1%,0.125W,TC=100 PPM;1206,T&R	01121	BCK6810FT
A13R647	321-5031-00			RES,FXD:METAL FILM;12.1K OHM,1%,0.125W,TC=1 00 PPM;1206,T&R	80009	321-5031-00
A13R648	321-5043-00			RES,FXD:METAL FILM;47.5 OHM,1%,0.125W,TC=10 0 PPM;1206,T&R	80009	321-5043-00
A13R650	321-5018-00			RES,FXD:METAL FILM;1.0K OHM,1%,0.125W,TC=10 0 PPM;1206,T&R	80009	321-5018-00

Component No.	Tektronix Part No.	Serial/Assembly No. Effective	Dscont	Name & Description	Mfr. Code	Mfr. Part No.
A13R651	321-5047-00			RES,FXD:METAL FILM;100K OHM,1%,0.125W,TC=100 PPM;1206,T&R	80009	321-5047-00
A13R652	321-5018-00			RES,FXD:METAL FILM;1.0K OHM,1%,0.125W,TC=100 PPM;1206,T&R	80009	321-5018-00
A13R653	321-5047-00			RES,FXD:METAL FILM;100K OHM,1%,0.125W,TC=100 PPM;1206,T&R	80009	321-5047-00
A13R662	321-5000-00			RES,FXD:METAL FILM;10 OHM,1%,0.125W,TC=100 PPM;1206,T&R	57668	MCR18EZHFW10E
A13R671	321-5030-00			RES,FXD:METAL FILM;10.0K OHM,1%,0.125W,TC=100 PPM;1206,T&R	80009	321-5030-00
A13R672	321-5030-00			RES,FXD:METAL FILM;10.0K OHM,1%,0.125W,TC=100 PPM;1206,T&R	80009	321-5030-00
A13R685	321-5017-00			RES,FXD:METAL FILM;825 OHM,1%,0.125W,TC=100 PPM;1206,T&R	80009	321-5017-00
A13R686	321-5019-00			RES,FXD:METAL FILM;1.21K OHM,1%,0.125W,TC=100 PPM;1206,T&R	80009	321-5019-00
A13T256	120-1721-00			TRANSFORMER,RF:AUTO,6:6:6 RATIO	0JR03	120-1721-00
A13T700	120-1720-00			TRANSFORMER,RF:BALUN,1:11 RATIO,TAPPED AT 4 TURNS,W/HOLDER,CORE 276-0712-00	0JR03	120-1720-00
A13T750	120-1720-00			TRANSFORMER,RF:BALUN,1:11 RATIO,TAPPED AT 4 TURNS,W/HOLDER,CORE 276-0712-00	0JR03	120-1720-00
A13T760	120-1720-00			TRANSFORMER,RF:BALUN,1:11 RATIO,TAPPED AT 4 TURNS,W/HOLDER,CORE 276-0712-00	0JR03	120-1720-00
A13T770	120-1720-00			TRANSFORMER,RF:BALUN,1:11 RATIO,TAPPED AT 4 TURNS,W/HOLDER,CORE 276-0712-00	0JR03	120-1720-00
A13T780	120-1720-00			TRANSFORMER,RF:BALUN,1:11 RATIO,TAPPED AT 4 TURNS,W/HOLDER,CORE 276-0712-00	0JR03	120-1720-00
A13T790	120-1720-00			TRANSFORMER,RF:BALUN,1:11 RATIO,TAPPED AT 4 TURNS,W/HOLDER,CORE 276-0712-00	0JR03	120-1720-00
A13U190	156-5081-01			IC,DIGITAL:HCTMOS,GATE;HEX INVERTER;74HCT04,SO14.150,16MM T&R	80009	156-5081-01
A13U300	156-5088-00			IC,DIGITAL:HCTCMOS,DEMUX/DECODER;3-TO-8 DECODER;74HCT138,SO16.150,TUBE	80009	156-5088-00
A13U400	156-5021-01			IC,DIGITAL:CMOS,REGISTER;8-STAGE SHIFT/STORAGE, 3-STATE;4094,SO16.150,16MM T&R	80009	156-5021-01
A13U560	156-5081-01			IC,DIGITAL:HCTMOS,GATE;HEX INVERTER;74HCT04,SO14.150,16MM T&R	80009	156-5081-01
A13U570	156-5021-01			IC,DIGITAL:CMOS,REGISTER;8-STAGE SHIFT/STORAGE, 3-STATE;4094,SO16.150,16MM T&R	80009	156-5021-01
A13U650	156-5088-00			IC,DIGITAL:HCTCMOS,DEMUX/DECODER;3-TO-8 DECODER;74HCT138,SO16.150,TUBE	80009	156-5088-00
A13U660	156-5021-01			IC,DIGITAL:CMOS,REGISTER;8-STAGE SHIFT/STORAGE, 3-STATE;4094,SO16.150,16MM T&R	80009	156-5021-01
A13U670	156-5043-01			IC,CONVERTER:BIPOLAR,D/A;8 BIT,CURRENT OUT, MULTIPLYING;DAC08ED,SO16.150,16MM T&R	80009	156-5043-01
A13U680	156-5018-00			IC,LINEAR:BIPOLAR,OP-AMP;DUAL,SINGLE SUPPLY;LM358D,SO8.150,TUBE	80009	156-5018-00
A13U681	156-5298-00			IC,LINEAR:BIPOLAR,VOLTAGE REGULATOR;POSITIVE,5V,100MA,5%;MC78L05ACD,SO8.150,TUBE	80009	156-5298-00
A13Y711	158-0323-00			XTAL UNIT,QTZ:4 POLE,10MHZ	34630	001-56-440
A13Y720	158-0323-00			XTAL UNIT,QTZ:4 POLE,10MHZ	34630	001-56-440
A13Y811	158-0324-00			XTAL UNIT,QTZ:SET OF 3 : 3 POLE MONOLITHIC CRYSTAL FILTERS, CENTER	34630	001-56-450
A13Y820	158-0324-00			XTAL UNIT,QTZ:SET OF 3 : 3 POLE MONOLITHIC CRYSTAL FILTERS, CENTER	34630	001-56-450
A13Y821	158-0324-00			XTAL UNIT,QTZ:SET OF 3 : 3 POLE MONOLITHIC CRYSTAL FILTERS, CENTER	34630	001-56-450
A14	672-1308-05	B033995		CIRCUIT BD ASSY:RF MOM	80009	672-1308-05

Component No.	Tektronix Part No.	Serial/Assembly No. Effective	Dscont	Name & Description	Mfr. Code	Mfr. Part No.
A14A1		B033995		CIRCUIT BD ASSY:RF MOM	80009	671-1196-02
A14A1C120	283-5002-00			CAP,FXD,CER DI:1000PF,10%,50V	80009	283-5002-00
A14A1C121	283-5008-00			CAP,FXD,CER DI:12PF,5%,50V	54583	C3216C0G1H120J
A14A1C165	283-5004-00			CAP,FXD,CER DI:0.1UF,10%,25V	80009	283-5004-00
A14A1C171	283-5004-00			CAP,FXD,CER DI:0.1UF,10%,25V	80009	283-5004-00
A14A1C173	283-5004-00			CAP,FXD,CER DI:0.1UF,10%,25V	80009	283-5004-00
A14A1C180	283-5004-00			CAP,FXD,CER DI:0.1UF,10%,25V	80009	283-5004-00
A14A1C201	290-0517-00			CAP,FXD,ELCTLT:6.8UF,20%,35V	05397	T368B685M035AZ
A14A1C202	283-5004-00			CAP,FXD,CER DI:0.1UF,10%,25V	80009	283-5004-00
A14A1C203	290-0782-00			CAP,FXD,ELCTLT:4.7UF,+75-20%,35VDC	55680	UVX1V4R7MAA
A14A1C210	283-5004-00			CAP,FXD,CER DI:0.1UF,10%,25V	80009	283-5004-00
A14A1C220	283-5011-00			CAP,FXD,CER DI:33PF,5%,50V	95275	VJ1206A330JXA
A14A1C221	283-5000-00			CAP,FXD,CER DI:10PF,5%,50V	80009	283-5000-00
A14A1C261	283-5004-00			CAP,FXD,CER DI:0.1UF,10%,25V	80009	283-5004-00
A14A1C264	283-5004-00			CAP,FXD,CER DI:0.1UF,10%,25V	80009	283-5004-00
A14A1C271	283-5004-00			CAP,FXD,CER DI:0.1UF,10%,25V	80009	283-5004-00
A14A1C272	283-5004-00			CAP,FXD,CER DI:0.1UF,10%,25V	80009	283-5004-00
A14A1C274	283-5004-00			CAP,FXD,CER DI:0.1UF,10%,25V	80009	283-5004-00
A14A1C280	283-5006-00			CAP,FXD,CER DI:5PF,+/- 0.25PF,50V	54583	C3216C0G1H050C
A14A1C310	283-5004-00			CAP,FXD,CER DI:0.1UF,10%,25V	80009	283-5004-00
A14A1C311	283-5004-00			CAP,FXD,CER DI:0.1UF,10%,25V	80009	283-5004-00
A14A1C320	283-5000-00			CAP,FXD,CER DI:10PF,5%,50V	80009	283-5000-00
A14A1C321	283-5000-00			CAP,FXD,CER DI:10PF,5%,50V	80009	283-5000-00
A14A1C330	283-5002-00			CAP,FXD,CER DI:1000PF,10%,50V	80009	283-5002-00
A14A1C340	290-5002-00			CAP,FXD,ELCTLT:10UF,20V	TK1424	20MC100M-TER
A14A1C350	283-5004-00			CAP,FXD,CER DI:0.1UF,10%,25V	80009	283-5004-00
A14A1C361	283-5004-00			CAP,FXD,CER DI:0.1UF,10%,25V	80009	283-5004-00
A14A1C362	283-5004-00			CAP,FXD,CER DI:0.1UF,10%,25V	80009	283-5004-00
A14A1C363	283-5004-00			CAP,FXD,CER DI:0.1UF,10%,25V	80009	283-5004-00
A14A1C366	283-5004-00			CAP,FXD,CER DI:0.1UF,10%,25V	80009	283-5004-00
A14A1C370	283-5004-00			CAP,FXD,CER DI:0.1UF,10%,25V	80009	283-5004-00
A14A1C372	283-5004-00			CAP,FXD,CER DI:0.1UF,10%,25V	80009	283-5004-00
A14A1C374	283-5004-00			CAP,FXD,CER DI:0.1UF,10%,25V	80009	283-5004-00
A14A1C420	283-5000-00			CAP,FXD,CER DI:10PF,5%,50V	80009	283-5000-00
A14A1C430	283-5002-00			CAP,FXD,CER DI:1000PF,10%,50V	80009	283-5002-00
A14A1C444	283-5004-00			CAP,FXD,CER DI:0.1UF,10%,25V	80009	283-5004-00
A14A1C445	283-5004-00			CAP,FXD,CER DI:0.1UF,10%,25V	80009	283-5004-00
A14A1C465	283-5004-00			CAP,FXD,CER DI:0.1UF,10%,25V	80009	283-5004-00
A14A1C466	283-5004-00			CAP,FXD,CER DI:0.1UF,10%,25V	80009	283-5004-00
A14A1C472	283-5004-00			CAP,FXD,CER DI:0.1UF,10%,25V	80009	283-5004-00
A14A1C476	283-5004-00			CAP,FXD,CER DI:0.1UF,10%,25V	80009	283-5004-00
A14A1C477	283-5004-00			CAP,FXD,CER DI:0.1UF,10%,25V	80009	283-5004-00
A14A1C500	283-5004-00			CAP,FXD,CER DI:0.1UF,10%,25V	80009	283-5004-00
A14A1C501	283-5002-00			CAP,FXD,CER DI:1000PF,10%,50V	80009	283-5002-00
A14A1C502	283-5004-00			CAP,FXD,CER DI:0.1UF,10%,25V	80009	283-5004-00
A14A1C503	283-5004-00			CAP,FXD,CER DI:0.1UF,10%,25V	80009	283-5004-00
A14A1C504	283-5004-00			CAP,FXD,CER DI:0.1UF,10%,25V	80009	283-5004-00
A14A1C510	283-5004-00			CAP,FXD,CER DI:0.1UF,10%,25V	80009	283-5004-00
A14A1C523	283-5011-00			CAP,FXD,CER DI:33PF,5%,50V	95275	VJ1206A330JXA
A14A1C524	283-5011-00			CAP,FXD,CER DI:33PF,5%,50V	95275	VJ1206A330JXA
A14A1C533	283-5001-00			CAP,FXD,CER DI:100PF,5%,50V	80009	283-5001-00
A14A1C534	283-5004-00			CAP,FXD,CER DI:0.1UF,10%,25V	80009	283-5004-00
A14A1C542	283-5004-00			CAP,FXD,CER DI:0.1UF,10%,25V	80009	283-5004-00
A14A1C550	283-5004-00			CAP,FXD,CER DI:0.1UF,10%,25V	80009	283-5004-00
A14A1C551	283-5014-00			CAP,FXD,CER DI:330PF,5%,50V	80009	283-5014-00
A14A1C561	283-5004-00			CAP,FXD,CER DI:0.1UF,10%,25V	80009	283-5004-00
A14A1C562	283-5001-00			CAP,FXD,CER DI:100PF,5%,50V	80009	283-5001-00

Component No.	Tektronix Part No.	Serial/Assembly No. Effective	Dscont	Name & Description	Mfr. Code	Mfr. Part No.
A14A1C564	283-5004-00			CAP,FXD,CER DI:0.1UF,10%,25V	80009	283-5004-00
A14A1C567	283-5001-00			CAP,FXD,CER DI:100PF,5%,50V	80009	283-5001-00
A14A1C572	283-5004-00			CAP,FXD,CER DI:0.1UF,10%,25V	80009	283-5004-00
A14A1C574	283-5004-00			CAP,FXD,CER DI:0.1UF,10%,25V	80009	283-5004-00
A14A1C600	283-5002-00			CAP,FXD,CER DI:1000PF,10%,50V	80009	283-5002-00
A14A1C612	283-5004-00			CAP,FXD,CER DI:0.1UF,10%,25V	80009	283-5004-00
A14A1C619	290-0517-00			CAP,FXD,ELCTLT:6.8UF,20%,35V	05397	T368B685M035AZ
A14A1C620	290-0944-00			CAP,FXD,ELCTLT:220UF,+50-20%,10V	55680	UVX1C221MPA
A14A1C621	283-5004-00			CAP,FXD,CER DI:0.1UF,10%,25V	80009	283-5004-00
A14A1C630	283-5011-00			CAP,FXD,CER DI:33PF,5%,50V	95275	VJ1206A330JXA
A14A1C631	283-5011-00			CAP,FXD,CER DI:33PF,5%,50V	95275	VJ1206A330JXA
A14A1C632	283-5004-00			CAP,FXD,CER DI:0.1UF,10%,25V	80009	283-5004-00
A14A1C640	283-5004-00			CAP,FXD,CER DI:0.1UF,10%,25V	80009	283-5004-00
A14A1C643	283-5004-00			CAP,FXD,CER DI:0.1UF,10%,25V	80009	283-5004-00
A14A1C650	283-5004-00			CAP,FXD,CER DI:0.1UF,10%,25V	80009	283-5004-00
A14A1C651	283-5005-00			CAP,FXD,CER DI:4PF,+/- 0.25PF,50V	54583	C3216C0G1H040C
A14A1C652	283-5014-00			CAP,FXD,CER DI:330PF,5%,50V	80009	283-5014-00
A14A1C653	283-5001-00			CAP,FXD,CER DI:100PF,5%,50V	80009	283-5001-00
A14A1C654	283-5014-00			CAP,FXD,CER DI:330PF,5%,50V	80009	283-5014-00
A14A1C662	283-5004-00			CAP,FXD,CER DI:0.1UF,10%,25V	80009	283-5004-00
A14A1C671	283-5004-00			CAP,FXD,CER DI:0.1UF,10%,25V	80009	283-5004-00
A14A1C675	283-5004-00			CAP,FXD,CER DI:0.1UF,10%,25V	80009	283-5004-00
A14A1C701	283-5002-00			CAP,FXD,CER DI:1000PF,10%,50V	80009	283-5002-00
A14A1C702	283-5002-00			CAP,FXD,CER DI:1000PF,10%,50V	80009	283-5002-00
A14A1C711	283-5004-00			CAP,FXD,CER DI:0.1UF,10%,25V	80009	283-5004-00
A14A1C712	290-0517-00			CAP,FXD,ELCTLT:6.8UF,20%,35V	05397	T368B685M035AZ
A14A1C720	290-0944-00			CAP,FXD,ELCTLT:220UF,+50-20%,10V	55680	UVX1C221MPA
A14A1C721	283-5003-00			CAP,FXD,CER DI:0.01UF,10%,50V	80009	283-5003-00
A14A1C736	283-5004-00			CAP,FXD,CER DI:0.1UF,10%,25V	80009	283-5004-00
A14A1C763	283-5004-00			CAP,FXD,CER DI:0.1UF,10%,25V	80009	283-5004-00
A14A1C780	283-5006-00			CAP,FXD,CER DI:5PF,+/- 0.25PF,50V	54583	C3216C0G1H050C
A14A1CR223	152-0843-00			DIODE,SIG:SCHTKY,;SER-PAIR,20V,410MV,1.3PF; HSMS-2812,SOT-23,T&R	80009	152-0843-00
A14A1CR367	152-5043-00			SEMICOND DVC,DI:PIN,SI,100V,2.5 OHM,0.35PF, 0.35PF,SOT-23,HSMP-3802	80009	152-5043-00
A14A1CR369	152-5043-00			SEMICOND DVC,DI:PIN,SI,100V,2.5 OHM,0.35PF, 0.35PF,SOT-23,HSMP-3802	80009	152-5043-00
A14A1FL180	119-2576-01			FILTER:110MHZ	80009	119-2576-01
A14A1J100	131-1803-02			CONN,RCPT,ELEC:	80009	131-1803-02
A14A1J160	131-1857-00			CONN,HDR:PCB,;MALE,STR,1 X 36,0.1 CTR,0.230 MLG X 0.100 TAIL,GOLD;,,	58050	082-3644-SS10
A14A1J400	131-3774-00			CONN,HDR:PCB,;MALE,STR,2 X 36,0.1 CTR,0.230 MLG X 0.095 TAIL,30 GOLD;,,	22526	65610-172
A14A1J410	131-0938-00			CONN,RF JACK::SMB/PNL,;MALE,STR,50 OHM,0.25 HEX,2.0 L 0.025 DIA TAIL,10-32 THD,REAR MT	24931	32JR125-1
A14A1J520	131-1857-00			CONN,HDR:PCB,;MALE,STR,1 X 36,0.1 CTR,0.230 MLG X 0.100 TAIL,GOLD;,,	58050	082-3644-SS10
A14A1J565	131-0938-00			CONN,RF JACK::SMB/PNL,;MALE,STR,50 OHM,0.25 HEX,2.0 L 0.025 DIA TAIL,10-32 THD,REAR MT	24931	32JR125-1
A14A1J670	131-0938-00			CONN,RF JACK::SMB/PNL,;MALE,STR,50 OHM,0.25 HEX,2.0 L 0.025 DIA TAIL,10-32 THD,REAR MT	24931	32JR125-1
A14A1J700	131-3774-00			CONN,HDR:PCB,;MALE,STR,2 X 36,0.1 CTR,0.230 MLG X 0.095 TAIL,30 GOLD;,,	22526	65610-172
A14A1J770	131-1857-00			CONN,HDR:PCB,;MALE,STR,1 X 36,0.1 CTR,0.230 MLG X 0.100 TAIL,GOLD;,,	58050	082-3644-SS10
A14A1L122	108-5013-00			COIL,RF:	80009	108-5013-00
A14A1L201	108-1262-00			COIL,RF:FXD,100UH,10%,Q=30,SRF 8.2MHZ,DCR 0 .23 OHM,I MAX 0.75ARADIAL LEAD	80009	108-1262-00
A14A1L222	108-5013-00			COIL,RF:	80009	108-5013-00

Component No.	Tektronix Part No.	Serial/Assembly No. Effective	Dscont	Name & Description	Mfr. Code	Mfr. Part No.
A14A1L364	108-5005-00			COIL,RF:	80009	108-5005-00
A14A1L375	108-5005-00			COIL,RF:	80009	108-5005-00
A14A1L402	108-5093-00			COIL,RF:	02113	1812LS-222 XKBA
A14A1L403	108-5093-00			COIL,RF:	02113	1812LS-222 XKBA
A14A1L511	108-5000-00			COIL,RF:	80009	108-5000-00
A14A1L525	108-5001-00			COIL,RF:FXD,70NH,+/-5%,Q=35,SRF 900MHZ, DCR 0.55 OHM, I MAX	80009	108-5001-00
A14A1L611	108-1262-00			COIL,RF:FXD,100UH,10%,Q=30,SRF 8.2MHZ,DCR 0.23 OHM,I MAX 0.75ARADIAL LEAD	80009	108-1262-00
A14A1L622	108-5001-00			COIL,RF:FXD,70NH,+/-5%,Q=35,SRF 900MHZ, DCR 0.55 OHM, I MAX	80009	108-5001-00
A14A1L652	108-5000-00			COIL,RF:	80009	108-5000-00
A14A1L655	108-5000-00			COIL,RF:	80009	108-5000-00
A14A1L710	108-1262-00			COIL,RF:FXD,100UH,10%,Q=30,SRF 8.2MHZ,DCR 0.23 OHM,I MAX 0.75ARADIAL LEAD	80009	108-1262-00
A14A1L750	108-5001-00			COIL,RF:FXD,70NH,+/-5%,Q=35,SRF 900MHZ, DCR 0.55 OHM, I MAX	80009	108-5001-00
A14A1P160	131-3199-00			BUS,CONDUCTOR:SHUNT,;FEMALE,1 X 2,0.1 CTR,0.200 H,LOW PROFILE,JUMPER;,,	22526	76264-101
A14A1P770	131-3199-00			BUS,CONDUCTOR:SHUNT,;FEMALE,1 X 2,0.1 CTR,0.200 H,LOW PROFILE,JUMPER;,,	22526	76264-101
A14AiQ112	151-5010-01	B033995				
A14A1Q164	151-5010-00			TRANSISTOR,SIG:BIPOLAR,NPN;12V,200MA,6.5GHZ,AMPLIFIER;NE85634/2SC3357,SOT-89,12MM T/R	80009	151-5010-00
A14A1Q266	151-5010-00			TRANSISTOR,SIG:BIPOLAR,NPN;12V,200MA,6.5GHZ,AMPLIFIER;NE85634/2SC3357,SOT-89,12MM T/R	80009	151-5010-00
A14A1Q322	151-0608-00			TRANSISTOR,SIG:BIPOLAR,NPN;12V,65MA,8.5GHZ, AMPLIFIER;NE64535/2SC2585,4 PIN CERAMIC X PKG	80009	151-0608-00
A14A1Q446	151-5000-00			TRANSISTOR,SIG:BIPOLAR,PNP;40V,200MA,250MHZ,AMPLIFIER;MMBT3906L,TO-236/SOT-23,8MM T&R	04713	MMBT3906LT1
A14A1Q461	151-5010-00			TRANSISTOR,SIG:BIPOLAR,NPN;12V,200MA,6.5GHZ,AMPLIFIER;NE85634/2SC3357,SOT-89,12MM T/R	80009	151-5010-00
A14A1Q462	151-5010-00			TRANSISTOR,SIG:BIPOLAR,NPN;12V,200MA,6.5GHZ,AMPLIFIER;NE85634/2SC3357,SOT-89,12MM T/R	80009	151-5010-00
A14A1Q530	151-5001-00			TRANSISTOR,SIG:BIPOLAR,NPN;40V,200MA,300MHZ,AMPLIFIER;MMBT3904L,TO-236/SOT-23,8MM T&R	80009	151-5001-00
A14A1Q540	151-5001-00			TRANSISTOR,SIG:BIPOLAR,NPN;40V,200MA,300MHZ,AMPLIFIER;MMBT3904L,TO-236/SOT-23,8MM T&R	80009	151-5001-00
A14A1Q541	151-5001-00			TRANSISTOR,SIG:BIPOLAR,NPN;40V,200MA,300MHZ,AMPLIFIER;MMBT3904L,TO-236/SOT-23,8MM T&R	80009	151-5001-00
A14A1Q661	151-5009-00			TRANSISTOR,SIG:BIPOLAR,NPN;25V,300MA,1.2GHZ,AMPLIFIER;BFQ17,SOT-89,12MM T/R	80009	151-5009-00
A14A1Q740	151-5010-00			TRANSISTOR,SIG:BIPOLAR,NPN;12V,200MA,6.5GHZ,AMPLIFIER;NE85634/2SC3357,SOT-89,12MM T/R	80009	151-5010-00
A14A1Q741	151-5010-00			TRANSISTOR,SIG:BIPOLAR,NPN;12V,200MA,6.5GHZ,AMPLIFIER;NE85634/2SC3357,SOT-89,12MM T/R	80009	151-5010-00
A14A1R161	321-5004-00			RES,FXD:METAL FILM;22.1 OHM,1%,0.125W,TC=100 PPM;1206,T&R	80009	321-5004-00
A14A1R162	321-5014-00			RES,FXD:METAL FILM;475 OHM,1%,0.125W,TC=100 PPM;1206,T&R	80009	321-5014-00
A14A1R170	321-5018-00			RES,FXD:METAL FILM;1.0K OHM,1%,0.125W,TC=100 PPM;1206,T&R	80009	321-5018-00
A14A1R172	321-5000-00			RES,FXD:METAL FILM;10 OHM,1%,0.125W,TC=100 PPM;1206,T&R	57668	MCR18EZHFW10E
A14A1R200	311-1228-00			RES,VAR,NONWW:TRMR,10K OHM,0.5W	80009	311-1228-00
A14A1R260	321-5001-00			RES,FXD:METAL FILM;12.1 OHM,1%,0.125W,TC=100 PPM;1206,T&R	57668	MCR18EZHFW 12E1
A14A1R262	321-5014-00			RES,FXD:METAL FILM;475 OHM,1%,0.125W,TC=100 PPM;1206,T&R	80009	321-5014-00

Component No.	Tektronix Part No.	Serial/Assembly No. Effective	Dscont	Name & Description	Mfr. Code	Mfr. Part No.
A14A1R263	321-5009-00			RES,FXD:METAL FILM;182 OHM,1%,0.125W,TC=100 PPM;1206,T&R	80009	321-5009-00
A14A1R265	321-5004-00			RES,FXD:METAL FILM;22.1 OHM,1%,0.125W,TC=10 0 PPM;1206,T&R	80009	321-5004-00
A14A1R270	321-5000-00			RES,FXD:METAL FILM;10 OHM,1%,0.125W,TC=100 PPM;1206,T&R	57668	MCR18EZHFW10E
A14A1R273	321-5014-00			RES,FXD:METAL FILM;475 OHM,1%,0.125W,TC=100 PPM;1206,T&R	80009	321-5014-00
A14A1R275	321-5018-00			RES,FXD:METAL FILM;1.0K OHM,1%,0.125W,TC=10 0 PPM;1206,T&R	80009	321-5018-00
A14A1R341	321-5006-00			RES,FXD:METAL FILM;100 OHM,1%,0.125W,TC=100 PPM;1206,T&R	80009	321-5006-00
A14A1R360	321-5009-00			RES,FXD:METAL FILM;182 OHM,1%,0.125W,TC=100 PPM;1206,T&R	80009	321-5009-00
A14A1R365	321-5043-00			RES,FXD:METAL FILM;47.5 OHM,1%,0.125W,TC=10 0 PPM;1206,T&R	80009	321-5043-00
A14A1R368	321-5043-00			RES,FXD:METAL FILM;47.5 OHM,1%,0.125W,TC=10 0 PPM;1206,T&R	80009	321-5043-00
A14A1R371	321-5018-00			RES,FXD:METAL FILM;1.0K OHM,1%,0.125W,TC=10 0 PPM;1206,T&R	80009	321-5018-00
A14A1R373	321-5043-00			RES,FXD:METAL FILM;47.5 OHM,1%,0.125W,TC=10 0 PPM;1206,T&R	80009	321-5043-00
A14A1R400	321-5006-00			RES,FXD:METAL FILM;100 OHM,1%,0.125W,TC=100 PPM;1206,T&R	80009	321-5006-00
A14A1R401	321-5006-00			RES,FXD:METAL FILM;100 OHM,1%,0.125W,TC=100 PPM;1206,T&R	80009	321-5006-00
A14A1R421	321-5018-00			RES,FXD:METAL FILM;1.0K OHM,1%,0.125W,TC=10 0 PPM;1206,T&R	80009	321-5018-00
A14A1R431	321-5013-00			RES,FXD:METAL FILM;392 OHM,1%,0.125W,TC=100 PPM;1206,T&R	80009	321-5013-00
A14A1R440	321-5043-00			RES,FXD:METAL FILM;47.5 OHM,1%,0.125W,TC=10 0 PPM;1206,T&R	80009	321-5043-00
A14A1R441	321-5014-00			RES,FXD:METAL FILM;475 OHM,1%,0.125W,TC=100 PPM;1206,T&R	80009	321-5014-00
A14A1R442	321-5022-00			RES,FXD:METAL FILM;2.21K OHM,1%,0.125W,TC=1 00 PPM;1206,T&R	80009	321-5022-00
A14A1R443	321-5026-00			RES,FXD:METAL FILM;4.75K OHM,1%,0.125W,TC=1 00 PPM;1206,T&R	80009	321-5026-00
A14A1R451	321-5004-00			RES,FXD:METAL FILM;22.1 OHM,1%,0.125W,TC=10 0 PPM;1206,T&R	80009	321-5004-00
A14A1R452	321-5004-00			RES,FXD:METAL FILM;22.1 OHM,1%,0.125W,TC=10 0 PPM;1206,T&R	80009	321-5004-00
A14A1R463	321-5014-00			RES,FXD:METAL FILM;475 OHM,1%,0.125W,TC=100 PPM;1206,T&R	80009	321-5014-00
A14A1R464	321-5009-00			RES,FXD:METAL FILM;182 OHM,1%,0.125W,TC=100 PPM;1206,T&R	80009	321-5009-00
A14A1R467	321-5001-00			RES,FXD:METAL FILM;12.1 OHM,1%,0.125W,TC=10 0 PPM;1206,T&R	57668	MCR18EZHFW 12E1
A14A1R470	321-5018-00			RES,FXD:METAL FILM;1.0K OHM,1%,0.125W,TC=10 0 PPM;1206,T&R	80009	321-5018-00
A14A1R473	321-5000-00			RES,FXD:METAL FILM;10 OHM,1%,0.125W,TC=100 PPM;1206,T&R	57668	MCR18EZHFW10E
A14A1R474	321-5014-00			RES,FXD:METAL FILM;475 OHM,1%,0.125W,TC=100 PPM;1206,T&R	80009	321-5014-00
A14A1R521	321-5015-00			RES,FXD:METAL FILM;562 OHM,1%,0.125W,TC=100 PPM;1206,T&R	80009	321-5015-00
A14A1R522	321-5015-00			RES,FXD:METAL FILM;562 OHM,1%,0.125W,TC=100 PPM;1206,T&R	80009	321-5015-00

Component No.	Tektronix Part No.	Serial/Assembly No. Effective	Dscont	Name & Description	Mfr. Code	Mfr. Part No.
A14A1R531	321-5016-00			RES,FXD:METAL FILM;681 OHM,1%,0.125W,TC=100 PPM;1206,T&R	01121	BCK6810FT
A14A1R532	321-5030-00			RES,FXD:METAL FILM;10.0K OHM,1%,0.125W,TC=100 PPM;1206,T&R	80009	321-5030-00
A14A1R543	321-5030-00			RES,FXD:METAL FILM;10.0K OHM,1%,0.125W,TC=100 PPM;1206,T&R	80009	321-5030-00
A14A1R544	321-5016-00			RES,FXD:METAL FILM;681 OHM,1%,0.125W,TC=100 PPM;1206,T&R	01121	BCK6810FT
A14A1R545	321-5030-00			RES,FXD:METAL FILM;10.0K OHM,1%,0.125W,TC=100 PPM;1206,T&R	80009	321-5030-00
A14A1R552	321-5044-00			RES,FXD:METAL FILM;56.2 OHM,1%,0.125W,TC=100 PPM;1206,T&R	01121	BCD56R2FT
A14A1R563	321-5015-00			RES,FXD:METAL FILM;562 OHM,1%,0.125W,TC=100 PPM;1206,T&R	80009	321-5015-00
A14A1R570	321-5014-00			RES,FXD:METAL FILM;475 OHM,1%,0.125W,TC=100 PPM;1206,T&R	80009	321-5014-00
A14A1R573	321-5000-00			RES,FXD:METAL FILM;10 OHM,1%,0.125W,TC=100 PPM;1206,T&R	57668	MCR18EZHFW10E
A14A1R601	321-5006-00			RES,FXD:METAL FILM;100 OHM,1%,0.125W,TC=100 PPM;1206,T&R	80009	321-5006-00
A14A1R602	321-5006-00			RES,FXD:METAL FILM;100 OHM,1%,0.125W,TC=100 PPM;1206,T&R	80009	321-5006-00
A14A1R633	321-5010-00			RES,FXD:METAL FILM;221 OHM,1%,0.125W,TC=100 PPM;1206,T&R	80009	321-5010-00
A14A1R634	321-5030-00			RES,FXD:METAL FILM;10.0K OHM,1%,0.125W,TC=100 PPM;1206,T&R	80009	321-5030-00
A14A1R635	321-5006-00			RES,FXD:METAL FILM;100 OHM,1%,0.125W,TC=100 PPM;1206,T&R	80009	321-5006-00
A14A1R641	321-5030-00			RES,FXD:METAL FILM;10.0K OHM,1%,0.125W,TC=100 PPM;1206,T&R	80009	321-5030-00
A14A1R642	321-5000-00			RES,FXD:METAL FILM;10 OHM,1%,0.125W,TC=100 PPM;1206,T&R	57668	MCR18EZHFW10E
A14A1R663	321-5014-00			RES,FXD:METAL FILM;475 OHM,1%,0.125W,TC=100 PPM;1206,T&R	80009	321-5014-00
A14A1R664	321-5004-00			RES,FXD:METAL FILM;22.1 OHM,1%,0.125W,TC=100 PPM;1206,T&R	80009	321-5004-00
A14A1R670	321-5000-00			RES,FXD:METAL FILM;10 OHM,1%,0.125W,TC=100 PPM;1206,T&R	57668	MCR18EZHFW10E
A14A1R672	321-5001-00			RES,FXD:METAL FILM;12.1 OHM,1%,0.125W,TC=100 PPM;1206,T&R	57668	MCR18EZHFW 12E1
A14A1R673	321-5014-00			RES,FXD:METAL FILM;475 OHM,1%,0.125W,TC=100 PPM;1206,T&R	80009	321-5014-00
A14A1R674	321-5018-00			RES,FXD:METAL FILM;1.0K OHM,1%,0.125W,TC=100 PPM;1206,T&R	80009	321-5018-00
A14A1R730	321-5044-00			RES,FXD:METAL FILM;56.2 OHM,1%,0.125W,TC=100 PPM;1206,T&R	01121	BCD56R2FT
A14A1R731	321-5015-00			RES,FXD:METAL FILM;562 OHM,1%,0.125W,TC=100 PPM;1206,T&R	80009	321-5015-00
A14A1R732	321-5015-00			RES,FXD:METAL FILM;562 OHM,1%,0.125W,TC=100 PPM;1206,T&R	80009	321-5015-00
A14A1R733	321-5000-00			RES,FXD:METAL FILM;10 OHM,1%,0.125W,TC=100 PPM;1206,T&R	57668	MCR18EZHFW10E
A14A1R734	321-5006-00			RES,FXD:METAL FILM;100 OHM,1%,0.125W,TC=100 PPM;1206,T&R	80009	321-5006-00
A14A1R735	321-5044-00			RES,FXD:METAL FILM;56.2 OHM,1%,0.125W,TC=100 PPM;1206,T&R	01121	BCD56R2FT
A14A1R764	321-5030-00			RES,FXD:METAL FILM;10.0K OHM,1%,0.125W,TC=100 PPM;1206,T&R	80009	321-5030-00

Component No.	Tektronix Part No.	Serial/Assembly No. Effective	Dscont	Name & Description	Mfr. Code	Mfr. Part No.
A14A1R773	321-5024-00	B010100	B010393	RES,FXD:METAL FILM;3.32K OHM,1%,0.125W,TC=100 PPM;1206,T&R	80009	321-5024-00
A14A1R773	321-5026-00	B010394		RES,FXD:METAL FILM;4.75K OHM,1%,0.125W,TC=100 PPM;1206,T&R	80009	321-5026-00
A14A1R774	321-5026-00	B010100	B010393	RES,FXD:METAL FILM;4.75K OHM,1%,0.125W,TC=100 PPM;1206,T&R	80009	321-5026-00
A14A1R774	321-5024-00	B010394		RES,FXD:METAL FILM;3.32K OHM,1%,0.125W,TC=100 PPM;1206,T&R	80009	321-5024-00
A14A1T163	120-1716-00			TRANSFORMER,RF:BALUN,1:8 RATIO,TAPPED AT 3 TURNS,W/HOLDER,CORE 276-0712-00	0JR03	120-1716-00
A14A1T267	120-1716-00			TRANSFORMER,RF:BALUN,1:8 RATIO,TAPPED AT 3 TURNS,W/HOLDER,CORE 276-0712-00	0JR03	120-1716-00
A14A1T460	120-1716-00			TRANSFORMER,RF:BALUN,1:8 RATIO,TAPPED AT 3 TURNS,W/HOLDER,CORE 276-0712-00	0JR03	120-1716-00
A14A1T468	120-1716-00			TRANSFORMER,RF:BALUN,1:8 RATIO,TAPPED AT 3 TURNS,W/HOLDER,CORE 276-0712-00	0JR03	120-1716-00
A14A1T560	120-1720-00			TRANSFORMER,RF:BALUN,1:11 RATIO,TAPPED AT 4 TURNS,W/HOLDER,CORE 276-0712-00	0JR03	120-1720-00
A14A1T636	120-0902-00			XFMR,TOROID:	80009	120-0902-00
A14A1T660	120-0902-00			XFMR,TOROID:	80009	120-0902-00
A14A1T742	120-1630-00			TRANSFORMER,RF:TOROID	0JR03	120-1630-00
A14A1T751	120-1630-00			TRANSFORMER,RF:TOROID	0JR03	120-1630-00
A14A1T760	120-1630-00			TRANSFORMER,RF:TOROID	0JR03	120-1630-00
A14A1U450	156-5298-00			IC,LINEAR:BIPOLAR,VOLTAGE REGULATOR;POSITIVE,5V,100MA,5%;MC78L05ACD,SO8.150,TUBE	80009	156-5298-00
A14A1U546	156-5018-00			IC,LINEAR:BIPOLAR,OP-AMP;DUAL,SINGLE SUPPLY;LM358D,SO8.150,TUBE	80009	156-5018-00
A14A1U610	156-5269-00			IC,DIGITAL:ECL,RECEIVER;TRIPLE LINE;10H116,PLCC20,TUBE	80009	156-5269-00
A14A1U665	156-5281-00	B010100	B010212	IC,LINEAR:DMOS,MISC;BALANCED MIXER;SI8901Y,SO15.150	80009	156-5281-00
A14A1U665	156-5282-00	B010213		IC,MISC:DMOS,ANALOG SWITCH;QUAD FETS;SD5400,SO14.150,TUBE	80009	156-5282-00
A14A2	671-1197-00	B010100	B010657	CIRCUIT BD ASSY:LOCKED 2ND LO	80009	671-1197-00
A14A2	671-1197-01	B010658		CIRCUIT BD ASSY:LOCKED 2ND LO	80009	671-1197-01
A14A2C100	283-5002-00			CAP,FXD,CER DI:1000PF,10%,50V	80009	283-5002-00
A14A2C200	283-5004-00			CAP,FXD,CER DI:0.1UF,10%,25V	80009	283-5004-00
A14A2C201	281-5002-00	B010100	B010657	CAP,VAR,PLASTIC:MULTI-TURN;0.1PF-2.5PF,150V,TOP-ADJ;SMD,BULK (A COPPER WIRE LOOP REPLACES THIS CAP)	80009	281-5002-00
A14A2C211	283-5011-00			CAP,FXD,CER DI:33PF,5%,50V	95275	VJ1206A330JXA
A14A2C212	283-5002-00			CAP,FXD,CER DI:1000PF,10%,50V	80009	283-5002-00
A14A2C220	283-5004-00			CAP,FXD,CER DI:0.1UF,10%,25V	80009	283-5004-00
A14A2C221	283-5004-00			CAP,FXD,CER DI:0.1UF,10%,25V	80009	283-5004-00
A14A2C225	283-5004-00			CAP,FXD,CER DI:0.1UF,10%,25V	80009	283-5004-00
A14A2C240	283-5004-00			CAP,FXD,CER DI:0.1UF,10%,25V	80009	283-5004-00
A14A2C242	283-5004-00			CAP,FXD,CER DI:0.1UF,10%,25V	80009	283-5004-00
A14A2C300	283-5004-00			CAP,FXD,CER DI:0.1UF,10%,25V	80009	283-5004-00
A14A2C323	290-5002-00			CAP,FXD,ELCTLT:10UF,20V	TK1424	20MC100M-TER
A14A2C340	283-5003-00			CAP,FXD,CER DI:0.01UF,10%,50V	80009	283-5003-00
A14A2C341	283-5004-00			CAP,FXD,CER DI:0.1UF,10%,25V	80009	283-5004-00
A14A2C420	283-5004-00			CAP,FXD,CER DI:0.1UF,10%,25V	80009	283-5004-00
A14A2C421	283-5011-00			CAP,FXD,CER DI:33PF,5%,50V	95275	VJ1206A330JXA
A14A2C422	283-5004-00			CAP,FXD,CER DI:0.1UF,10%,25V	80009	283-5004-00
A14A2C432	283-5004-00			CAP,FXD,CER DI:0.1UF,10%,25V	80009	283-5004-00
A14A2C433	283-5004-00			CAP,FXD,CER DI:0.1UF,10%,25V	80009	283-5004-00
A14A2C500	283-5004-00			CAP,FXD,CER DI:0.1UF,10%,25V	80009	283-5004-00
A14A2C520	283-5001-00			CAP,FXD,CER DI:100PF,5%,50V	80009	283-5001-00
A14A2C532	283-5004-00			CAP,FXD,CER DI:0.1UF,10%,25V	80009	283-5004-00

Component No.	Tektronix Part No.	Serial/Assembly No. Effective	Dscont	Name & Description	Mfr. Code	Mfr. Part No.
A14A2CR334	152-5004-00			DIODE,SIG:,ULTRA FAST;70V,0.15A,6NS,SER-PAI R;BAV99,SOT-23,8MM TR	25088	BAV99T
A14A2CR335	152-5004-00			DIODE,SIG:,ULTRA FAST;70V,0.15A,6NS,SER-PAI R;BAV99,SOT-23,8MM TR	25088	BAV99T
A14A2CR336	152-5000-00			SEMICOND DVC,DI:SW,SI,70V,COM CATHODE	80009	152-5000-00
A14A2CR442	152-5000-00			SEMICOND DVC,DI:SW,SI,70V,COM CATHODE	80009	152-5000-00
A14A2P510	131-1857-00			CONN,HDR:PCB,;MALE,STR,1 X 36,0.1 CTR,0.230 MLG X 0.100 TAIL,GOLD;,,	58050	082-3644-SS10
A14A2Q112	151-5010-00			TRANSISTOR,SIG:BIPOLAR,NPN;12V,200MA,6.5GHZ ,AMPLIFIER;NE85634/2SC3357,SOT-89,12MM T/R	80009	151-5010-00
A14A2Q223	151-5000-00			TRANSISTOR,SIG:BIPOLAR,PNP;40V,200MA,250MHZ ,AMPLIFIER;MMBT3906L,TO-236/SOT-23,8MM T&R	04713	MMBT3906LT1
A14A2Q443	151-5001-00			TRANSISTOR,SIG:BIPOLAR,NPN;40V,200MA,300MHZ ,AMPLIFIER;MMBT3904L,TO-236/SOT-23,8MM T&R	80009	151-5001-00
A14A2R110	321-5008-00			RES,FXD:METAL FILM;150 OHM,1%,0.125W,TC=100 PPM;1206,T&R	80009	321-5008-00
A14A2R111	321-5008-00			RES,FXD:METAL FILM;150 OHM,1%,0.125W,TC=100 PPM;1206,T&R	80009	321-5008-00
A14A2R202	321-5016-00			RES,FXD:METAL FILM;681 OHM,1%,0.125W,TC=100 PPM;1206,T&R	01121	BCK6810FT
A14A2R203	321-5006-00			RES,FXD:METAL FILM;100 OHM,1%,0.125W,TC=100 PPM;1206,T&R	80009	321-5006-00
A14A2R204	321-5008-00			RES,FXD:METAL FILM;150 OHM,1%,0.125W,TC=100 PPM;1206,T&R	80009	321-5008-00
A14A2R213	321-5042-00			RES,FXD:METAL FILM;39.2 OHM,1%,0.125W,TC=10 0 PPM;1206,T&R	80009	321-5042-00
A14A2R214	321-5027-00			RES,FXD:METAL FILM;5.62K OHM,1%,0.125W,TC=1 00 PPM;1206,T&R	80009	321-5027-00
A14A2R215	321-5040-00			RES,FXD:METAL FILM;68.1K OHM,1%,0.125W,TC=1 00 PPM;1206,T&R	80009	321-5040-00
A14A2R216	321-5029-00			RES,FXD:METAL FILM;8.25K OHM,1%,0.125W,TC=1 00 PPM;1206,T&R	80009	321-5029-00
A14A2R222	321-5047-00			RES,FXD:METAL FILM;100K OHM,1%,0.125W,TC=10 0 PPM;1206,T&R	80009	321-5047-00
A14A2R224	321-5043-00			RES,FXD:METAL FILM;47.5 OHM,1%,0.125W,TC=10 0 PPM;1206,T&R	80009	321-5043-00
A14A2R231	321-5018-00			RES,FXD:METAL FILM;1.0K OHM,1%,0.125W,TC=10 0 PPM;1206,T&R	80009	321-5018-00
A14A2R232	321-5026-00			RES,FXD:METAL FILM;4.75K OHM,1%,0.125W,TC=1 00 PPM;1206,T&R	80009	321-5026-00
A14A2R241	321-5037-00			RES,FXD:METAL FILM;39.2K OHM,1%,0.125W,TC=1 00 PPM;1206,T&R	80009	321-5037-00
A14A2R310	321-5030-00			RES,FXD:METAL FILM;10.0K OHM,1%,0.125W,TC=1 00 PPM;1206,T&R	80009	321-5030-00
A14A2R320	321-5050-00			RES,FXD:METAL FILM;33.2 OHM,1%,0.125W,TC=10 0 PPM;1206,T&R	57668	MCR18FWEA33E2
A14A2R321	321-5047-00			RES,FXD:METAL FILM;100K OHM,1%,0.125W,TC=10 0 PPM;1206,T&R	80009	321-5047-00
A14A2R322	321-5048-00			RES,FXD:METAL FILM;332K OHM,1%,0.125W,TC=10 0 PPM;1206,T&R	80009	321-5048-00
A14A2R330	321-5047-00			RES,FXD:METAL FILM;100K OHM,1%,0.125W,TC=10 0 PPM;1206,T&R	80009	321-5047-00
A14A2R331	321-5047-00			RES,FXD:METAL FILM;100K OHM,1%,0.125W,TC=10 0 PPM;1206,T&R	80009	321-5047-00
A14A2R332	321-5030-00			RES,FXD:METAL FILM;10.0K OHM,1%,0.125W,TC=1 00 PPM;1206,T&R	80009	321-5030-00
A14A2R333	321-5034-00			RES,FXD:METAL FILM;22.1K OHM,1%,0.125W,TC=1 00 PPM;1206,T&R	80009	321-5034-00

Component No.	Tektronix Part No.	Serial/Assembly No. Effective	Dscont	Name & Description	Mfr. Code	Mfr. Part No.
A14A2R342	321-5022-00			RES,FXD:METAL FILM;2.21K OHM,1%,0.125W,TC=100 PPM;1206,T&R	80009	321-5022-00
A14A2R343	321-5030-00			RES,FXD:METAL FILM;10.0K OHM,1%,0.125W,TC=100 PPM;1206,T&R	80009	321-5030-00
A14A2R410	321-5043-00			RES,FXD:METAL FILM;47.5 OHM,1%,0.125W,TC=100 PPM;1206,T&R	80009	321-5043-00
A14A2R423	321-5000-00			RES,FXD:METAL FILM;10 OHM,1%,0.125W,TC=100 PPM;1206,T&R	57668	MCR18EZHFW10E
A14A2R425	321-5047-00			RES,FXD:METAL FILM;100K OHM,1%,0.125W,TC=100 PPM;1206,T&R	80009	321-5047-00
A14A2R430	321-5050-00			RES,FXD:METAL FILM;33.2 OHM,1%,0.125W,TC=100 PPM;1206,T&R	57668	MCR18FWEA33E2
A14A2R431	321-5022-00			RES,FXD:METAL FILM;2.21K OHM,1%,0.125W,TC=100 PPM;1206,T&R	80009	321-5022-00
A14A2R440	321-5024-00			RES,FXD:METAL FILM;3.32K OHM,1%,0.125W,TC=100 PPM;1206,T&R	80009	321-5024-00
A14A2R441	321-5018-00			RES,FXD:METAL FILM;1.0K OHM,1%,0.125W,TC=100 PPM;1206,T&R	80009	321-5018-00
A14A2R521	321-5004-00			RES,FXD:METAL FILM;22.1 OHM,1%,0.125W,TC=100 PPM;1206,T&R	80009	321-5004-00
A14A2R522	321-5008-00			RES,FXD:METAL FILM;150 OHM,1%,0.125W,TC=100 PPM;1206,T&R	80009	321-5008-00
A14A2R530	321-5000-00			RES,FXD:METAL FILM;10 OHM,1%,0.125W,TC=100 PPM;1206,T&R	57668	MCR18EZHFW10E
A14A2R531	321-5008-00			RES,FXD:METAL FILM;150 OHM,1%,0.125W,TC=100 PPM;1206,T&R	80009	321-5008-00
A14A2R535	311-5011-00			RES,VAR,NONWW:5K OHM,20%,0.2W	32997	3335W-1-502E
A14A2U230	156-5018-00			IC,LINEAR:BIPOLAR,OP-AMP;DUAL,SINGLE SUPPLY ;LM358D,SO8.150,TUBE	80009	156-5018-00
A14A2U424	156-5838-00			IC,DIGITAL:BIPOLAR,PRESCALER;DIVIDE BY 4,2.5GHZ;UPB585G,SO8M-1,TUBE	80009	156-5838-00
A14A2U444	156-5690-00			IC,LINEAR:BIPOLAR,OP-AMP;LOW NOISE;OP27GS,SO8.150,TUBE	80009	156-5690-00
A14A2U511	119-5001-00			MIXER,RING:+7DBM LO,SMD	80009	119-5001-00

Replaceable Electrical Parts List

Component Number	Tektronix Part Number	Serial No. Effective	Serial No. Discont'd	Name & Description	Mfr. Code	Mfr. Part Number
A15	621–0083–13	B033900	B034199	PWR SUPPLY ASSY:CIRCUIT BOARD W/CHASSIS	80009	621–0083–13
A15	621–0083–14	B044200		PWR SUPPLY ASSY:CIRCUIT BOARD W/CHASSIS,SHIELD,MARKERS,389–2167–00 WIRED,2711	80009	621–0083–14
A15B15	119–5081–00			FAN,TUBEAXIAL:12VDC, 60mm X 60MM X 25.5MM,17.65CFM, 42DBA,3.24W,0.27A,SAFETYCONTROLLED	61058	FBA06A12U1A
A15B15	119–0830–07			FAN,TUBEAXIAL:12VDC,2.4W,6500 RPM,31 CFM BRUSHLESS DC MOTOR	61374	69.11.52 WITH 6
A15B15	119–5081–00			FAN,TUBEAXIAL:12VDC,2.60MMX60MMX25MM,17.65CFM 3.24W	61374	69.11.52 WITH 6
A15CR270	152–0839–00			DIODE,RECT:,500V,8A,50NS	04713	MUR850
A15F15	159–0023–00			FUSE,CARTRIDGE:3AG,2A,250V,SLOW BLOW,	71400	MDX2
A15Q250	151–1137–00			TRANSISTOR,PWR:MOS,N–CH;200V,9.0A,0.4 OHM	51993	IRF630 W/FORMED
A15Q251	151–1137–00			TRANSISTOR,PWR:MOS,N–CH;200V,9.0A,0.4 OHM	51993	IRF630 W/FORMED
A15Q270	151–1204–00			TRANSISTOR,PWR:MOS,N–CH;500V,8.8A,0.85 OHM	34371	IRFP440R
A15U120	152–1160–00			MODULE,HV:12KVDC ANODEOUT, –3KVDC CATHODE OUT	75498	149–0011–ED
A15W3	174–0187–00			CABLE ASSY,RF:50 OHM COAX,RIBBON	TK2469	174–0187–00
A15A1				(PART OF A15)		
A15A1C100	285–1255–00			CAP,FXD,PLASTIC:0.01UF,20%,3KV	84411	TEK266 .01 20 3
A15A1C101	285–1255–00			CAP,FXD,PLASTIC:0.01UF,20%,3KV	84411	TEK266 .01 20 3
A15A1C102	285–1255–00			CAP,FXD,PLASTIC:0.01UF,20%,3KV	84411	TEK266 .01 20 3
A15A1C103	290–0947–00			CAP,FXD,ELCTLT:33UF,+50–10%,160V W/SLEEVE ALUMINUM	0H1N5	CEUSM2C330–Q
A15A1C105	285–1255–00			CAP,FXD,PLASTIC:0.01UF,20%,3KV,	84411	TEK266 .01 20 3
A15A1C110	283–0279–00			CAP,FXD,CER DI:0.001UF,20%,3000V	18796	DHR12Y5S102M3K
A15A1C111	283–0279–00			CAP,FXD,CER DI:0.001UF,20%,3000V	18796	DHR12Y5S102M3K V
A15A1C130	283–0079–00		B033899	CAP,FXD,CER DI:0.01UF,20%,250V	04222	SR50VC103MAA
A15A1C130	283–0267–00	B033900		CAP,FXD,CER DI:0.01UF,20%,500V	59660	0841–546–Y550–01
A15A1C131	285–1192–00			CAP,FXD,PPR DI:0.0022 UF,20%,250VAC	TK0515	PME271Y422M
A15A1C145	285–1192–00			CAP,FXD,PPR DI:0.0022 UF,20%,250VAC	TK0515	PME271Y422M
A15A1C150	285–1252–00			CAP,FXD,PLASTIC:0.15UF,10%,250VAC	D5243	F1772–415–2000
A15A1C151	283–0057–00			CAP,FXD,CER DI:0.1UF,+80–20%,200V	04222	SR302E104ZAA
A15A1C152	283–0029–00			CAP,FXD,CER DI:0.005UF,5%,500V	59660	821–000B502J
A15A1C153	285–1252–00			CAP,FXD,PLASTIC:0.15UF,10%,250VAC	D5243	F1772–415–2000
A15A1C163	290–1247–00			CAP,FXD,ALUM:;1000UF,20%,100V,ESR=0.13 OHM (120HZ,20C),18 X 40MM	55680	UPR2A102MRH
A15A1C170	285–1252–00			CAP,FXD,PLASTIC:0.15UF,10%,250VAC	D5243	F1772–415–2000
A15A1C171	290–1249–00			CAP,FXD:ALUM;120UF,20%,400V	62643	82D121M400JD2
A15A1C172	285–1381–00			CAP,FXD,MTLZD:1500PF,10%,250V	TK0515	PME271Y415K
A15A1C173	285–1381–00			CAP,FXD,MTLZD:1500PF,10%,250V	TK0515	PME271Y415K
A15A1C174	285–1381–00			CAP,FXD,MTLZD:1500PF,10%,250V	TK0515	PME271Y415K
A15A1C175	285–1381–00			CAP,FXD,MTLZD:1500PF,10%,250V	TK0515	PME271Y415K
A15A1C176	285–1252–00			CAP,FXD,PLASTIC:0.15UF,10%,250VAC	D5243	F1772–415–2000
A15A1C185	285–1463–00			CAP,FXD,PLASTIC:METALIZED FILM CLASS X 2; 1UF,20%,250VAC,POLYESTER,0.70 X 1.24	4U402	F1773–510–2000

Replaceable Electrical Parts List (Cont.)

Component Number	Tektronix Part Number	Serial No. Effective	Serial No. Discont'd	Name & Description	Mfr. Code	Mfr. Part Number
A15A1C190	283–0481–00			CAP,FXD,CER DI:220PF,10%,250VAC	18796	DE7090B221KVA1
A15A1C200	290–0947–00			CAP,FXD,ELCTLT:33UF,+50–10%,160V W/SLEEVE ALUMINUM	0H1N5	CEUSM2C330–Q
A15A1C201	290–1248–00			CAP,FXD:ALUM;220UF,20%,63V	2N936	517D227M063CG6A
A15A1C202	290–1248–00			CAP,FXD:ALUM;220UF,20%,63V	2N936	517D227M063CG6A
A15A1C203	290–0963–00			CAP,FXD,ALUM:;220UF,+50–20%,25WVDC,10 X12MM	55680	UVX1V221MPA
A15A1C204	290–0963–00			CAP,FXD,ALUM:;220UF,+50–20%,25WVDC,10 X12MM	55680	UVX1V221MPA
A15A1C205	283–0057–00			CAP,FXD,CER DI:0.1UF,+80–20%,200V	04222	SR302E104ZAA
A15A1C212	290–0963–00			CAP,FXD,ALUM:;220UF,+50–20%,25WVDC,10 X12MM	55680	UVX1V221MPA
A15A1C213	290–0963–00			CAP,FXD,ALUM:;220UF,+50–20%,25WVDC,10 X12MM	55680	UVX1V221MPA
A15A1C214	290–0963–00			CAP,FXD,ALUM:;220UF,+50–20%,25WVDC,10 X12MM	55680	UVX1V221MPA
A15A1C220	283–0079–00			CAP,FXD,CER DI:0.01UF,20%,250V	04222	SR50VC103MAA
A15A1C239	283–0486–00			CAP,FXD,CER DI:1.0UF,10%,50V	04222	SR305C105KAA
A15A1C250	283–0029–00			CAP,FXD,CER DI:0.005UF,5%,500V	59660	821–000B502J
A15A1C262	283–0486–00		B033899	CAP,FXD,CER DI:1.0UF,10%,50V	04222	SR305C105KAA
A15A1C262	290–0536–00	B033900		CAP,FXD,ELCTLT:10UF,20%,25V TANTALUM	2N936	199D106X0025CA1
A15A1C270	283–0058–00			CAP,FXD,CER DI:0.027UF,10%,100V	04222	SR591C273KAA
A15A1C280	285–1463–00			CAP,FXD,PLASTIC:METALIZED FILM CLASS X 2; 1UF,20%,250VAC,POLYESTER,0.70 X 1.24	4U402	F1773–510–2000
A15A1C290	290–0973–00			CAP,FXD,ELCTLT:100UF,20%,25VDC	0H1N5	CEUSM1E101
A15A1C300	283–0057–00			CAP,FXD,CER DI:0.1UF,+80–20%,200V	04222	SR302E104ZAA
A15A1C301	283–0057–00			CAP,FXD,CER DI:0.1UF,+80–20%,200V	04222	SR302E104ZAA
A15A1C302	283–0057–00			CAP,FXD,CER DI:0.1UF,+80–20%,200V	04222	SR302E104ZAA
A15A1C303	283–0057–00			CAP,FXD,CER DI:0.1UF,+80–20%,200V	04222	SR302E104ZAA
A15A1C310	283–0212–00			CAP,FXD,CER DI:2UF,20%,50V	04222	SR405E205MAA
A15A1C311	283–0212–00			CAP,FXD,CER DI:2UF,20%,50V	04222	SR405E205MAA
A15A1C312	290–0963–00			CAP,FXD,ALUM:;220UF,+50–20%,25WVDC,10 X12MM	55680	UVX1V221MPA
A15A1C320	290–0963–00			CAP,FXD,ALUM:;220UF,+50–20%,25WVDC,10 X12MM	55680	UVX1V221MPA
A15A1C321	290–0963–00			CAP,FXD,ALUM:;220UF,+50–20%,25WVDC,10 X12MM	55680	UVX1V221MPA
A15A1C322	290–0963–00			CAP,FXD,ALUM:;220UF,+50–20%,25WVDC,10 X12MM	55680	UVX1V221MPA
A15A1C323	290–0963–00			CAP,FXD,ALUM:;220UF,+50–20%,25WVDC,10 X12MM	55680	UVX1V221MPA
A15A1C424	283–0486–00			CAP,FXD,CER DI:1.0UF,10%,50V	04222	SR305C105KAA
A15A1C425	283–0486–00			CAP,FXD,CER DI:1.0UF,10%,50V	04222	SR305C105KAA
A15A1C610	283–5004–00			CAP,FXD,CERAMIC:MLC;0.1UF,10%,25V	TK2058	C3216X7R1E104K
A15A1C620	283–5070–00			CAP,FXD,CERAMIC:MLC;0.01UF,10%,200V	04222	12102C103KAT1A
A15A1C621	283–5070–00			CAP,FXD,CERAMIC:MLC;0.01UF,10%,200V	04222	12102C103KAT1A
A15A1C630	283–5185–00			CAP,FXD,CERAMIC:MLC;1000PF,5%,50V	04222	12065A102JAT1A
A15A1C631	283–5185–00			CAP,FXD,CERAMIC:MLC;1000PF,5%,50V	04222	12065A102JAT1A
A15A1C632	283–5004–00			CAP,FXD,CERAMIC:MLC;0.1UF,10%,25V	TK2058	C3216X7R1E104K
A15A1C633	283–5185–00			CAP,FXD,CERAMIC:MLC;1000PF,5%,50V	04222	12065A102JAT1A
A15A1C634	283–5185–00			CAP,FXD,CERAMIC:MLC;1000PF,5%,50V	04222	12065A102JAT1A

Replaceable Electrical Parts List (Cont.)

Component Number	Tektronix Part Number	Serial No. Effective	Serial No. Discont'd	Name & Description	Mfr. Code	Mfr. Part Number
A15A1C635	283–5004–00			CAP,FXD,CERAMIC:MLC;0.1UF,10%,25V	TK2058	C3216X7R1E104K
A15A1C636	283–5014–00			CAP,FXD,CERAMIC:MLC;330PF,5%,50V	TK2058	C3216C0G1H331J
A15A1C638	283–5185–00			CAP,FXD,CERAMIC:MLC;1000PF,5%,50V	04222	12065A102JAT1A
A15A1C660	283–5004–00			CAP,FXD,CERAMIC:MLC;0.1UF,10%,25V	TK2058	C3216X7R1E104K
A15A1C661	283–5185–00			CAP,FXD,CERAMIC:MLC;1000PF,5%,50V	04222	12065A102JAT1A
A15A1C670	283–5004–00			CAP,FXD,CERAMIC:MLC;0.1UF,10%,25V	TK2058	C3216X7R1E104K
A15A1C671	283–5004–00			CAP,FXD,CERAMIC:MLC;0.1UF,10%,25V	TK2058	C3216X7R1E104K
A15A1C681	283–5003–00			CAP,FXD,CERAMIC:MLC;0.01UF,10%,50V	TK2058	C3216X7R1H103K
A15A1C682	283–5004–00			CAP,FXD,CERAMIC:MLC;0.1UF,10%,25V	TK2058	C3216X7R1E104K
A15A1C690	283–5185–00			CAP,FXD,CERAMIC:MLC;1000PF,5%,50V	04222	12065A102JAT1A
A15A1C691	283–5004–00			CAP,FXD,CERAMIC:MLC;0.1UF,10%,25V	TK2058	C3216X7R1E104K
A15A1C692	283–5003–00			CAP,FXD,CERAMIC:MLC;0.01UF,10%,50V	TK2058	C3216X7R1H103K
A15A1C710	283–5004–00			CAP,FXD,CERAMIC:MLC;0.1UF,10%,25V	TK2058	C3216X7R1E104K
A15A1C720	283–5070–00			CAP,FXD,CERAMIC:MLC;0.01UF,10%,200V	04222	12102C103KAT1A
A15A1C732	283–5004–00			CAP,FXD,CERAMIC:MLC;0.1UF,10%,25V	TK2058	C3216X7R1E104K
A15A1C750	290–0920–00			CAP,FXD,ALUM::33UF,20%,50V,6 X 11MM,0.1SP	55680	UVX1H330MEA
A15A1C760	283–5070–00			CAP,FXD,CERAMIC:MLC;0.01UF,10%,200V	04222	12102C103KAT1A
A15A1C780	283–5004–00			CAP,FXD,CERAMIC:MLC;0.1UF,10%,25V	TK2058	C3216X7R1E104K
A15A1C781	283–5185–00			CAP,FXD,CERAMIC:MLC;1000PF,5%,50V	04222	12065A102JAT1A
A15A1C782	283–5185–00			CAP,FXD,CERAMIC:MLC;1000PF,5%,50V	04222	12065A102JAT1A
A15A1C783	283–5003–00			CAP,FXD,CERAMIC:MLC;0.01UF,10%,50V	TK2058	C3216X7R1H103K
A15A1C800	283–5004–00			CAP,FXD,CERAMIC:MLC;0.1UF,10%,25V	TK2058	C3216X7R1E104K
A15A1C810	283–5018–00			CAP,FXD,CERAMIC:MLC;0.033UF,10%,50V	TK2058	C3216X7R1H333K
A15A1C811	283–5018–00			CAP,FXD,CERAMIC:MLC;0.033UF,10%,50V	TK2058	C3216X7R1H333K
A15A1C812	283–5018–00			CAP,FXD,CERAMIC:MLC;0.033UF,10%,50V	TK2058	C3216X7R1H333K
A15A1C813	283–5185–00			CAP,FXD,CERAMIC:MLC;1000PF,5%,50V	04222	12065A102JAT1A
A15A1C814	283–5004–00			CAP,FXD,CERAMIC:MLC;0.1UF,10%,25V	TK2058	C3216X7R1E104K
A15A1C815	283–5185–00			CAP,FXD,CERAMIC:MLC;1000PF,5%,50V	04222	12065A102JAT1A
A15A1C820	283–5004–00			CAP,FXD,CERAMIC:MLC;0.1UF,10%,25V	TK2058	C3216X7R1E104K
A15A1C822	283–5004–00			CAP,FXD,CERAMIC:MLC;0.1UF,10%,25V	TK2058	C3216X7R1E104K
A15A1C830	283–5004–00			CAP,FXD,CERAMIC:MLC;0.1UF,10%,25V	TK2058	C3216X7R1E104K
A15A1C834	283–5004–00			CAP,FXD,CERAMIC:MLC;0.1UF,10%,25V	TK2058	C3216X7R1E104K
A15A1C840	283–5004–00			CAP,FXD,CERAMIC:MLC;0.1UF,10%,25V	TK2058	C3216X7R1E104K
A15A1C850	283–5004–00			CAP,FXD,CERAMIC:MLC;0.1UF,10%,25V	TK2058	C3216X7R1E104K
A15A1C860	283–5004–00			CAP,FXD,CERAMIC:MLC;0.1UF,10%,25V	TK2058	C3216X7R1E104K
A15A1C861	283–5004–00			CAP,FXD,CERAMIC:MLC;0.1UF,10%,25V	TK2058	C3216X7R1E104K
A15A1C870	283–5004–00			CAP,FXD,CERAMIC:MLC;0.1UF,10%,25V	TK2058	C3216X7R1E104K
A15A1C900	283–5009–00			CAP,FXD,CERAMIC:MLC;15PF,5%,50V	TK2058	C3216C0G1H150J
A15A1C901	283–5004–00			CAP,FXD,CERAMIC:MLC;0.1UF,10%,25V	TK2058	C3216X7R1E104K
A15A1C902	283–5004–00			CAP,FXD,CERAMIC:MLC;0.1UF,10%,25V	TK2058	C3216X7R1E104K
A15A1C903	283–5004–00			CAP,FXD,CERAMIC:MLC;0.1UF,10%,25V	TK2058	C3216X7R1E104K

Replaceable Electrical Parts List (Cont.)

Component Number	Tektronix Part Number	Serial No. Effective	Serial No. Discont'd	Name & Description	Mfr. Code	Mfr. Part Number
A15A1C904	283–5004–00			CAP,FXD,CERAMIC:MLC;0.1UF,10%,25V	TK2058	C3216X7R1E104K
A15A1C905	283–5004–00			CAP,FXD,CERAMIC:MLC;0.1UF,10%,25V	TK2058	C3216X7R1E104K
A15A1C910	283–5004–00			CAP,FXD,CERAMIC:MLC;0.1UF,10%,25V	TK2058	C3216X7R1E104K
A15A1C911	283–5004–00			CAP,FXD,CERAMIC:MLC;0.1UF,10%,25V	TK2058	C3216X7R1E104K
A15A1C912	283–5004–00			CAP,FXD,CERAMIC:MLC;0.1UF,10%,25V	TK2058	C3216X7R1E104K
A15A1C913	283–5004–00			CAP,FXD,CERAMIC:MLC;0.1UF,10%,25V	TK2058	C3216X7R1E104K
A15A1C914	283–5009–00			CAP,FXD,CERAMIC:MLC;15PF,5%,50V	TK2058	C3216C0G1H150J
A15A1C915	283–5004–00			CAP,FXD,CERAMIC:MLC;0.1UF,10%,25V	TK2058	C3216X7R1E104K
A15A1C916	283–5003–00			CAP,FXD,CERAMIC:MLC;0.01UF,10%,50V	TK2058	C3216X7R1H103K
A15A1C920	283–5004–00			CAP,FXD,CERAMIC:MLC;0.1UF,10%,25V	TK2058	C3216X7R1E104K
A15A1C930	283–5004–00			CAP,FXD,CERAMIC:MLC;0.1UF,10%,25V	TK2058	C3216X7R1E104K
A15A1CR180	152–0848–00		B010589	SEMICOND DVC,DI:RECT BRDG,600V,2A,FAST RCVY	14936	RKBU4J
A15A1CR180	152–0848–01	B010590		DIODE,RECT:,BRIDGE,600V,2A,350NS;BR860DF	6L334	BR86DF
A15A1CR200	152–0808–00			DIODE,RECT:,ULTRA FAST;400V,1.5A,50NS	0LUA3	BYD73G
A15A1CR201	152–0808–00			DIODE,RECT:,ULTRA FAST;400V,1.5A,50NS	0LUA3	BYD73G
A15A1CR220	152–0600–00			DIODE,RECT:SCHTKY,;35V,15A,150A IFSM,0.57VF	04713	MBR1535CT
A15A1CR221	152–0884–00			DIODE,RECT:,SCHTKY;35V,16A,150A IFSM,630MVF	04713	MBR1635
A15A1CR222	152–0600–00			DIODE,RECT:SCHTKY,;35V,15A,150A IFSM,0.57VF	04713	MBR1535CT
A15A1CR223	152–0884–00			DIODE,RECT:,SCHTKY;35V,16A,150A IFSM,630MVF	04713	MBR1635
A15A1CR250	152–0808–00			DIODE,RECT:,ULTRA FAST;400V,1.5A,50NS	0LUA3	BYD73G
A15A1CR260	152–0808–00			DIODE,RECT:,ULTRA FAST;400V,1.5A,50NS	0LUA3	BYD73G
A15A1CR271	152–0808–00			DIODE,RECT:,ULTRA FAST;400V,1.5A,50NS	0LUA3	BYD73G
A15A1CR272	152–0808–00			DIODE,RECT:,ULTRA FAST;400V,1.5A,50NS	0LUA3	BYD73G
A15A1CR273	152–0808–00			DIODE,RECT:,ULTRA FAST;400V,1.5A,50NS	0LUA3	BYD73G
A15A1CR290	152–0808–00			DIODE,RECT:,ULTRA FAST;400V,1.5A,50NS	0LUA3	BYD73G
A15A1CR520	152–5008–00			DIODE,RECT:,;400V,1A,MONOLITHIC COM–CATH	25088	BAW79D–E6327
A15A1CR521	152–5008–00			DIODE,RECT:,;400V,1A,MONOLITHIC COM–CATH	25088	BAW79D–E6327
A15A1CR530	152–5008–00		B033899	DIODE,RECT:,;400V,1A,MONOLITHIC COM–CATH	25088	BAW79D–E6327
A15A1CR530	152–0586–00	B033900		SEMICOND DVC,DI:RECT,SI,600V,0.5A MI	0LUA3	BYV96D OR BYV95C
A15A1CR531	152–5008–00		B033899	DIODE,RECT:,;400V,1A,MONOLITHIC COM–CATH	25088	BAW79D–E6327
A15A1CR531	152–0586–00	B033900		SEMICOND DVC,DI:RECT,SI,600V,0.5A MI	0LUA3	BYV96D OR BYV95C
A15A1CR602	152–5008–00			DIODE,RECT:,;400V,1A,MONOLITHIC COM–CATH	25088	BAW79D–E6327
A15A1CR610	152–5008–00			DIODE,RECT:,;400V,1A,MONOLITHIC COM–CATH	25088	BAW79D–E6327
A15A1CR611	152–5008–00			DIODE,RECT:,;400V,1A,MONOLITHIC COM–CATH	25088	BAW79D–E6327
A15A1CR620	152–5008–00			DIODE,RECT:,;400V,1A,MONOLITHIC COM–CATH	25088	BAW79D–E6327
A15A1CR621	152–5008–00			DIODE,RECT:,;400V,1A,MONOLITHIC COM–CATH	25088	BAW79D–E6327
A15A1CR622	152–5008–00			DIODE,RECT:,;400V,1A,MONOLITHIC COM–CATH	25088	BAW79D–E6327
A15A1CR623	152–5008–00			DIODE,RECT:,;400V,1A,MONOLITHIC COM–CATH	25088	BAW79D–E6327
A15A1CR640	152–0808–00			DIODE,RECT:,ULTRA FAST;400V,1.5A,50NS	0LUA3	BYD73G
A15A1CR660	152–5000–00			DIODE,SIG:,ULTRA FAST;70V,0.15A,6NS,COM–CATH	0LUA3	BAV70TRL

Replaceable Electrical Parts List (Cont.)

Component Number	Tektronix Part Number	Serial No. Effective	Serial No. Discont'd	Name & Description	Mfr. Code	Mfr. Part Number
A15A1CR661	152–5000–00			DIODE,SIG:,ULTRA FAST;70V,0.15A,6NS,COM–CATH	0LUA3	BAV70TRL
A15A1CR680	152–5005–00			DIODE,SIG:,ULTRA FAST;70V,0.15A,6NS,COM–ANODE	04713	BAW56LT1
A15A1CR700	152–5000–00			DIODE,SIG:,ULTRA FAST;70V,0.15A,6NS,COM–CATH	0LUA3	BAV70TRL
A15A1CR710	152–5000–00			DIODE,SIG:,ULTRA FAST;70V,0.15A,6NS,COM	0LUA3	BAV70TRL
A15A1CR731	152–5008–00			DIODE,RECT:,;400V,1A,MONOLITHIC COM–CATH	25088	BAW79D–E6327
A15A1CR740	152–0808–00			DIODE,RECT:,ULTRA FAST;400V,1.5A,50NS	0LUA3	BYD73G
A15A1CR750	152–5005–00			DIODE,SIG:,ULTRA FAST;70V,0.15A,6NS,COM–ANODE	04713	BAW56LT1
A15A1CR780	152–5005–00			DIODE,SIG:,ULTRA FAST;70V,0.15A,6NS,COM–ANODE	04713	BAW56LT1
A15A1CR810	152–5008–00			DIODE,RECT:,;400V,1A,MONOLITHIC COM–CATH	25088	BAW79D–E6327
A15A1CR811	152–5008–00			DIODE,RECT:,;400V,1A,MONOLITHIC COM–CATH	25088	BAW79D–E6327
A15A1CR812	152–5005–00			DIODE,SIG:,ULTRA FAST;70V,0.15A,6NS,COM–ANODE	04713	BAW56LT1
A15A1CR820	152–5008–00			DIODE,RECT:,;400V,1A,MONOLITHIC COM–CATH	25088	BAW79D–E6327
A15A1CR821	152–5008–00			DIODE,RECT:,;400V,1A,MONOLITHIC COM–CATH	25088	BAW79D–E6327
A15A1E110	119–0181–00			ARSR,ELEC SURGE:230V, +/–15%; GAS DISCHARGE	0C8T6	BBS–230V +/–15%
A15A1J3	131–3774–00			CONN,HDR:PCB,;MALE,STR,2 X 36,0.1 CTR,0.230	22526	67996–172
A15A1J6	131–3774–00			CONN,HDR:PCB,;MALE,STR,2 X 36,0.1 CTR,0.230	22526	67996–172
A15A1J7	131–3557–00			CONN,HDR::PCB,;MALE,STR,2 X 12,0.1 CTR,0.555 H X0.177 TAIL,SHRD/4 SIDES,W/CARD SLOT &	22526	67273–012
A15A1J8	131–3557–00			CONN,HDR::PCB,;MALE,STR,2 X 12,0.1 CTR,0.555 H X0.177 TAIL,SHRD/4 SIDES,W/CARD SLOT &	22526	67273–012
A15A1J9	131–3557–00			CONN,HDR::PCB,;MALE,STR,2 X 12,0.1 CTR,0.555 H X0.177 TAIL,SHRD/4 SIDES,W/CARD SLOT &	22526	67273–012
A15A1J10	131–3557–00			CONN,HDR::PCB,;MALE,STR,2 X 12,0.1 CTR,0.555 H X 0.177 TAIL,SHRD/4 SIDES,W/CARD SLOT &	22526	67273–012
A15A1J11	131–3557–00			CONN,HDR::PCB,;MALE,STR,2 X 12,0.1 CTR,0.555 H X0.177 TAIL,SHRD/4 SIDES,W/CARD SLOT &	22526	67273–012
A15A1J12	131–3557–00			CONN,HDR::PCB,;MALE,STR,2 X 12,0.1 CTR,0.555 H X0.177 TAIL,SHRD/4 SIDES,W/CARD SLOT &	22526	67273–012
A15A1J930	131–1425–00			CONN,HDR:PCB,;MALE,RTANG,1 X 36,0.1CTR,0.23 0 MLG X 0.090 TAIL,30 GOLD,STACKABLE	22526	65521–136
A15A1L100	108–1262–00			INDUCTOR,FXD:POWER;100UH,10%,I<0.75A,RDC<0.23 OHM,Q>15,SRF>5.4MHZ,BOBBIN CORE	TK2058	TSL0807–101KR75
A15A1L170	108–1441–00			COIL,RF:8.8UH,20%	0JR03	108–1441–00
A15A1L200	108–1262–00			INDUCTOR,FXD:POWER;100UH,10%,I<0.75A,RDC<0. 23 OHM,Q>15,SRF>5.4MHZ,BOBBIN CORE	TK2058	TSL0807–101KR75
A15A1L201	108–0958–00			INDUCTOR,FXD:CUSTOM,POWER;50UH,10%,IDC<3 A,RDC<0.027 OHM,BOBBIN 276–0240–00,30.5T W/20	0JR03	108–0958–00
A15A1L202	108–0958–00			INDUCTOR,FXD:CUSTOM,POWER;50UH,10%,IDC<3 A,RDC<0.027 OHM,BOBBIN 276–0240–00,30.5T W/20	0JR03	108–0958–00
A15A1L210	108–1263–00			INDUCTOR,FXD:POWER;10UH,10%,I<2.1A,RDC<0.043 OHM,Q>20,SRF>19MHZ,BOBBIN	TK2058	TSL0707–100K1R9
A15A1L211	108–1263–00			INDUCTOR,FXD:POWER;10UH,10%,I<2.1A,RDC<0.043 OHM,Q>20,SRF>19MHZ,BOBBIN	TK2058	TSL0707–100K1R9

Replaceable Electrical Parts List (Cont.)

Component Number	Tektronix Part Number	Serial No. Effective	Serial No. Discont'd	Name & Description	Mfr. Code	Mfr. Part Number
A15A1L212	276–0635–00			CORE,EM:TOROID;FERRITE,UO=5,000 20% (1KHZ) (MUST BE REPLACED WITH PART # 177–0685–00).	02114	768 T188/3E2A
A15A1L213	108–0554–00			INDUCTOR,FXD:CUSTOM,POWER;5UH,20%,I<7A,RDC< 0.01 OHM,ROD CORE 276–0147–00	0JR03	108–0554–00
A15A1L214	108–0958–00			INDUCTOR,FXD:CUSTOM,POWER;50UH,10%,IDC<3 A, RDC<0.027 OHM,BOBBIN 276–0240–00,30.5T W/20	0JR03	108–0958–00
A15A1L215	108–1263–00			INDUCTOR,FXD:POWER;10UH,10%,I<2.1A,RDC<0.043 OHM,Q>20,SRF>19MHZ,BOBBIN	TK2058	TSL0707–100K1R9
A15A1L216	108–1442–00			INDUCTOR,FXD:SIGNAL;10UH,20%,TOROID CORE 276–0603–00	0JR03	108–1442–00
A15A1L217	108–1442–00			INDUCTOR,FXD:SIGNAL;10UH,20%,TOROID CORE 276–0603–00	0JR03	108–1442–00
A15A1L241	108–0828–00			INDUCTOR,FXD:CUSTOM,POWER;56.4UH,IDC<3.2 A, RDC<0.017 OHM,TOROID CORE 276–0603–00,TD–565	0JR03	108–0828–00
A15A1L250	108–0828–00			INDUCTOR,FXD:CUSTOM,POWER;56.4UH,IDC<3.2 A, RDC<0.017 OHM,TOROID CORE 276–0603–00,TD–565	0JR03	108–0828–00
A15A1L310	108–1262–00			INDUCTOR,FXD:POWER;100UH,10%,I<0.75A,RDC<0.23 OHM,Q>15,SRF>5.4MHZ,BOBBIN CORE	TK2058	TSL0807–101KR75
A15A1L320	108–1262–00			INDUCTOR,FXD:POWER;100UH,10%,I<0.75A,RDC<0.23 OHM,Q>15,SRF>5.4MHZ,BOBBIN CORE	TK2058	TSL0807–101KR75
A15A1L330	108–1442–00			INDUCTOR,FXD:SIGNAL;10UH,20%,TOROID CORE 276–0603–00	0JR03	108–1442–00
A15A1Q130	151–0678–00		B033899	TRANSISTOR,PWR:BIPOLAR,NPN;400V,4.0A,SWITCHING	04713	MJE13005
A15A1Q130	151–1088–00	B033900		TRANSISTOR,PWR:MOS,N–CH;600V,1.0A,12 OHM		
A15A1Q250	151–1137–00			TRANSISTOR,PWR:MOS,N–CH,200V,9.0A,0.4 OHM,IRF630,TO–220 W/FORMED LEADS	04713	STP4064LFCF
A15A1Q251	151–1137–00			TRANSISTOR,PWR:MOS,N–CH,200V,9.0A,0.4 OHM,IRF630,TO–220 W/FORMED LEADS	04713	STP4064LFCF
A15A1Q400	151–0619–00			TRANSISTOR,SIG:BIPOLAR,NPN;35V,20MA,SUPERMATCHED DUAL	24355	MATO2EH
A15A1Q410	151–0619–00			TRANSISTOR,SIG:BIPOLAR,NPN;35V,20MA,SUPERMATCHED DUAL	24355	MATO2EH
A15A1Q610	151–5000–00			TRANSISTOR,SIG:BIPOLAR,PNP;40V,200MA,250MHZ AMPLIFIER	0LUA3	PMBT3906TRL
A15A1Q611	151–5006–00			TRANSISTOR,SIG:BIPOLAR,NPN;300V,50MA,50MHZ, AMPLIFIER	0LUA3	BF620
A15A1Q680	151–5000–00			TRANSISTOR,SIG:BIPOLAR,PNP;40V,200MA,250MHZ AMPLIFIER	0LUA3	PMBT3906TRL
A15A1Q690	151–5001–00			TRANSISTOR,SIG:BIPOLAR,NPN;40V,200MA,300MHZ AMPLIFIER	0LUA3	PMBT3904TRL
A15A1Q691	151–5000–00			TRANSISTOR,SIG:BIPOLAR,PNP;40V,200MA,250MHZ, AMPLIFIER	0LUA3	PMBT3906TRL
A15A1Q700	151–5006–00			TRANSISTOR,SIG:BIPOLAR,NPN;300V,50MA,50MHZ, AMPLIFIER	0LUA3	BF620
A15A1Q720	151–5006–00			TRANSISTOR,SIG:BIPOLAR,NPN;300V,50MA,50MHZ, AMPLIFIER	0LUA3	BF620
A15A1Q751	151–5002–00			TRANSISTOR,SIG:JFET,N–CH;5V,75MA,60 OHM,SWI TCH	04713	MMBF4392LT1
A15A1Q752	151–5001–00			TRANSISTOR,SIG:BIPOLAR,NPN;40V,200MA,300MHZ AMPLIFIER	0LUA3	PMBT3904TRL

Replaceable Electrical Parts List (Cont.)

Component Number	Tektronix Part Number	Serial No. Effective	Serial No. Discont'd	Name & Description	Mfr. Code	Mfr. Part Number
A15A1Q753	151–5000–00			TRANSISTOR,SIG:BIPOLAR,PNP;40V,200MA,250MHZ AMPLIFIER	0LUA3	PMBT3906TRL
A15A1Q800	151–5006–00			TRANSISTOR,SIG:BIPOLAR,NPN;300V,50MA,50MHZ, AMPLIFIER	0LUA3	BF620
A15A1Q801	151–5006–00			TRANSISTOR,SIG:BIPOLAR,NPN;300V,50MA,50MHZ, AMPLIFIER	0LUA3	BF620
A15A1Q811	151–5006–00			TRANSISTOR,SIG:BIPOLAR,NPN;300V,50MA,50MHZ, AMPLIFIER	0LUA3	BF620
A15A1Q812	151–5006–00			TRANSISTOR,SIG:BIPOLAR,NPN;300V,50MA,50MHZ, AMPLIFIER	0LUA3	BF620
A15A1Q820	151–5006–00			TRANSISTOR,SIG:BIPOLAR,NPN;300V,50MA,50MHZ, AMPLIFIER	0LUA3	BF620
A15A1Q900	151–5001–00			TRANSISTOR,SIG:BIPOLAR,NPN;40V,200MA,300MHZ AMPLIFIER	0LUA3	PMBT3904TRL
A15A1Q901	151–5001–00			TRANSISTOR,SIG:BIPOLAR,NPN;40V,200MA,300MHZ AMPLIFIER	0LUA3	PMBT3904TRL
A15A1Q922	151–5001–00			TRANSISTOR,SIG:BIPOLAR,NPN;40V,200MA,300MHZ AMPLIFIER	0LUA3	PMBT3904TRL
A15A1Q923	151–5001–00			TRANSISTOR,SIG:BIPOLAR,NPN;40V,200MA,300MHZ AMPLIFIER	0LUA3	PMBT3904TRL
A15A1Q924	151–5000–00			TRANSISTOR,SIG:BIPOLAR,PNP;40V,200MA,250MHZ AMPLIFIER	0LUA3	PMBT3906TRL
A15A1Q925	151–5001–00			TRANSISTOR,SIG:BIPOLAR,NPN;40V,200MA,300MHZ AMPLIFIER	0LUA3	PMBT3904TRL
A15A1Q930	151–5000–00			TRANSISTOR,SIG:BIPOLAR,PNP;40V,200MA,250MHZ AMPLIFIER	0LUA3	PMBT3906TRL
A15A1R110	311–1968–00			RES,VAR,NONWW:PNL,5M OHM,20%,0.5W	12697	72M4N048S505M
A15A1R120	315–0625–00			RES,FXD,FILM:6.2M OHM,5%,0.25W	TK1727	SFR25 2322–181
A15A1R151	308–0236–00			RES,FXD,WW:85 OHM,5%,3W	00213	1240S–85 OHM 5
A15A1R152	301–0273–00			RES,FXD,FILM:27K OHM,5%,0.5W	TK1727	SFR30 2322–182
A15A1R170	301–0474–00			RES,FXD,FILM:470K OHM,5%,0.5W	TK1727	SFR30 2322–182
A15A1R185	303–0154–00			RES,FXD,CMPSN:150K OHM,5%,1W	24546	FP1 150 K OHM 5
A15A1R240	308–0399–01			RES,FXD,WW:10 OHM,5%,5W	91637	CW5–10ROJ–BULK
A15A1R250	308–0236–00			RES,FXD,WW:85 OHM,5%,3W	00213	1240S–85 OHM 5
A15A1R260	308–0643–00			RES,FXD,WW:0.10 OHM,3%,3W	TK2096	KM300 0.1 OHM +
A15A1R261	308–0292–00		B033899	RES,FXD,WW:2.2K OHM,5%,3W	91637	CW–2B 2.2K 5 PE
A15A1R261	308–0281–00	B033900		RES,FXD,WW:1.8K OHM,5%,3W	09969	FP69 1.8K 5%
A15A1R500	321–5049–00			RES,FXD:THICK FILM;1M OHM,1%,0.125W,TC=100 PPM	57668	MCR18FXEA1M
A15A1R501	321–5049–00			RES,FXD:THICK FILM;1M OHM,1%,0.125W,TC=100 PPM	57668	MCR18FXEA1M
A15A1R502	321–5049–00			RES,FXD:THICK FILM;1M OHM,1%,0.125W,TC=100 PPM	57668	MCR18FXEA1M
A15A1R503	321–5049–00			RES,FXD:THICK FILM;1M OHM,1%,0.125W,TC=100 PPM	57668	MCR18FXEA1M
A15A1R504	321–5049–00			RES,FXD:THICK FILM;1M OHM,1%,0.125W,TC=100 PPM	57668	MCR18FXEA1M
A15A1R505	321–5049–00			RES,FXD:THICK FILM;1M OHM,1%,0.125W,TC=100 PPM	57668	MCR18FXEA1M
A15A1R506	321–5049–00			RES,FXD:THICK FILM;1M OHM,1%,0.125W,TC=100 PPM	57668	MCR18FXEA1M

Replaceable Electrical Parts List (Cont.)

Component Number	Tektronix Part Number	Serial No. Effective	Serial No. Discont'd	Name & Description	Mfr. Code	Mfr. Part Number
A15A1R507	321–5049–00			RES,FXD:THICK FILM;1M OHM,1%,0.125W,TC=100 PPM	57668	MCR18FXEA1M
A15A1R508	321–5049–00			RES,FXD:THICK FILM;1M OHM,1%,0.125W,TC=100 PPM	57668	MCR18FXEA1M
A15A1R509	321–5049–00			RES,FXD:THICK FILM;1M OHM,1%,0.125W,TC=100 PPM	57668	MCR18FXEA1M
A15A1R510	321–5027–00			RES,FXD:THICK FILM;5.62K OHM,1%,0.125W,TC=100 PPM	50139	BCK5621FT
A15A1R511	321–5027–00			RES,FXD:THICK FILM;5.62K OHM,1%,0.125W,TC=100 PPM	50139	BCK5621FT
A15A1R520	321–5016–00			RES,FXD:THICK FILM;681 OHM,1%,0.125W,TC=100 PPM	50139	BCK6810FT
A15A1R521	321–5004–00			RES,FXD:THICK FILM;22.1 OHM,1%,0.125W,TC=100 PPM	57668	MCR18FWEA22E1
A15A1R522	321–5004–00			RES,FXD:THICK FILM;22.1 OHM,1%,0.125W,TC=100 PPM	57668	MCR18FWEA22E1
A15A1R531	321–5041–00			RES,FXD:THICK FILM;82.5K OHM,1%,0.125W,TC=100 PPM	50139	BCK8252FT
A15A1R532	321–5041–00			RES,FXD:THICK FILM;82.5K OHM,1%,0.125W,TC=100 PPM	50139	BCK8252FT
A15A1R534	321–5030–00			RES,FXD:THICK FILM;10.0K OHM,1%,0.125W,TC=100 PPM	50139	BCK1002FT
A15A1R535	321–5010–00			RES,FXD:THICK FILM;221 OHM,1%,0.125W,TC=100 PPM	50139	BCK221FT
A15A1R536	321–5010–00			RES,FXD:THICK FILM;221 OHM,1%,0.125W,TC=100 PPM	50139	BCK221FT
A15A1R537	321–5010–00			RES,FXD:THICK FILM;221 OHM,1%,0.125W,TC=100 PPM	50139	BCK221FT
A15A1R550	321–5000–00		B023706	RES,FXD:THICK FILM;10 OHM,1%,0.125W,TC=100 PPM	59124	RK73H2B10R0FT
A15A1R550A	321–5487–00	B023707	B033899	RES,FXD:THICK FILM,22.6 OHM, 1%,0.250W, TC=100PPM,1210,T&R,SMD	09969	CRCW1210–22R6F RT2
A15A1R550B	321–5487–00	B023707	B033899	RES,FXD:THICK FILM,22.6 OHM, 1%,0.250W, TC=100PPM,1210,T&R,SMD	09969	CRCW1210–22R6F RT2
A15A1R550	321–5523–00	B033900		RES,FXD,FILM:THICK FILM,22 OHM,5%,800MW,200V	56845	RCWP2010–6
A15A1R551	321–5000–00		B023706	RES,FXD:THICK FILM;10 OHM,1%,0.125W	91637	CRCW120610R0FT
A15A1R551A	321–5487–00	B023707	B033899	RES,FXD:THICK FILM,22.6 OHM, 1%,0.250W, TC=100PPM,1210,T&R,SMD	09969	CRCW1210–22R6F RT2
A15A1R551B	321–5487–00	B023707	B033899	RES,FXD:THICK FILM,22.6 OHM, 1%,0.250W, TC=100PPM,1210,T&R,SMD	09969	CRCW1210–22R6F RT2
A15A1R551	321–5523–00	B033900		RES,FXD,FILM:THICK FILM,22 OHM,5%,800MW,200V	56845	RCWP2010–6
A15A1R552	321–5523–00	B033900		RES,FXD,FILM:THICK FILM,22 OHM,5%,800MW,200V	56845	RCWP2010–6
A15A1R553	321–5523–00	B033900		RES,FXD,FILM:THICK FILM,22 OHM,5%,800MW,200V	56845	RCWP2010–6
A15A1R570	321–5000–00		B023706	RES,FXD:THICK FILM;10 OHM,1%,0.125W,TC=100 PPM	59124	RK73H2B10R0FT
A15A1R570A	321–5487–00	B023707	B033899	RES,FXD:THICK FILM,22.6 OHM, 1%,0.250W, TC=100PPM,1210,T&R,SMD	09969	CRCW1210–22R6F RT2
A15A1R570B	321–5487–00	B023707	B033899	RES,FXD:THICK FILM,22.6 OHM, 1%,0.250W, TC=100PPM,1210,T&R,SMD	09969	CRCW1210–22R6F RT2
A15A1R570	321–5523–00	B033900		RES,FXD,FILM:THICK FILM,22 OHM,5%,800MW,200V	56845	RCWP2010–6
A15A1R571	321–5000–00		B033899	RES,FXD:THICK FILM;10 OHM,1%,0.125W	91637	CRCW120610R0FT
A15A1R571	321–5523–00	B033900		RES,FXD,FILM:THICK FILM,22 OHM,5%,800MW,200V	56845	RCWP2010–6
A15A1R600	321–5017–00			RES,FXD:THICK FILM;825 OHM,1%,0.125W,TC=100 PPM	50139	BCK8250FT
A15A1R601	321–5017–00			RES,FXD:THICK FILM;825 OHM,1%,0.125W,TC=100 PPM	50139	BCK8250FT
A15A1R602	321–5017–00			RES,FXD:THICK FILM;825 OHM,1%,0.125W,TC=100 PPM	50139	BCK8250FT
A15A1R603	321–5017–00			RES,FXD:THICK FILM;825 OHM,1%,0.125W,TC=100 PPM	50139	BCK8250FT
A15A1R604	321–5026–00			RES,FXD:THICK FILM;4.75K OHM,1%,0.125W,TC=100 PPM	50139	BCK4751FT

Replaceable Electrical Parts List (Cont.)

Component Number	Tektronix Part Number	Serial No. Effective	Serial No. Discont'd	Name & Description	Mfr. Code	Mfr. Part Number
A15A1R605	321–5044–00			RES,FXD:THICK FILM;56.2 OHM,1%,0.125W,TC=100 PPM	50139	BCD56R2FT
A15A1R606	321–5022–00		B034199	RES,FXD:THICK FILM;2.21K OHM,1%,0.125W,TC=100 PPM	50139	BCK2211FT
A15A1R606	321–5018–00	B044200		RES,FXD:THICK FILM,1.0K OHM,1%,0.125W,TC=100 PPM,1206,T&R	50139	BCK1001FT
A15A1R610	321–5010–00			RES,FXD:THICK FILM;221 OHM,1%,0.125W,TC=100 PPM	50139	BCK221FT
A15A1R611	321–5022–00		B034199	RES,FXD:THICK FILM;2.21K OHM,1%,0.125W,TC=100 PPM	50139	BCK2211FT
A15A1R611	321–5025–00	B044200		RES,FXD:THICK FILM,3.92K OHM,1%,0.125W,TC=100 PPM,1206,T&R,	50139	BCK3921FT
A15A1R612	321–5022–00		B034199	RES,FXD:THICK FILM;2.21K OHM,1%,0.125W,TC=100 PPM	50139	BCK2211FT
A15A1R612	321–5025–00	B044200		RES,FXD:THICK FILM,3.92K OHM,1%,0.125W,TC=100 PPM,1206,T&R,	50139	BCK3921FT
A15A1R613	321–5010–00			RES,FXD:THICK FILM;221 OHM,1%,0.125W,TC=100 PPM	50139	BCK221FT
A15A1R614	321–5006–00			RES,FXD:THICK FILM;100 OHM,1%,0.125W,TC=100 PPM	50139	BCK1000FT
A15A1R615	321–5019–00			RES,FXD:THICK FILM;1.21K OHM,1%,0.125W,TC=100 PPM	50139	BCK1211FT
A15A1R616	321–5018–00			RES,FXD:THICK FILM;1.0K OHM,1%,0.125W,TC=100 PPM	50139	BCK1001FT
A15A1R617	321–5025–00			RES,FXD:THICK FILM;3.92K OHM,1%,0.125W,TC=100 PPM	50139	BCK3921FT
A15A1R618	321–5010–00			RES,FXD:THICK FILM;221 OHM,1%,0.125W,TC=100 PPM	50139	BCK221FT
A15A1R620	321–5047–00			RES,FXD:THICK FILM;100K OHM,1%,0.125W,TC=100 PPM	50139	BCK1003FT
A15A1R630	321–5043–00			RES,FXD:THICK FILM;47.5 OHM,1%,0.125W,TC=100 PPM	57668	MCR18FWEA47E5
A15A1R631	321–5020–00			RES,FXD:THICK FILM;1.5K OHM,1%,0.125W,TC=100 PPM	50139	BCK1501FT
A15A1R632	321–5043–00			RES,FXD:THICK FILM;47.5 OHM,1%,0.125W,TC=100 PPM	57668	MCR18FWEA47E5
A15A1R633	321–5040–00			RES,FXD:THICK FILM;68.1K OHM,1%,0.125W,TC=100 PPM	50139	BCK6812FT
A15A1R634	321–5030–00			RES,FXD:THICK FILM;10.0K OHM,1%,0.125W,TC=100 PPM	50139	BCK1002FT
A15A1R635	321–5049–00			RES,FXD:THICK FILM;1M OHM,1%,0.125W,TC=100 PPM	57668	MCR18FXEA1M
A15A1R636	321–5036–00			RES,FXD:THICK FILM;33.2K OHM,1%,0.125W,TC=100 PPM	50139	BCK3322FT
A15A1R637	321–5016–00			RES,FXD:THICK FILM;681 OHM,1%,0.125W,TC=100 PPM	50139	BCK6810FT
A15A1R638	321–5043–00			RES,FXD:THICK FILM;47.5 OHM,1%,0.125W,TC=100 PPM	57668	MCR18FWEA47E5
A15A1R639	311–2234–00			RES,VAR,TRMR:CERMET;5K OHM,20%,0.5W,0.197 SQ,TOP ADJUST	TK2073	GF06UT2 502 M L
A15A1R650	321–5043–00			RES,FXD:THICK FILM;47.5 OHM,1%,0.125W,TC=100 PPM	57668	MCR18FWEA47E5
A15A1R651	321–5043–00			RES,FXD:THICK FILM;47.5 OHM,1%,0.125W,TC=100 PPM	57668	MCR18FWEA47E5
A15A1R652	321–5047–00		B033899	RES,FXD:THICK FILM;100K OHM,1%,0.125W,TC=100 PPM	50139	BCK1003FT
A15A1R652	321–5030–00	B033900		RES,FXD:THICK FILM,10.0K OHM,1%,0.125W,TC=100 PPM,1206,T&R	50139	BCK1002FT
A15A1R660	321–5000–00			RES,FXD:THICK FILM;10 OHM,1%,0.125W,TC=100 PPM	59124	RK73H2B10R0FT
A15A1R661	321–5018–00			RES,FXD:THICK FILM;1.0K OHM,1%,0.125W,TC=100 PPM	50139	BCK1001FT
A15A1R663	321–5018–00			RES,FXD:THICK FILM;1.0K OHM,1%,0.125W,TC=100 PPM	50139	BCK1001FT
A15A1R664	321–5034–00			RES,FXD:THICK FILM;22.1K OHM,1%,0.125W,TC=100 PPM	50139	BCK2212FT
A15A1R666	321–5037–00		B023533	RES,FXD:THICK FILM;39.2K OHM,1%,0.125W,TC=100 PPM	50139	BCK3922FT
A15A1R666	321–5031–00	B023534	B033899	RES,FXD:THICK FILM;12.1K OHM,1%,0.125W	50139	BCK3922FT
A15A1R666	321–5034–00	B033900		RES,FXD:THICK FILM,22.1K OHM,1%,0.125W,TC=100 PPM,1206,T&R	50139	BCK2212FT

Replaceable Electrical Parts List (Cont.)

Component Number	Tektronix Part Number	Serial No. Effective	Serial No. Discont'd	Name & Description	Mfr. Code	Mfr. Part Number
A15A1R667	321–5028–00			RES,FXD:THICK FILM;6.81K OHM,1%,0.125W,TC=100 PPM	50139	BCK6811FT
A15A1R668	321–5017–00	B033900		RES,FXD:THICK FILM,825 OHM,1%,0.125W,TC=100 PPM,1206,T&R	50139	BCK8250FT
A15A1R669	311–2231–00	B033900		RES,VAR,TRMR:CERMET,1K OHM,20%,0.5W,0.197 SQ,TOP ADJUST	TK2073	GF06UT2 102 M L20
A15A1R670	321–5030–00			RES,FXD:THICK FILM;10.0K OHM,1%,0.125W,TC=100 PPM	50139	BCK1002FT
A15A1R671	321–5034–00			RES,FXD:THICK FILM;22.1K OHM,1%,0.125W,TC=100 PPM	50139	BCK2212FT
A15A1R672	321–5000–00			RES,FXD:THICK FILM;10 OHM,1%,0.125W,TC=100 PPM	59124	RK73H2B10R0FT
A15A1R680	311–2236–00			RES,VAR,TRMR:CERMET,20K OHM,20%,0.5W,0.197 SQ,SIDE ADJUST	TK2073	GF06UT2 203 M L
A15A1R681	321–5034–00			RES,FXD:THICK FILM;22.1K OHM,1%,0.125W,TC=100 PPM	50139	BCK2212FT
A15A1R682	321–5047–00			RES,FXD:THICK FILM;100K OHM,1%,0.125W,TC=100 PPM	50139	BCK1003FT
A15A1R683	321–5030–00			RES,FXD:THICK FILM;10.0K OHM,1%,0.125W,TC=100 PPM	50139	BCK1002FT
A15A1R684	321–5034–00			RES,FXD:THICK FILM;22.1K OHM,1%,0.125W,TC=100 PPM	50139	BCK2212FT
A15A1R686	321–5031–00			RES,FXD:THICK FILM;12.1K OHM,1%,0.125W,TC=100 PPM	50139	BCK1212FT
A15A1R687	321–5024–00			RES,FXD:THICK FILM;3.32K OHM,1%,0.125W,TC=100 PPM	50139	BCK3321FT
A15A1R688	321–5010–00			RES,FXD:THICK FILM;221 OHM,1%,0.125W,TC=100 PPM	50139	BCK221FT
A15A1R689	321–5030–00			RES,FXD:THICK FILM;10.0K OHM,1%,0.125W,TC=100 PPM	50139	BCK1002FT
A15A1R690	321–5013–00			RES,FXD:THICK FILM;392 OHM,1%,0.125W,TC=100 PPM	50139	BCK3920FT
A15A1R691	321–5018–00			RES,FXD:THICK FILM;1.0K OHM,1%,0.125W,TC=100 PPM	50139	BCK1001FT
A15A1R693	321–5027–00		B023534	RES,FXD:THICK FILM;5.62K OHM,1%,0.125W,TC=100 PPM	50139	BCK5621FT
A15A1R693	321–5145–00	B023533	B033899	RES,FXD:THICK FILM;3.32K OHM,1%,0.125W	50139	BCK5621FT
A15A1R693	321–5030–00	B033900		RES,FXD:THICK FILM,10.0K OHM,1%,0.125W,TC=100 PPM,1206,T&R	50139	BCK1002FT
A15A1R694	321–5037–00			RES,FXD:THICK FILM;39.2K OHM,1%,0.125W,TC=100 PPM	50139	BCK3922FT
A15A1R695	321–5047–00			RES,FXD:THICK FILM;100K OHM,1%,0.125W,TC=100 PPM	50139	BCK1003FT
A15A1R696	321–5047–00			RES,FXD:THICK FILM;100K OHM,1%,0.125W,TC=100 PPM	50139	BCK1003FT
A15A1R697	321–5047–00			RES,FXD:THICK FILM;100K OHM,1%,0.125W,TC=100 PPM	50139	BCK1003FT
A15A1R698	321–5047–00			RES,FXD:THICK FILM;100K OHM,1%,0.125W,TC=100 PPM	50139	BCK1003FT
A15A1R699	321–5047–00			RES,FXD:THICK FILM;100K OHM,1%,0.125W,TC=100 PPM	50139	BCK1003FT
A15A1R700	321–5044–00			RES,FXD:THICK FILM;56.2 OHM,1%,0.125W,TC=100 PPM	50139	BCD56R2FT
A15A1R701	321–5034–00		B034199	RES,FXD:THICK FILM;22.1K OHM,1%,0.125W,TC=100 PPM	50139	BCK2212FT
A15A1R701	321–5031–00	B044200		RES,FXD:THICK FILM,12.1K OHM,1%,0.125W	50139	BCK1212FT
A15A1R702	321–5024–00			RES,FXD:THICK FILM;3.32K OHM,1%,0.125W,TC=100 PPM	50139	BCK3321FT
A15A1R703	311–1235–00			RES,VAR,NONWW:100K OHM,0.5W	32997	3386F–1–104
A15A1R704	311–1235–00			RES,VAR,NONWW:100K OHM,0.5W	32997	3386F–1–104
A15A1R705	311–1235–00			RES,VAR,NONWW:100K OHM,0.5W	32997	3386F–1–104
A15A1R706	321–5037–00		B034199	RES,FXD:THICK FILM;39.2K OHM,1%,0.125W,TC=100 PPM	50139	BCK3922FT
A15A1R706	321–5035–00	B044200		RES,FXD:THICK FILM,27.4K OHM,1%,0.125W	50139	BCK2742FT
A15A1R707	321–5018–00			RES,FXD:THICK FILM;1.0K OHM,1%,0.125W,TC=100 PPM	50139	BCK1001FT
A15A1R709	321–5022–00			RES,FXD:THICK FILM;2.21K OHM,1%,0.125W,TC=100 PPM	50139	BCK2211FT

Replaceable Electrical Parts List (Cont.)

Component Number	Tektronix Part Number	Serial No. Effective	Serial No. Discont'd	Name & Description	Mfr. Code	Mfr. Part Number
A15A1R710	321–5014–00			RES,FXD:THICK FILM;475 OHM,1%,0.125W,TC=100 PPM	50139	BCK4750FT
A15A1R711	321–5028–00			RES,FXD:THICK FILM;6.81K OHM,1%,0.125W,TC=100 PPM	50139	BCK6811FT
A15A1R712	321–5006–00			RES,FXD:THICK FILM;100 OHM,1%,0.125W,TC=100 PPM	50139	BCK1000FT
A15A1R713	321–5006–00			RES,FXD:THICK FILM;100 OHM,1%,0.125W,TC=100 PPM	50139	BCK1000FT
A15A1R714	321–5018–00			RES,FXD:THICK FILM;1.0K OHM,1%,0.125W,TC=100 PPM	50139	BCK1001FT
A15A1R720	321–5041–00			RES,FXD:THICK FILM;82.5K OHM,1%,0.125W,TC=100 PPM	50139	BCK8252FT
A15A1R721	321–5047–00			RES,FXD:THICK FILM;100K OHM,1%,0.125W,TC=100 PPM	50139	BCK1003FT
A15A1R722	321–5030–00			RES,FXD:THICK FILM;10.0K OHM,1%,0.125W,TC=100 PPM	50139	BCK1002FT
A15A1R723	321–5030–00			RES,FXD:THICK FILM;10.0K OHM,1%,0.125W,TC=100 PPM	50139	BCK1002FT
A15A1R730	321–5032–00			RES,FXD:THICK FILM;15.0K OHM,1%,0.125W,TC=100 PPM	50139	BCK1502FT
A15A1R731	321–5032–00			RES,FXD:THICK FILM;15.0K OHM,1%,0.125W,TC=100 PPM	50139	BCK1502FT
A15A1R732	321–5030–00			RES,FXD:THICK FILM;10.0K OHM,1%,0.125W,TC=100 PPM	50139	BCK1002FT
A15A1R733	321–5030–00			RES,FXD:THICK FILM;10.0K OHM,1%,0.125W,TC=100 PPM	50139	BCK1002FT
A15A1R741	321–5018–00			RES,FXD:THICK FILM;1.0K OHM,1%,0.125W,TC=100 PPM	50139	BCK1001FT
A15A1R750	321–5047–00			RES,FXD:THICK FILM;100K OHM,1%,0.125W,TC=100 PPM	50139	BCK1003FT
A15A1R752	321–5018–00			RES,FXD:THICK FILM;1.0K OHM,1%,0.125W,TC=100 PPM	50139	BCK1001FT
A15A1R754	321–5047–00			RES,FXD:THICK FILM;100K OHM,1%,0.125W,TC=100 PPM	50139	BCK1003FT
A15A1R761	321–5030–00		B023534	RES,FXD:THICK FILM;10.0K OHM,1%,0.125W,TC=100 PPM	50139	BCK1002FT
A15A1R761	321–5024–00	B023533	B033899	RES,FXD:THICK FILM,3.32K OHM,1%,0.125W,TC=100 PPM,1206,T&R	50139	BCK4751FT
A15A1R761	321–5026–00	B033900		RES,FXD:THICK FILM,4.75K OHM,1%,0.125W,TC=100 PPM,1206,T&R	50139	BCK4751FT
A15A1R762	321–5030–00			RES,FXD:THICK FILM;10.0K OHM,1%,0.125W,TC=100 PPM	50139	BCK1002FT
A15A1R763	321–5026–00			RES,FXD:THICK FILM;4.75K OHM,1%,0.125W,TC=100 PPM	50139	BCK4751FT
A15A1R770	321–5018–00			RES,FXD:THICK FILM;1.0K OHM,1%,0.125W,TC=100 PPM	50139	BCK1001FT
A15A1R771	321–5018–00			RES,FXD:THICK FILM;1.0K OHM,1%,0.125W,TC=100 PPM	50139	BCK1001FT
A15A1R772	321–5000–00			RES,FXD:THICK FILM;10 OHM,1%,0.125W,TC=100 PPM	59124	RK73H2B10R0FT
A15A1R780	321–5032–00			RES,FXD:THICK FILM;15.0K OHM,1%,0.125W,TC=100 PPM	50139	BCK1502FT
A15A1R781	321–5030–00			RES,FXD:THICK FILM;10.0K OHM,1%,0.125W,TC=100 PPM	50139	BCK1002FT
A15A1R782	321–5019–00			RES,FXD:THICK FILM;1.21K OHM,1%,0.125W,TC=100 PPM	50139	BCK1211FT
A15A1R790	321–5024–00			RES,FXD:THICK FILM;3.32K OHM,1%,0.125W,TC=100 PPM	50139	BCK3321FT
A15A1R791	321–5028–00			RES,FXD:THICK FILM;6.81K OHM,1%,0.125W,TC=100 PPM	50139	BCK6811FT
A15A1R800	321–5025–00			RES,FXD:THICK FILM;3.92K OHM,1%,0.125W,TC=100 PPM	50139	BCK3921FT
A15A1R801	321–5025–00			RES,FXD:THICK FILM;3.92K OHM,1%,0.125W,TC=100 PPM	50139	BCK3921FT
A15A1R802	321–5020–00			RES,FXD:THICK FILM;1.5K OHM,1%,0.125W,TC=100 PPM	50139	BCK1501FT
A15A1R803	321–5020–00			RES,FXD:THICK FILM;1.5K OHM,1%,0.125W,TC=100 PPM	50139	BCK1501FT
A15A1R804	321–5020–00			RES,FXD:THICK FILM;1.5K OHM,1%,0.125W,TC=100 PPM	50139	BCK1501FT
A15A1R805	321–5020–00			RES,FXD:THICK FILM;1.5K OHM,1%,0.125W,TC=100 PPM	50139	BCK1501FT
A15A1R806	321–5020–00			RES,FXD:THICK FILM;1.5K OHM,1%,0.125W,TC=100 PPM	50139	BCK1501FT
A15A1R807	321–5010–00			RES,FXD:THICK FILM;221 OHM,1%,0.125W,TC=100 PPM	50139	BCK221FT
A15A1R808	321–5006–00			RES,FXD:THICK FILM;100 OHM,1%,0.125W,TC=100 PPM	50139	BCK1000FT
A15A1R809	321–5010–00			RES,FXD:THICK FILM;221 OHM,1%,0.125W,TC=100 PPM	50139	BCK221FT

Replaceable Electrical Parts List (Cont.)

Component Number	Tektronix Part Number	Serial No. Effective	Serial No. Discont'd	Name & Description	Mfr. Code	Mfr. Part Number
A15A1R810	321–5004–00			RES,FXD:THICK FILM;22.1 OHM,1%,0.125W,TC=100 PPM	57668	MCR18FWEA22E1
A15A1R811	321–5004–00			RES,FXD:THICK FILM;22.1 OHM,1%,0.125W,TC=100 PPM	57668	MCR18FWEA22E1
A15A1R812	321–5020–00			RES,FXD:THICK FILM;1.5K OHM,1%,0.125W,TC=100 PPM	50139	BCK1501FT
A15A1R813	321–5020–00			RES,FXD:THICK FILM;1.5K OHM,1%,0.125W,TC=100 PPM	50139	BCK1501FT
A15A1R814	321–5020–00			RES,FXD:THICK FILM;1.5K OHM,1%,0.125W,TC=100 PPM	50139	BCK1501FT
A15A1R815	321–5020–00			RES,FXD:THICK FILM;1.5K OHM,1%,0.125W,TC=100 PPM	50139	BCK1501FT
A15A1R816	321–5020–00			RES,FXD:THICK FILM;1.5K OHM,1%,0.125W,TC=100 PPM	50139	BCK1501FT
A15A1R817	321–5011–00			RES,FXD:THICK FILM;274 OHM,1%,0.125W,TC=100 PPM	50139	BCK2740FT
A15A1R818	321–5025–00			RES,FXD:THICK FILM;3.92K OHM,1%,0.125W,TC=100 PPM	50139	BCK3921FT
A15A1R819	321–5006–00			RES,FXD:THICK FILM;100 OHM,1%,0.125W,TC=100 PPM	50139	BCK1000FT
A15A1R820	321–5038–00			RES,FXD:THICK FILM;47.5K OHM,1%,0.125W,TC=100 PPM	50139	BCK4752FT
A15A1R821	321–5006–00			RES,FXD:THICK FILM;100 OHM,1%,0.125W,TC=100 PPM	50139	BCK1000FT
A15A1R822	321–5006–00			RES,FXD:THICK FILM;100 OHM,1%,0.125W,TC=100 PPM	50139	BCK1000FT
A15A1R823	321–5038–00			RES,FXD:THICK FILM;47.5K OHM,1%,0.125W,TC=100 PPM	50139	BCK4752FT
A15A1R824	321–5012–00			RES,FXD:THICK FILM;332 OHM,1%,0.125W,TC=100 PPM	50139	BCK3320FT
A15A1R825	321–5012–00			RES,FXD:THICK FILM;332 OHM,1%,0.125W,TC=100 PPM	50139	BCK3320FT
A15A1R826	321–5012–00			RES,FXD:THICK FILM;332 OHM,1%,0.125W,TC=100 PPM	50139	BCK3320FT
A15A1R828	321–5051–00	B033900	B034199	RES,FXD:THICK FILM,0 OHM,1%,0.125W,TC=100 PPM,1206	09969	CRCW1206 JUMPER
A15A1R828	321–5048–00	B044200		RES,FXD:THICK FILM,332K OHM,1%,0.125W	50139	BCK3323FT
A15A1R830	321–5012–00			RES,FXD:THICK FILM;332 OHM,1%,0.125W,TC=100 PPM	50139	BCK3320FT
A15A1R831	321–5012–00			RES,FXD:THICK FILM;332 OHM,1%,0.125W,TC=100 PPM	50139	BCK3320FT
A15A1R832	321–5004–00			RES,FXD:THICK FILM;22.1 OHM,1%,0.125W,TC=100 PPM	57668	MCR18FWEA22E1
A15A1R833	321–5038–00			RES,FXD:THICK FILM;47.5K OHM,1%,0.125W,TC=100 PPM	50139	BCK4752FT
A15A1R834	321–5012–00			RES,FXD:THICK FILM;332 OHM,1%,0.125W,TC=100 PPM	50139	BCK3320FT
A15A1R835	321–5012–00			RES,FXD:THICK FILM;332 OHM,1%,0.125W,TC=100 PPM	50139	BCK3320FT
A15A1R836	321–5012–00			RES,FXD:THICK FILM;332 OHM,1%,0.125W,TC=100 PPM	50139	BCK3320FT
A15A1R837	321–5012–00			RES,FXD:THICK FILM;332 OHM,1%,0.125W,TC=100 PPM	50139	BCK3320FT
A15A1R838	321–5012–00			RES,FXD:THICK FILM;332 OHM,1%,0.125W,TC=100 PPM	50139	BCK3320FT
A15A1R839	321–5004–00			RES,FXD:THICK FILM;22.1 OHM,1%,0.125W,TC=100 PPM	57668	MCR18FWEA22E1
A15A1R870	321–5030–00			RES,FXD:THICK FILM;10.0K OHM,1%,0.125W,TC=100 PPM	50139	BCK1002FT
A15A1R871	321–5030–00			RES,FXD:THICK FILM;10.0K OHM,1%,0.125W,TC=100 PPM	50139	BCK1002FT
A15A1R872	321–5026–00			RES,FXD:THICK FILM;4.75K OHM,1%,0.125W,TC=100 PPM	50139	BCK4751FT
A15A1R873	321–5030–00			RES,FXD:THICK FILM;10.0K OHM,1%,0.125W,TC=100 PPM	50139	BCK1002FT
A15A1R874	321–5030–00			RES,FXD:THICK FILM;10.0K OHM,1%,0.125W,TC=100 PPM	50139	BCK1002FT
A15A1R875	321–5030–00			RES,FXD:THICK FILM;10.0K OHM,1%,0.125W,TC=100 PPM	50139	BCK1002FT
A15A1R880	321–5000–00			RES,FXD:THICK FILM;10 OHM,1%,0.125W,TC=100 PPM	59124	RK73H2B10R0FT
A15A1R881	321–5000–00			RES,FXD:THICK FILM;10 OHM,1%,0.125W,TC=100 PPM	59124	RK73H2B10R0FT
A15A1R882	321–5000–00			RES,FXD:THICK FILM;10 OHM,1%,0.125W,TC=100 PPM	59124	RK73H2B10R0FT
A15A1R883	321–5000–00			RES,FXD:THICK FILM;10 OHM,1%,0.125W,TC=100 PPM	59124	RK73H2B10R0FT

Replaceable Electrical Parts List (Cont.)

Component Number	Tektronix Part Number	Serial No. Effective	Serial No. Discont'd	Name & Description	Mfr. Code	Mfr. Part Number
A15A1R884	321–5000–00			RES,FXD:THICK FILM;10 OHM,1%,0.125W,TC=100 PPM	59124	RK73H2B10R0FT
A15A1R900	311–1225–00			RES,VAR,NONWW:TRMR,1K OHM,0.5W	32997	3386F–1–102
A15A1R901	321–5013–00			RES,FXD:THICK FILM;392 OHM,1%,0.125W,TC=100 PPM	50139	BCK3920FT
A15A1R902	321–5025–00			RES,FXD:THICK FILM;3.92K OHM,1%,0.125W,TC=100 PPM	50139	BCK3921FT
A15A1R903	321–5009–00			RES,FXD:THICK FILM;182 OHM,1%,0.125W,TC=100 PPM	50139	BCK1820FT
A15A1R904	321–5009–00			RES,FXD:THICK FILM;182 OHM,1%,0.125W,TC=100 PPM	50139	BCK1820FT
A15A1R905	321–5018–00			RES,FXD:THICK FILM;1.0K OHM,1%,0.125W,TC=100 PPM	50139	BCK1001FT
A15A1R906	321–5030–00			RES,FXD:THICK FILM;10.0K OHM,1%,0.125W,TC=100 PPM	50139	BCK1002FT
A15A1R907	321–5030–00			RES,FXD:THICK FILM;10.0K OHM,1%,0.125W,TC=100 PPM	50139	BCK1002FT
A15A1R908	321–5023–00			RES,FXD:THICK FILM;2.74K OHM,1%,0.125W,TC=100 PPM	50139	BCK2741FT
A15A1R909	321–5023–00			RES,FXD:THICK FILM;2.74K OHM,1%,0.125W,TC=100 PPM	50139	BCK2741FT
A15A1R910	311–1225–00			RES,VAR,NONWW:TRMR,1K OHM,0.5W	32997	3386F–1–102
A15A1R911	321–5020–00			RES,FXD:THICK FILM;1.5K OHM,1%,0.125W,TC=100 PPM	50139	BCK1501FT
A15A1R912	321–5025–00			RES,FXD:THICK FILM;3.92K OHM,1%,0.125W,TC=100 PPM	50139	BCK3921FT
A15A1R913	321–5035–00		B034199	RES,FXD:THICK FILM;27.4K OHM,1%,0.125W,TC=100 PPM	50139	BCK2742FT
A15A1R913	321–5033–00	B044200		RES,FXD:THICK FILM,18.2K OHM,1%,0.125W,TC=100 PPM,1206,T&R	50139	BCK1822FT
A15A1R914	321–5020–00			RES,FXD:THICK FILM;1.5K OHM,1%,0.125W,TC=100 PPM	50139	BCK1501FT
A15A1R915	321–5009–00			RES,FXD:THICK FILM;182 OHM,1%,0.125W,TC=100 PPM	50139	BCK1820FT
A15A1R916	321–5020–00			RES,FXD:THICK FILM;1.5K OHM,1%,0.125W,TC=100 PPM	50139	BCK1501FT
A15A1R917	321–5017–00			RES,FXD:THICK FILM;825 OHM,1%,0.125W,TC=100 PPM	50139	BCK8250FT
A15A1R918	321–5023–00			RES,FXD:THICK FILM;2.74K OHM,1%,0.125W,TC=100 PPM	50139	BCK2741FT
A15A1R919	321–5033–00			RES,FXD:THICK FILM;18.2K OHM,1%,0.125W,TC=100 PPM	50139	BCK1822FT
A15A1R920	321–5025–00			RES,FXD:THICK FILM;3.92K OHM,1%,0.125W,TC=100 PPM	50139	BCK3921FT
A15A1R921	321–5004–00			RES,FXD:THICK FILM;22.1 OHM,1%,0.125W,TC=100 PPM	57668	MCR18FWEA22E1
A15A1R922	321–5045–00			RES,FXD:THICK FILM;68.1 OHM,1%,0.125W,TC=100 PPM	50139	BCD68R1FT
A15A1R923	321–5004–00			RES,FXD:THICK FILM;22.1 OHM,1%,0.125W,TC=100 PPM	57668	MCR18FWEA22E1
A15A1R924	321–5013–00			RES,FXD:THICK FILM;392 OHM,1%,0.125W,TC=100 PPM	50139	BCK3920FT
A15A1R925	321–5045–00			RES,FXD:THICK FILM;68.1 OHM,1%,0.125W,TC=100 PPM	50139	BCD68R1FT
A15A1R926	321–5045–00			RES,FXD:THICK FILM;68.1 OHM,1%,0.125W,TC=100 PPM	50139	BCD68R1FT
A15A1R927	321–5007–00			RES,FXD:THICK FILM;121 OHM,1%,0.125W,TC=100 PPM	50139	BCK1210FT
A15A1R933	321–5006–00			RES,FXD:THICK FILM;100 OHM,1%,0.125W,TC=100 PPM	50139	BCK1000FT
A15A1R934	321–5032–00			RES,FXD:THICK FILM;15.0K OHM,1%,0.125W,TC=100 PPM	50139	BCK1502FT
A15A1R937	311–1223–00			RES,VAR,NONWW:TRMR,250 OHM,0.5W	32997	3386F–1–251
A15A1R938	321–5012–00			RES,FXD:THICK FILM;332 OHM,1%,0.125W,TC=100 PPM	50139	BCK3320FT
A15A1R939	321–5017–00			RES,FXD:THICK FILM;825 OHM,1%,0.125W,TC=100 PPM	50139	BCK8250FT
A15A1R940	321–5006–00			RES,FXD:THICK FILM;100 OHM,1%,0.125W,TC=100 PPM	50139	BCK1000FT
A15A1R941	321–5011–00			RES,FXD:THICK FILM;274 OHM,1%,0.125W,TC=100 PPM	50139	BCK2740FT
A15A1R942	321–5006–00			RES,FXD:THICK FILM;100 OHM,1%,0.125W,TC=100 PPM	50139	BCK1000FT
A15A1R943	321–5010–00			RES,FXD:THICK FILM;221 OHM,1%,0.125W,TC=100 PPM	50139	BCK221FT
A15A1R944	321–5027–00			RES,FXD:THICK FILM;5.62K OHM,1%,0.125W,TC=100 PPM	50139	BCK5621FT

Replaceable Electrical Parts List (Cont.)

Component Number	Tektronix Part Number	Serial No. Effective	Serial No. Discont'd	Name & Description	Mfr. Code	Mfr. Part Number
A15A1R945	321–5018–00			RES,FXD:THICK FILM;1.0K OHM,1%,0.125W,TC=100 PPM	50139	BCK1001FT
A15A1R947	321–5010–00	B044200		RES,FXD:THICK FILM,221 OHM,1%,0.125W,TC=100 PPM	50139	BCK221FT
A15A1RT130	307–0863–00			RES,THERMAL:10 OHM,10%,NTC	15454	SG13–S
A15A1SW140	260–1849–00			SWITCH,PWR:DPDT;PUSH PUSH ALT ACT,PC PINS,6A 250VAC/1A 100VDC,36A AC SURGE,RIGHT ANG MNT	31918	130222 (NE18–00
A15A1T110	120–1401–00			TRANSFORMER,PWR:LINE TRIGGER;1:1,PRI L>0.6H, SEC RDC=75 25%	54937	DMI 500–2044
A15A1T160	120–1880–00			TRANSFORMER,RF:COMMON MODE,10MH,DCR 0.18 OH M,I MAX 3A AC,VERTICAL MOUNT,1.26 X 0.91 X 1.4 HIGH,UL REC, ,	TK2058	TF3233S–103Y3R0
A15A1T190	120–1776–00			TRANSFORMER,RF:ENERGY STORAGE POT CORE2710S AFETY CONTROLLED	75498	128–7050–00
A15A1T230	120–1890–00			TRANSFORMER,PWR:SWITCHING,24–28KHZ,IN 120V OUT 3KV .3MA,12KV 10UA,115V.1A,50V .1A,20V.25A,10V 3.2A,10.5 2.2A,,	75498	129–0135–00
A15A1U260	156–1627–00		B023533	IC,LINEAR:BIPOLAR,SW–REGULATOR CONTROLLER; PWM,PUSH–PULL OUTPUTS	01295	TL594CN
A15A1U260	156–4661–00	B023534		IC,LINEAR:BIPOLAR,SW–REGULATOR CONTROLLER;PWM,PUSH–PULL OUTPUTS	04713	TL594CN
A15A1U280	156–1627–00		B023533	IC,LINEAR:BIPOLAR,SW–REGULATOR CONTROLLER; PWM,PUSH–PULL OUTPUTS	01295	TL594CN
A15A1U280	156–4661–00	B023534		IC,LINEAR:BIPOLAR,SW–REGULATOR CONTROLLER;PWM,PUSH–PULL OUTPUTS	04713	TL594CN
A15A1U281	156–0885–00			IC, OPTOCOUPLER:7.5KV ISOL, VCEO 70V, I COLL 100MA, HFE 400; 6 PIN DIP	04713	CNY17–1
A15A1U630	156–5018–00			IC,LINEAR:BIPOLAR,OP–AMP;DUAL,SINGLESUPPLY	01295	LM358D
A15A1U670	156–5074–00			IC,DIGITAL:HCMOS,FLIP FLOP;DUAL D–TYPE	01295	SN74HC74D
A15A1U730	156–5032–00			IC,DIGITAL:LSTTL,GATES;QUAD 2–INPUT NOR	01295	SN74LS02D
A15A1U780	156–5123–00			IC,DIGITAL:HCTCMOS,DEMUX/DECODER;4–TO–16 DECODER	1CH66	74HCT154D
A15A1U810	156–5018–00			IC,LINEAR:BIPOLAR,OP–AMP;DUAL,SINGLESUPPLY	01295	LM358D
A15A1U830	156–5714–00			IC,LINEAR:BIPOLAR,VOLTAGE REGULATOR;POSITIVE, ADJUSTABLE,100MA,4%	27014	LM317LM
A15A1U840	156–5081–01			IC,DIGITAL:HCTCMOS,GATE;HEX INVERTER	0JR04	TC74HCT04AFN(EL
A15A1U850	156–5088–00			IC,DIGITAL:HCTCMOS,DEMUX/DECODER;3–TO–8 DECODER	01295	SN74HCT138D
A15A1U860	156–5001–00			IC,DIGITAL:LSTTL,GATES;QUAD 2–INPUT NAND	01295	SN74LS00D
A15A1U861	156–5144–00			IC,DIGITAL:HCTCMOS,FLIP FLOP;QUAD D–TYPE, CLEAR	1CH66	74HCT175D
A15A1U870	156–5121–00			IC,DIGITAL:LSTTL,MUX/ENCODER;8–TO–3 PRIORITY ENCODER	01295	SN74LS148D
A15A1U900	156–5001–00			IC,DIGITAL:LSTTL,GATES;QUAD 2–INPUT NAND	01295	SN74LS00D
A15A1U901	156–5257–00			IC,LINEAR:BIPOLAR,OP–AMP;HIGH SLEW RATE	01295	LM318D
A15A1U910	156–5257–00			IC,LINEAR:BIPOLAR,OP–AMP;HIGH SLEW RATE	01295	LM318D
A15A1U911	156–5274–01			IC,MISC:CMOS,ANALOG SWITCH;QUAD	17856	DG211DY–T1
A15A1U920	156–5299–00			IC,LINEAR:BIPOLAR,VOLTAGE REGULATOR;NEGATIVE,–5V,100MA,5%	01295	MC79L05ACD

Replaceable Electrical Parts List (Cont.)

Component Number	Tektronix Part Number	Serial No. Effective	Serial No. Discont'd	Name & Description	Mfr. Code	Mfr. Part Number
A15A1U930	156–5070–01	B033900		IC,DIGITAL:HCTCMOS,BUFFER,OCTAL,3–STATE	01295	SN74HCT244DWR
A15A1VR150	307–0456–00			RES,V SENSITIVE:MOV; 250VRMS, 330VDC,72J, 4500A, VAR 429V, CLAMP 650V,500PF	34371	V250LA20A
A15A1VR530	152–0247–00		B033899	SEMICOND DVC,DI:ZEN,SI,150V,5%,0.4W,DO–71N989B,MI	04713	SZG275K1RL
A15A1VR530	152–0470–00	B033900		DIODE,ZENER:200V,5%,0.4W,1N992B,DO–7	04713	1N992BRL
A15A1VR630	152–0247–00		B033899	SEMICOND DVC,DI:ZEN,SI,150V,5%,0.4W,DO–71N989B,MI	04713	SZG275K1RL
A15A1VR630	152–0470–00	B033900		DIODE,ZENER:200V,5%,0.4W,1N992B,DO–7	04713	1N992BRL
A15A1VR660	152–5011–00			DIODE,ZENER:,;6.2V,5%,225MW	04713	MMBZ5234BLT1
A15A1VR661	152–5011–00			DIODE,ZENER:,;6.2V,5%,225MW	04713	MMBZ5234BLT1
A15A1VR690	152–5011–00			DIODE,ZENER:,;6.2V,5%,225MW	04713	MMBZ5234BLT1
A15A1VR691	152–5011–00			DIODE,ZENER:,;6.2V,5%,225MW	04713	MMBZ5234BLT1
A15A1W1	174–2551–00			CA ASSY,SP,ELEC:RIBBON W/CRT SOCKET	80009	174255100
A15A1W2	174–0188–01			CABLE ASSY,RF:50 OHM COAX,9.0 L,RIBBONW/O TAG	TK2469	174–0188–02
A15A1W5	175–4464–00			CA ASSY,SP,ELEC:RIBBON,;IDC,20,28 AWG,2.5 L,2X10,0.1 CTR,RCPT X PCB,2ROW	TK0032	ORDER BY DESC
A15A1W13	174–0198–02			CA ASSY,SP,ELEC:10,28 AWG,5.5 L,RIBBON	TK2469	174–0198–02
A15A1W14	174–0191–01			CA ASSY,SP,ELEC:10,28 AWG,5.4 L,RIBBON	80009	174019101
A15A1W730	321–5051–00			RES,FXD:THICK FILM;0 OHM,1%,0.125W,TC=100 PPM	09969	CRCW1206
A15A1W790	321–5051–00			RES,FXD:THICK FILM;0 OHM,1%,0.125W,TC=100 PPM	09969	CRCW1206
A15A1W830	321–5051–00			RES,FXD:THICK FILM;0 OHM,1%,0.125W,TC=100 PPM	09969	CRCW1206
A15A1W831	321–5051–00			RES,FXD:THICK FILM;0 OHM,1%,0.125W,TC=100 PPM	09969	CRCW1206
A15A1W832	321–5051–00			RES,FXD:THICK FILM;0 OHM,1%,0.125W,TC=100 PPM	09969	CRCW1206
A15A1W840	321–5051–00			RES,FXD:THICK FILM;0 OHM,1%,0.125W,TC=100 PPM	09969	CRCW1206

Component No.	Tektronix Part No.	Serial/Assembly No. Effective	Dscont	Name & Description	Mfr. Code	Mfr. Part No.
A16	119-2568-04			1ST CONVERTER A:	80009	119-2568-04
A16C101	281-0825-00			CAP,FXD,CER DI:0.005UF,+100-0%,100V	33095	51-726-008
A16C102	281-0825-00			CAP,FXD,CER DI:0.005UF,+100-0%,100V	33095	51-726-008
A16C103	281-0825-00			CAP,FXD,CER DI:0.005UF,+100-0%,100V	33095	51-726-008
A16C105	290-0512-00			CAP,FXD,ELCTLT:22UF,20%,15V	05397	T368B226M015AS
A16C106	290-0536-00			CAP,FXD,ELCTLT:10UF,20%,25V TANTALUM	05397	T368B106M025AS
A16R107	313-1820-00			RES,FXD,FILM:82 OHM,5%,0.2W	57668	TR20JE 82E
A16R108	313-1470-00			RES,FXD,FILM:47 OHM,5%,0.2W	57668	TR20JE 47E
A16A1	----- -----			CIRCUIT BD ASSY:1ST CONVERTER (PART OF A16)		
A16A1C105	283-5004-00			CAP,FXD,CER DI:0.1UF,10%,25V	80009	283-5004-00
A16A1C106	283-5005-00			CAP,FXD,CER DI:4PF,+/- 0.25PF,50V	54583	C3216C0G1H040C
A16A1C108	283-5005-00			CAP,FXD,CER DI:4PF,+/- 0.25PF,50V	54583	C3216C0G1H040C
A16A1C112	283-5005-00			CAP,FXD,CER DI:4PF,+/- 0.25PF,50V	54583	C3216C0G1H040C
A16A1C113	283-5017-00			CAP,FXD,CER DI:1PF,+/-0.25PF,50V	80009	283-5017-00
A16A1C114	283-5005-00			CAP,FXD,CER DI:4PF,+/- 0.25PF,50V	54583	C3216C0G1H040C
A16A1C120	283-5004-00			CAP,FXD,CER DI:0.1UF,10%,25V	80009	283-5004-00
A16A1C202	283-5005-00			CAP,FXD,CER DI:4PF,+/- 0.25PF,50V	54583	C3216C0G1H040C
A16A1C204	283-5005-00			CAP,FXD,CER DI:4PF,+/- 0.25PF,50V	54583	C3216C0G1H040C
A16A1C214	283-5005-00			CAP,FXD,CER DI:4PF,+/- 0.25PF,50V	54583	C3216C0G1H040C
A16A1C220	283-5004-00			CAP,FXD,CER DI:0.1UF,10%,25V	80009	283-5004-00
A16A1C222	283-5005-00			CAP,FXD,CER DI:4PF,+/- 0.25PF,50V	54583	C3216C0G1H040C
A16A1C300	283-5004-00			CAP,FXD,CER DI:0.1UF,10%,25V	80009	283-5004-00
A16A1C304	283-5005-00			CAP,FXD,CER DI:4PF,+/- 0.25PF,50V	54583	C3216C0G1H040C
A16A1C312	283-5005-00			CAP,FXD,CER DI:4PF,+/- 0.25PF,50V	54583	C3216C0G1H040C
A16A1C322	283-5003-00			CAP,FXD,CER DI:0.01UF,10%,50V	80009	283-5003-00
A16A1C324	283-5003-00			CAP,FXD,CER DI:0.01UF,10%,50V	80009	283-5003-00
A16A1C326	283-5004-00			CAP,FXD,CER DI:0.1UF,10%,25V	80009	283-5004-00
A16A1C328	283-5004-00			CAP,FXD,CER DI:0.1UF,10%,25V	80009	283-5004-00
A16A1C330	283-5003-00			CAP,FXD,CER DI:0.01UF,10%,50V	80009	283-5003-00
A16A1CR130	152-1063-00			SEMICOND DVC,DI:SCHOTTKY,SI,STAR QUAD,450MV	80009	152-1063-00
A16A1J130	131-1803-02			CONN,RCPT,ELEC:	80009	131-1803-02
A16A1J300	131-4203-00			CONN,RF JACK:	80009	131-4203-00
A16A1Q204	151-0608-00			TRANSISTOR,SIG:BIPOLAR,NPN;12V,65MA,8.5GHZ, AMPLIFIER;NE64535/2SC2585,4 PIN CERAMIC X P KG	80009	151-0608-00
A16A1Q212	151-0608-00			TRANSISTOR,SIG:BIPOLAR,NPN;12V,65MA,8.5GHZ, AMPLIFIER;NE64535/2SC2585,4 PIN CERAMIC X P KG	80009	151-0608-00
A16A1Q324	151-5000-00			TRANSISTOR,SIG:BIPOLAR,PNP;40V,200MA,250MHZ ,AMPLIFIER;MMBT3906L,TO-236/SOT-23,8MM T&R	04713	MMBT3906LT1
A16A1Q326	151-5000-00			TRANSISTOR,SIG:BIPOLAR,PNP;40V,200MA,250MHZ ,AMPLIFIER;MMBT3906L,TO-236/SOT-23,8MM T&R	04713	MMBT3906LT1
A16A1Q335	151-5000-00			TRANSISTOR,SIG:BIPOLAR,PNP;40V,200MA,250MHZ ,AMPLIFIER;MMBT3906L,TO-236/SOT-23,8MM T&R	04713	MMBT3906LT1
A16A1Q338	151-5005-00			TRANSISTOR,SIG:BIPOLAR,PNP;20V,1.0A,60MHZ,A MPLIFIER;BCX69/BC869,SOT-89,12MM T/R	04713	BCX69T1
A16A1R102	321-5006-00			RES,FXD:METAL FILM;100 OHM,1%,0.125W,TC=100 PPM;1206,T&R	80009	321-5006-00
A16A1R104	321-5006-00			RES,FXD:METAL FILM;100 OHM,1%,0.125W,TC=100	80009	321-5006-00

Component No.	Tektronix Part No.	Serial/Assembly No. Effective	Dscont	Name & Description	Mfr. Code	Mfr. Part No.
A16A1R106	321-5043-00			RES,FXD:METAL FILM;47.5 OHM,1%,0.125W,TC=100 PPM;1206,T&R	80009	321-5043-00
A16A1R113	321-5044-00			RES,FXD:METAL FILM;56.2 OHM,1%,0.125W,TC=100 PPM;1206,T&R	01121	BCD56R2FT
A16A1R114	321-5043-00			RES,FXD:METAL FILM;47.5 OHM,1%,0.125W,TC=100 PPM;1206,T&R	80009	321-5043-00
A16A1R204	321-5043-00			RES,FXD:METAL FILM;47.5 OHM,1%,0.125W,TC=100 PPM;1206,T&R	80009	321-5043-00
A16A1R214	321-5043-00			RES,FXD:METAL FILM;47.5 OHM,1%,0.125W,TC=100 PPM;1206,T&R	80009	321-5043-00
A16A1R224	321-5033-00			RES,FXD:METAL FILM;18.2K OHM,1%,0.125W,TC=100 PPM;1206,T&R	80009	321-5033-00
A16A1R234	321-5026-00			RES,FXD:METAL FILM;4.75K OHM,1%,0.125W,TC=100 PPM;1206,T&R	80009	321-5026-00
A16A1R236	321-5030-00			RES,FXD:METAL FILM;10.0K OHM,1%,0.125W,TC=100 PPM;1206,T&R	80009	321-5030-00
A16A1R314	321-5006-00			RES,FXD:METAL FILM;100 OHM,1%,0.125W,TC=100 PPM;1206,T&R	80009	321-5006-00
A16A1R315	321-5006-00			RES,FXD:METAL FILM;100 OHM,1%,0.125W,TC=100 PPM;1206,T&R	80009	321-5006-00
A16A1R322	321-5009-00			RES,FXD:METAL FILM;182 OHM,1%,0.125W,TC=100 PPM;1206,T&R	80009	321-5009-00
A16A1R324	321-5040-00			RES,FXD:METAL FILM;68.1K OHM,1%,0.125W,TC=100 PPM;1206,T&R	80009	321-5040-00
A16A1R325	321-5040-00			RES,FXD:METAL FILM;68.1K OHM,1%,0.125W,TC=100 PPM;1206,T&R	80009	321-5040-00
A16A1R326	321-5009-00			RES,FXD:METAL FILM;182 OHM,1%,0.125W,TC=100 PPM;1206,T&R	80009	321-5009-00
A16A1R328	321-5033-00			RES,FXD:METAL FILM;18.2K OHM,1%,0.125W,TC=100 PPM;1206,T&R	80009	321-5033-00
A16A1R330	321-5030-00			RES,FXD:METAL FILM;10.0K OHM,1%,0.125W,TC=100 PPM;1206,T&R	80009	321-5030-00
A16A1R332	321-5028-00			RES,FXD:METAL FILM;6.81K OHM,1%,0.125W,TC=100 PPM;1206,T&R	80009	321-5028-00
A16A1R334	321-5014-00			RES,FXD:METAL FILM;475 OHM,1%,0.125W,TC=100 PPM;1206,T&R	80009	321-5014-00
A16A1R335	321-5043-00			RES,FXD:METAL FILM;47.5 OHM,1%,0.125W,TC=100 PPM;1206,T&R	80009	321-5043-00
A16A1R336	321-5043-00			RES,FXD:METAL FILM;47.5 OHM,1%,0.125W,TC=100 PPM;1206,T&R	80009	321-5043-00
A16A1R338	321-5000-00			RES,FXD:METAL FILM;10 OHM,1%,0.125W,TC=100 PPM;1206,T&R	57668	MCR18EZHFW10E
A16A1U230	156-5017-01			IC,LINEAR:BIPOLAR,OP-AMP;DUAL;MC1458D,SO8.150,12MM T/R	80009	156-5017-01
A16A2	----- -----			CIRCUIT BD ASSY: 1ST MIXER INPUT (PART OF A16)		
A16A2C151	283-5004-00			CAP,FXD,CER DI:0.1UF,10%,25V	80009	283-5004-00
A16A2C201	281-0825-00			CAP,FXD,CER DI:0.005UF,+100-0%,100V	33095	51-726-008
A16A2C202	281-0825-00			CAP,FXD,CER DI:0.005UF,+100-0%,100V	33095	51-726-008
A16A2C240	283-5004-00			CAP,FXD,CER DI:0.1UF,10%,25V	80009	283-5004-00
A16A2C241	283-5004-00			CAP,FXD,CER DI:0.1UF,10%,25V	80009	283-5004-00
A16A2C242	283-5004-00			CAP,FXD,CER DI:0.1UF,10%,25V	80009	283-5004-00
A16A2C258	283-5004-00			CAP,FXD,CER DI:0.1UF,10%,25V	80009	283-5004-00
A16A2C259	283-5004-00			CAP,FXD,CER DI:0.1UF,10%,25V	80009	283-5004-00
A16A2C344	283-5042-00			CAP,FXD,CER DI:27PF,5%,50V	80009	283-5042-00
A16A2C345	283-5004-00			CAP,FXD,CER DI:0.1UF,10%,25V	80009	283-5004-00
A16A2C346	283-5004-00			CAP,FXD,CER DI:0.1UF,10%,25V	80009	283-5004-00
A16A2C351	283-5004-00			CAP,FXD,CER DI:0.1UF,10%,25V	80009	283-5004-00
A16A2C352	290-0524-00			CAP,FXD,ELCTLT:4.7UF,20%,10V	05397	T368A475M010AZ

Component No.	Tektronix Part No.	Serial/Assembly No. Effective	Dscont	Name & Description	Mfr. Code	Mfr. Part No.
A16A2C353	283-5004-00			CAP,FXD,CER DI:0.1UF,10%,25V	80009	283-5004-00
A16A2CR255	152-5004-00			DIODE,SIG:,ULTRA FAST;70V,0.15A,6NS,SER-PAI R;BAV99,SOT-23,8MM TR	25088	BAV99T
A16A2CR256	152-5004-00			DIODE,SIG:,ULTRA FAST;70V,0.15A,6NS,SER-PAI R;BAV99,SOT-23,8MM TR	25088	BAV99T
A16A2CR257	152-5004-00			DIODE,SIG:,ULTRA FAST;70V,0.15A,6NS,SER-PAI R;BAV99,SOT-23,8MM TR	25088	BAV99T
A16A2J350	131-1803-02			CONN,RCPT,ELEC:	80009	131-1803-02
A16A2Q243	151-5000-00			TRANSISTOR,SIG:BIPOLAR,PNP;40V,200MA,250MHZ ,AMPLIFIER;MMBT3906L,TO-236/SOT-23,8MM T&R	04713	MMBT3906LT1
A16A2Q244	151-5001-00			TRANSISTOR,SIG:BIPOLAR,NPN;40V,200MA,300MHZ ,AMPLIFIER;MMBT3904L,TO-236/SOT-23,8MM T&R	80009	151-5001-00
A16A2R150	321-5000-00			RES,FXD:METAL FILM;10 OHM,1%,0.125W,TC=100 PPM;1206,T&R	57668	MCR18EZHFW10E
A16A2R245	321-5004-00			RES,FXD:METAL FILM;22.1 OHM,1%,0.125W,TC=10 0 PPM;1206,T&R	80009	321-5004-00
A16A2R246	321-5004-00			RES,FXD:METAL FILM;22.1 OHM,1%,0.125W,TC=10 0 PPM;1206,T&R	80009	321-5004-00
A16A2R247	321-5004-00			RES,FXD:METAL FILM;22.1 OHM,1%,0.125W,TC=10 0 PPM;1206,T&R	80009	321-5004-00
A16A2R250	321-5018-00			RES,FXD:METAL FILM;1.0K OHM,1%,0.125W,TC=10 0 PPM;1206,T&R	80009	321-5018-00
A16A2R251	321-5012-00			RES,FXD:METAL FILM;332 OHM,1%,0.125W,TC=100 PPM;1206,T&R	80009	321-5012-00
A16A2R252	321-5002-00			RES,FXD:METAL FILM;15 OHM,1%,0.125W,TC=100 PPM;1206,T&R	57668	MCR18EZHFW 15E0
A16A2R253	321-5014-00			RES,FXD:METAL FILM;475 OHM,1%,0.125W,TC=100 PPM;1206,T&R	80009	321-5014-00
A16A2R254	321-5022-00			RES,FXD:METAL FILM;2.21K OHM,1%,0.125W,TC=1 00 PPM;1206,T&R	80009	321-5022-00
A16A2R340	321-5034-00			RES,FXD:METAL FILM;22.1K OHM,1%,0.125W,TC=1 00 PPM;1206,T&R	80009	321-5034-00
A16A2R341	321-5032-00			RES,FXD:METAL FILM;15.0K OHM,1%,0.125W,TC=1 00 PPM;1206,T&R	80009	321-5032-00
A16A2R342	321-5030-00			RES,FXD:METAL FILM;10.0K OHM,1%,0.125W,TC=1 00 PPM;1206,T&R	80009	321-5030-00
A16A2R343	321-5032-00			RES,FXD:METAL FILM;15.0K OHM,1%,0.125W,TC=1 00 PPM;1206,T&R	80009	321-5032-00
A16A2R349	311-5031-00			RES,VAR,NONWW:10K,20%,0.2W	32997	3335W-1-103E
A16A2R355	321-5015-00			RES,FXD:METAL FILM;562 OHM,1%,0.125W,TC=100 PPM;1206,T&R	80009	321-5015-00
A16A2R356	321-5046-00			RES,FXD:METAL FILM;82.5 OHM,1%,0.125W,TC=10 0 PPM;1206,T&R	80009	321-5046-00
A16A2R357	321-5022-00			RES,FXD:METAL FILM;2.21K OHM,1%,0.125W,TC=1 00 PPM;1206,T&R	80009	321-5022-00
A16A2U348	156-5095-01			IC,LINEAR:BIPOLAR,OP-AMP;LOW NOISE,HIGH OUT PUT DRIVE;NE5534D,SO8.150,12MM T&R	80009	156-5095-01
A16A2VR347	152-5011-00			DIODE,SIG:,;6.2V,5%,225MW;MMBZ5234BL,SOT-23 ,8MM TR	80009	152-5011-00
A16A2VR354	152-5011-00			DIODE,SIG:,;6.2V,5%,225MW;MMBZ5234BL,SOT-23 ,8MM TR	80009	152-5011-00
A17	119-2301-05	B010100	B010864	YIG BUFFER ASSY:	80009	119-2301-05
A17	119-2301-06	B010865		YIG BUFFER ASSY:2712	80009	119-2301-06
A17C172	281-0825-00			CAP,FXD,CER DI:0.005UF,+100-0%,100V	33095	51-726-008
A17C192	281-0825-00			CAP,FXD,CER DI:0.005UF,+100-0%,100V	33095	51-726-008
A17C568	281-0825-00			CAP,FXD,CER DI:0.005UF,+100-0%,100V	33095	51-726-008
A17J100	131-1803-02			CONN,RCPT,ELEC:	80009	131-1803-02
A17J300	131-1803-02			CONN,RCPT,ELEC:	80009	131-1803-02
A17J380	131-1803-02			CONN,RCPT,ELEC:	80009	131-1803-02

Component No.	Tektronix Part No.	Serial/Assembly No. Effective	Dscont	Name & Description	Mfr. Code	Mfr. Part No.
A17J430	131-0938-00			CONN,RF JACK::SMB/PNL,;MALE,STR,50 OHM,0.25 HEX,2.0 L 0.025 DIA TAIL,10-32 THD,REAR MT	24931	32JR125-1
A17J460	131-0938-00			CONN,RF JACK::SMB/PNL,;MALE,STR,50 OHM,0.25 HEX,2.0 L 0.025 DIA TAIL,10-32 THD,REAR MT	24931	32JR125-1
A17P1	015-1022-00			TERMN,COAXIAL:50 OHM,0.5W,SMA	80009	015-1022-00
A17P1	015-0567-00	B010996		TERMN,COAXIAL:50 OHM 0.5W DC TO 18.0GHZ (OPTION 15 ONLY)	34078	2444MC-032
A17W27	174-0383-01			CA ASSY,SP,ELEC:6,26 AWG,10.5 L,RIBBON	80009	174-0383-01
A17A1	----- -----			CKT BD SUBASSY:YIG BUFFER AMPLIFIER (PART OF A17)		
A17A1C130	283-5002-00			CAP,FXD,CER DI:1000PF,10%,50V	80009	283-5002-00
A17A1C140	283-5002-00			CAP,FXD,CER DI:1000PF,10%,50V	80009	283-5002-00
A17A1C150	283-5002-00			CAP,FXD,CER DI:1000PF,10%,50V	80009	283-5002-00
A17A1C160	283-5018-00			CAP,FXD,CER DI:0.033UF,10%,50V	80009	283-5018-00
A17A1C180	290-5001-00	B010100	B010864	CAP,FXD,ELCTLT:10UF,20%,16V	TK0900	ALCHIP-S16V10UF
A17A1C180	290-5039-00	B010865		CAP,FXD,ALUM:10UF,20%,50V,6.3MM,SMD,16MM TAPE & REEL.	80009	290-5039-00
A17A1C182	283-5001-00			CAP,FXD,CER DI:100PF,5%,50V	80009	283-5001-00
A17A1C190	283-5003-00			CAP,FXD,CER DI:0.01UF,10%,50V	80009	283-5003-00
A17A1C194	283-5004-00			CAP,FXD,CER DI:0.1UF,10%,25V	80009	283-5004-00
A17A1C266	283-5002-00			CAP,FXD,CER DI:1000PF,10%,50V	80009	283-5002-00
A17A1C267	283-5003-00			CAP,FXD,CER DI:0.01UF,10%,50V	80009	283-5003-00
A17A1C280	283-5001-00			CAP,FXD,CER DI:100PF,5%,50V	80009	283-5001-00
A17A1C282	283-5001-00			CAP,FXD,CER DI:100PF,5%,50V	80009	283-5001-00
A17A1C290	283-5002-00			CAP,FXD,CER DI:1000PF,10%,50V	80009	283-5002-00
A17A1C292	283-5004-00			CAP,FXD,CER DI:0.1UF,10%,25V	80009	283-5004-00
A17A1C296	283-5042-00			CAP,FXD,CER DI:27PF,5%,50V	80009	283-5042-00
A17A1C298	283-5004-00			CAP,FXD,CER DI:0.1UF,10%,25V	80009	283-5004-00
A17A1C340	283-5005-00			CAP,FXD,CER DI:4PF,+/- 0.25PF,50V	54583	C3216C0G1H040C
A17A1C392	290-5001-00	B010100	B010864	CAP,FXD,ELCTLT:10UF,20%,16V	TK0900	ALCHIP-S16V10UF
A17A1C392	290-5039-00	B010865		CAP,FXD,ALUM:10UF,20%,50V,6.3MM,SMD,16MM TAPE & REEL.	80009	290-5039-00
A17A1C442	283-5000-00			CAP,FXD,CER DI:10PF,5%,50V	80009	283-5000-00
A17A1C444	283-5000-00			CAP,FXD,CER DI:10PF,5%,50V	80009	283-5000-00
A17A1C466	283-5003-00			CAP,FXD,CER DI:0.01UF,10%,50V	80009	283-5003-00
A17A1C468	283-5004-00			CAP,FXD,CER DI:0.1UF,10%,25V	80009	283-5004-00
A17A1C550	283-5004-00			CAP,FXD,CER DI:0.1UF,10%,25V	80009	283-5004-00
A17A1C560	283-5004-00			CAP,FXD,CER DI:0.1UF,10%,25V	80009	283-5004-00
A17A1CR178	152-0962-00			SEMICOND DVC,DI:SCHOTTKY,SI,CER STRIPLINE CASE	80009	152-0962-00
A17A1CR290	152-0843-00			DIODE,SIG:SCHTKY,;SER-PAIR,20V,410MV,1.3PF; HSMS-2812,SOT-23,T&R	80009	152-0843-00
A17A1HY450	155-0338-00			MICROCKT,LINEAR:O GATE	80009	155-0338-00
A17A1Q150	151-1221-00			TRANSISTOR,SIG:MESFET,N-CH;GAAS,20MS,3DB@4GHZ;NE72084	80009	151-1221-00
A17A1Q158	151-5000-00			TRANSISTOR,SIG:BIPOLAR,PNP;40V,200MA,250MHZ ,AMPLIFIER;MMBT3906L,TO-236/SOT-23,8MM T&R	04713	MMBT3906LT1
A17A1Q164	151-5000-00			TRANSISTOR,SIG:BIPOLAR,PNP;40V,200MA,250MHZ ,AMPLIFIER;MMBT3906L,TO-236/SOT-23,8MM T&R	04713	MMBT3906LT1
A17A1Q190	151-5004-00			TRANSISTOR,SIG:BIPOLAR,NPN;20V,1.0A,65MHZ,AMPLIFIER;BCX68/BC868,SOT-89,12MM T/R	04713	BCX68
A17A1Q460	151-5009-00			TRANSISTOR,SIG:BIPOLAR,NPN;25V,300MA,1.2GHZ ,AMPLIFIER;BFQ17,SOT-89,12MM T/R	80009	151-5009-00
A17A1R128	321-5016-00			RES,FXD:METAL FILM;681 OHM,1%,0.125W,TC=100 PPM;1206,T&R	01121	BCK6810FT
A17A1R130	321-5016-00			RES,FXD:METAL FILM;681 OHM,1%,0.125W,TC=100 PPM;1206,T&R	01121	BCK6810FT
A17A1R132	321-5002-00			RES,FXD:METAL FILM;15 OHM,1%,0.125W,TC=100 PPM;1206,T&R	57668	MCR18EZHFW 15E0

Component No.	Tektronix Part No.	Serial/Assembly No. Effective	Dscont	Name & Description	Mfr. Code	Mfr. Part No.
A17A1R142	321-5011-00			RES,FXD:METAL FILM;274 OHM,1%,0.125W,TC=100 PPM;1206,T&R	80009	321-5011-00
A17A1R144	321-5011-00			RES,FXD:METAL FILM;274 OHM,1%,0.125W,TC=100 PPM;1206,T&R	80009	321-5011-00
A17A1R158	321-5015-00			RES,FXD:METAL FILM;562 OHM,1%,0.125W,TC=100 PPM;1206,T&R	80009	321-5015-00
A17A1R160	321-5027-00			RES,FXD:METAL FILM;5.62K OHM,1%,0.125W,TC=100 PPM;1206,T&R	80009	321-5027-00
A17A1R161	321-5023-00			RES,FXD:METAL FILM;2.74K OHM,1%,0.125W,TC=100 PPM;1206,T&R	80009	321-5023-00
A17A1R164	321-5005-00			RES,FXD:METAL FILM;27.4 OHM,1%,0.125W,TC=100 PPM;1206,T&R	80009	321-5005-00
A17A1R166	321-5026-00			RES,FXD:METAL FILM;4.75K OHM,1%,0.125W,TC=100 PPM;1206,T&R	80009	321-5026-00
A17A1R168	321-5010-00			RES,FXD:METAL FILM;221 OHM,1%,0.125W,TC=100 PPM;1206,T&R	80009	321-5010-00
A17A1R178	321-5000-00			RES,FXD:METAL FILM;10 OHM,1%,0.125W,TC=100 PPM;1206,T&R	57668	MCR18EZHFW10E
A17A1R179	321-5006-00			RES,FXD:METAL FILM;100 OHM,1%,0.125W,TC=100 PPM;1206,T&R	80009	321-5006-00
A17A1R184	321-5013-00			RES,FXD:METAL FILM;392 OHM,1%,0.125W,TC=100 PPM;1206,T&R	80009	321-5013-00
A17A1R186	321-5048-00			RES,FXD:METAL FILM;332K OHM,1%,0.125W,TC=100 PPM;1206,T&R	80009	321-5048-00
A17A1R192	321-5000-00			RES,FXD:METAL FILM;10 OHM,1%,0.125W,TC=100 PPM;1206,T&R	57668	MCR18EZHFW10E
A17A1R194	321-5005-00			RES,FXD:METAL FILM;27.4 OHM,1%,0.125W,TC=100 PPM;1206,T&R	80009	321-5005-00
A17A1R224	321-5006-00			RES,FXD:METAL FILM;100 OHM,1%,0.125W,TC=100 PPM;1206,T&R	80009	321-5006-00
A17A1R230	321-5016-00			RES,FXD:METAL FILM;681 OHM,1%,0.125W,TC=100 PPM;1206,T&R	01121	BCK6810FT
A17A1R232	321-5016-00			RES,FXD:METAL FILM;681 OHM,1%,0.125W,TC=100 PPM;1206,T&R	01121	BCK6810FT
A17A1R264	321-5024-00			RES,FXD:METAL FILM;3.32K OHM,1%,0.125W,TC=100 PPM;1206,T&R	80009	321-5024-00
A17A1R266	321-5009-00			RES,FXD:METAL FILM;182 OHM,1%,0.125W,TC=100 PPM;1206,T&R	80009	321-5009-00
A17A1R278	321-5006-00			RES,FXD:METAL FILM;100 OHM,1%,0.125W,TC=100 PPM;1206,T&R	80009	321-5006-00
A17A1R280	321-5006-00			RES,FXD:METAL FILM;100 OHM,1%,0.125W,TC=100 PPM;1206,T&R	80009	321-5006-00
A17A1R281	321-5006-00			RES,FXD:METAL FILM;100 OHM,1%,0.125W,TC=100 PPM;1206,T&R	80009	321-5006-00
A17A1R282	321-5006-00			RES,FXD:METAL FILM;100 OHM,1%,0.125W,TC=100 PPM;1206,T&R	80009	321-5006-00
A17A1R284	321-5020-00			RES,FXD:METAL FILM;1.5K OHM,1%,0.125W,TC=100 PPM;1206,T&R	80009	321-5020-00
A17A1R286	321-5012-00			RES,FXD:METAL FILM;332 OHM,1%,0.125W,TC=100 PPM;1206,T&R	80009	321-5012-00
A17A1R288	311-2227-00			RES,VAR,NONWW:TRMR,100 OHM,20%,0.5W LINEAR	TK1450	GF06UT 100
A17A1R294	321-5048-00			RES,FXD:METAL FILM;332K OHM,1%,0.125W,TC=100 PPM;1206,T&R	80009	321-5048-00
A17A1R296	321-5048-00			RES,FXD:METAL FILM;332K OHM,1%,0.125W,TC=100 PPM;1206,T&R	80009	321-5048-00
A17A1R310	321-5006-00			RES,FXD:METAL FILM;100 OHM,1%,0.125W,TC=100 PPM;1206,T&R	80009	321-5006-00
A17A1R322	321-5011-00			RES,FXD:METAL FILM;274 OHM,1%,0.125W,TC=100 PPM;1206,T&R	80009	321-5011-00

Component No.	Tektronix Part No.	Serial/Assembly No. Effective	Dscont	Name & Description	Mfr. Code	Mfr. Part No.
A17A1R324	321-5011-00			RES,FXD:METAL FILM;274 OHM,1%,0.125W,TC=100 PPM;1206,T&R	80009	321-5011-00
A17A1R326	321-5042-00			RES,FXD:METAL FILM;39.2 OHM,1%,0.125W,TC=10 0 PPM;1206,T&R	80009	321-5042-00
A17A1R332	321-5011-00			RES,FXD:METAL FILM;274 OHM,1%,0.125W,TC=100 PPM;1206,T&R	80009	321-5011-00
A17A1R334	321-5011-00			RES,FXD:METAL FILM;274 OHM,1%,0.125W,TC=100 PPM;1206,T&R	80009	321-5011-00
A17A1R394	321-5044-00			RES,FXD:METAL FILM;56.2 OHM,1%,0.125W,TC=10 0 PPM;1206,T&R	01121	BCD56R2FT
A17A1R438	311-0607-00			RES,VAR,NONWW:TRMR,10K OHM,0.5W	80009	311-0607-00
A17A1R450	321-5045-00			RES,FXD:METAL FILM;68.1 OHM,1%,0.125W,TC=10 0 PPM;1206,T&R	80009	321-5045-00
A17A1R464	321-5000-00			RES,FXD:METAL FILM;10 OHM,1%,0.125W,TC=100 PPM;1206,T&R	57668	MCR18EZHFW10E
A17A1R466	321-5046-00			RES,FXD:METAL FILM;82.5 OHM,1%,0.125W,TC=10 0 PPM;1206,T&R	80009	321-5046-00
A17A1R540	321-5034-00			RES,FXD:METAL FILM;22.1K OHM,1%,0.125W,TC=1 00 PPM;1206,T&R	80009	321-5034-00
A17A1R542	321-5034-00			RES,FXD:METAL FILM;22.1K OHM,1%,0.125W,TC=1 00 PPM;1206,T&R	80009	321-5034-00
A17A1R550	321-5015-00			RES,FXD:METAL FILM;562 OHM,1%,0.125W,TC=100 PPM;1206,T&R	80009	321-5015-00
A17A1R552	321-5044-00			RES,FXD:METAL FILM;56.2 OHM,1%,0.125W,TC=10 0 PPM;1206,T&R	01121	BCD56R2FT
A17A1R560	321-5015-00			RES,FXD:METAL FILM;562 OHM,1%,0.125W,TC=100 PPM;1206,T&R	80009	321-5015-00
A17A1R562	321-5018-00			RES,FXD:METAL FILM;1.0K OHM,1%,0.125W,TC=10 0 PPM;1206,T&R	80009	321-5018-00
A17A1R563	321-5043-00			RES,FXD:METAL FILM;47.5 OHM,1%,0.125W,TC=10 0 PPM;1206,T&R	80009	321-5043-00
A17A1R564	321-5051-00			RES,FXD:METAL FILM;0 OHM,1%,0.125W,TC=100 P PM;1206,T&R	80009	321-5051-00
A17A1T450	120-1737-00			TRANSFORMER,RF:BALUN,5:2 RATIO,#34 WIRE,276 -0712-00 CORE	0JR03	120-1737-00
A17A1U290	156-5095-01			IC,LINEAR:BIPOLAR,OP-AMP;LOW NOISE,HIGH OUT PUT DRIVE;NE5534D,SO8.150,12MM T&R	80009	156-5095-01
A17A1VR190	152-5015-00			DIODE,ZENER:,;7.5V,5%,225MW;MMBZ5236BL,SOT-23,8MM TR	80009	152-5015-00
A17A1VR284	152-5011-00			DIODE,SIG:,;6.2V,5%,225MW;MMBZ5234BL,SOT-23 ,8MM TR	80009	152-5011-00
A18	672-1297-00	B010100	B010756	CIRCUIT BD ASSY:RF ATTN	80009	672-1297-00
A18	672-1297-01	B010757		CIRCUIT BD ASSY:RF ATTN	80009	672-1297-01
A18J210	131-4203-00			CONN,RF JACK:	80009	131-4203-00
A18A1	----- -----			(PART OF A18) DIGITAL CONTROL		
A18A1C311	290-5002-00			CAP,FXD,ELCTLT:10UF,20V	TK1424	20MC100M-TER
A18A1C330	290-5002-00			CAP,FXD,ELCTLT:10UF,20V	TK1424	20MC100M-TER
A18A1C412	290-5002-00			CAP,FXD,ELCTLT:10UF,20V	TK1424	20MC100M-TER
A18A1Q300	151-5000-00			TRANSISTOR,SIG:BIPOLAR,PNP;40V,200MA,250MHZ ,AMPLIFIER;MMBT3906L,TO-236/SOT-23,8MM T&R	04713	MMBT3906LT1
A18A1Q421	151-5000-00			TRANSISTOR,SIG:BIPOLAR,PNP;40V,200MA,250MHZ ,AMPLIFIER;MMBT3906L,TO-236/SOT-23,8MM T&R	04713	MMBT3906LT1
A18A1Q430	151-5000-00			TRANSISTOR,SIG:BIPOLAR,PNP;40V,200MA,250MHZ ,AMPLIFIER;MMBT3906L,TO-236/SOT-23,8MM T&R	04713	MMBT3906LT1
A18A1Q432	151-5000-00			TRANSISTOR,SIG:BIPOLAR,PNP;40V,200MA,250MHZ ,AMPLIFIER;MMBT3906L,TO-236/SOT-23,8MM T&R	04713	MMBT3906LT1
A18A1Q434	151-5000-00			TRANSISTOR,SIG:BIPOLAR,PNP;40V,200MA,250MHZ ,AMPLIFIER;MMBT3906L,TO-236/SOT-23,8MM T&R	04713	MMBT3906LT1

Component No.	Tektronix Part No.	Serial/Assembly No. Effective	Dscont	Name & Description	Mfr. Code	Mfr. Part No.
A18A1Q441	151-5000-00			TRANSISTOR,SIG:BIPOLAR,PNP;40V,200MA,250MHZ ,AMPLIFIER;MMBT3906L,TO-236/SOT-23,8MM T&R	04713	MMBT3906LT1
A18A1Q443	151-5000-00			TRANSISTOR,SIG:BIPOLAR,PNP;40V,200MA,250MHZ ,AMPLIFIER;MMBT3906L,TO-236/SOT-23,8MM T&R	04713	MMBT3906LT1
A18A1Q445	151-5000-00			TRANSISTOR,SIG:BIPOLAR,PNP;40V,200MA,250MHZ ,AMPLIFIER;MMBT3906L,TO-236/SOT-23,8MM T&R	04713	MMBT3906LT1
A18A1R301	321-5030-00			RES,FXD:METAL FILM;10.0K OHM,1%,0.125W,TC=1 00 PPM;1206,T&R	80009	321-5030-00
A18A1R312	321-5000-00			RES,FXD:METAL FILM;10 OHM,1%,0.125W,TC=100 PPM;1206,T&R	57668	MCR18EZHFW10E
A18A1R321	321-5000-00			RES,FXD:METAL FILM;10 OHM,1%,0.125W,TC=100 PPM;1206,T&R	57668	MCR18EZHFW10E
A18A1R400	321-5018-00			RES,FXD:METAL FILM;1.0K OHM,1%,0.125W,TC=10 0 PPM;1206,T&R	80009	321-5018-00
A18A1R401	321-5018-00			RES,FXD:METAL FILM;1.0K OHM,1%,0.125W,TC=10 0 PPM;1206,T&R	80009	321-5018-00
A18A1R410	321-5030-00			RES,FXD:METAL FILM;10.0K OHM,1%,0.125W,TC=1 00 PPM;1206,T&R	80009	321-5030-00
A18A1R411	321-5018-00			RES,FXD:METAL FILM;1.0K OHM,1%,0.125W,TC=10 0 PPM;1206,T&R	80009	321-5018-00
A18A1R413	321-5030-00			RES,FXD:METAL FILM;10.0K OHM,1%,0.125W,TC=1 00 PPM;1206,T&R	80009	321-5030-00
A18A1R420	321-5026-00			RES,FXD:METAL FILM;4.75K OHM,1%,0.125W,TC=1 00 PPM;1206,T&R	80009	321-5026-00
A18A1R422	321-5026-00			RES,FXD:METAL FILM;4.75K OHM,1%,0.125W,TC=1 00 PPM;1206,T&R	80009	321-5026-00
A18A1R431	321-5026-00			RES,FXD:METAL FILM;4.75K OHM,1%,0.125W,TC=1 00 PPM;1206,T&R	80009	321-5026-00
A18A1R433	321-5026-00			RES,FXD:METAL FILM;4.75K OHM,1%,0.125W,TC=1 00 PPM;1206,T&R	80009	321-5026-00
A18A1R440	321-5026-00			RES,FXD:METAL FILM;4.75K OHM,1%,0.125W,TC=1 00 PPM;1206,T&R	80009	321-5026-00
A18A1R442	321-5026-00			RES,FXD:METAL FILM;4.75K OHM,1%,0.125W,TC=1 00 PPM;1206,T&R	80009	321-5026-00
A18A1R444	321-5026-00			RES,FXD:METAL FILM;4.75K OHM,1%,0.125W,TC=1 00 PPM;1206,T&R	80009	321-5026-00
A18A1U414	156-5021-01			IC,DIGITAL:CMOS,REGISTER;8-STAGE SHIFT/STOR AGE, 3-STATE;4094,SO16.150,16MM T&R	80009	156-5021-01
A18A2	----- -----			(PART OF A18) RF		
A18A2C110	283-0253-00			CAP,FXD,CER DI:0.01UF,10%,100V	80009	283-0253-00
A18A2C111	283-0278-02	B010100	B010756	CAP,FXD,CER DI:2.2UF,100V,20%	51642	
A18A2C111	283-5016-00	B010757		CAP,FXD,CER DI:1UF,10%,50V	80009	283-5016-00
A18A2C112	283-5016-00	B010757		CAP,FXD,CER DI:1UF,10%,50V	80009	283-5016-00
A18A2C123	283-5004-00			CAP,FXD,CER DI:0.1UF,10%,25V	80009	283-5004-00
A18A2C138	281-0720-00			CAP,FXD,CER DI:1750PF,+80-20%,250V	33095	51-707-002
A18A2C143	283-5004-00			CAP,FXD,CER DI:0.1UF,10%,25V	80009	283-5004-00
A18A2C144	283-5004-00			CAP,FXD,CER DI:0.1UF,10%,25V	80009	283-5004-00
A18A2C145	283-5004-00			CAP,FXD,CER DI:0.1UF,10%,25V	80009	283-5004-00
A18A2C151	283-5004-00			CAP,FXD,CER DI:0.1UF,10%,25V	80009	283-5004-00
A18A2C210	283-5004-00			CAP,FXD,CER DI:0.1UF,10%,25V	80009	283-5004-00
A18A2C220	283-5004-00			CAP,FXD,CER DI:0.1UF,10%,25V	80009	283-5004-00
A18A2C222	281-0720-00			CAP,FXD,CER DI:1750PF,+80-20%,250V	33095	51-707-002
A18A2C225	283-5004-00			CAP,FXD,CER DI:0.1UF,10%,25V	80009	283-5004-00
A18A2C228	281-0720-00			CAP,FXD,CER DI:1750PF,+80-20%,250V	33095	51-707-002
A18A2C230	283-5004-00			CAP,FXD,CER DI:0.1UF,10%,25V	80009	283-5004-00
A18A2C232	281-0720-00			CAP,FXD,CER DI:1750PF,+80-20%,250V	33095	51-707-002
A18A2C233	281-0322-00			CAP,VAR,CERAMIC:TRMR,0.5PF/2.0PF,250VDC	52769	GKZ2R000
A18A2C238	281-0720-00			CAP,FXD,CER DI:1750PF,+80-20%,250V	33095	51-707-002
A18A2C239	281-0221-00			CAP,VAR,CER DI:2-10PF,100V	80009	281-0221-00

Component No.	Tektronix Part No.	Serial/Assembly No. Effective	Dscont	Name & Description	Mfr. Code	Mfr. Part No.
A18A2C240	283-5004-00			CAP,FXD,CER DI:0.1UF,10%,25V	80009	283-5004-00
A18A2C242	281-0720-00			CAP,FXD,CER DI:1750PF,+80-20%,250V	33095	51-707-002
A18A2C244	281-0720-00			CAP,FXD,CER DI:1750PF,+80-20%,250V	33095	51-707-002
A18A2C245	283-5004-00			CAP,FXD,CER DI:0.1UF,10%,25V	80009	283-5004-00
A18A2C248	281-0720-00			CAP,FXD,CER DI:1750PF,+80-20%,250V	33095	51-707-002
A18A2J100	131-4203-00			CONN,RF JACK:	80009	131-4203-00
A18A2J150	131-4203-00			CONN,RF JACK:	80009	131-4203-00
A18A2J200	131-4203-00			CONN,RF JACK:	80009	131-4203-00
A18A2J250	131-4203-00			CONN,RF JACK:	80009	131-4203-00
A18A2K110	148-0198-00			RELAY,ARMATURE:2 FORM C,COIL 6VDC, 98 OHM,C ONTACT 1A@28 VDC,PKG TO-5	11532	712-6
A18A2K120	148-0198-00			RELAY,ARMATURE:2 FORM C,COIL 6VDC, 98 OHM,C ONTACT 1A@28 VDC,PKG TO-5	11532	712-6
A18A2K125	148-0198-00			RELAY,ARMATURE:2 FORM C,COIL 6VDC, 98 OHM,C ONTACT 1A@28 VDC,PKG TO-5	11532	712-6
A18A2K130	148-0198-00			RELAY,ARMATURE:2 FORM C,COIL 6VDC, 98 OHM,C ONTACT 1A@28 VDC,PKG TO-5	11532	712-6
A18A2K135	148-0198-00			RELAY,ARMATURE:2 FORM C,COIL 6VDC, 98 OHM,C ONTACT 1A@28 VDC,PKG TO-5	11532	712-6
A18A2K140	148-0198-00			RELAY,ARMATURE:2 FORM C,COIL 6VDC, 98 OHM,C ONTACT 1A@28 VDC,PKG TO-5	11532	712-6
A18A2K145	148-0198-00			RELAY,ARMATURE:2 FORM C,COIL 6VDC, 98 OHM,C ONTACT 1A@28 VDC,PKG TO-5	11532	712-6
A18A2R100	321-5007-00			RES,FXD:METAL FILM;121 OHM,1%,0.125W,TC=100 PPM;1206,T&R	80009	321-5007-00
A18A2R101	321-5007-00			RES,FXD:METAL FILM;121 OHM,1%,0.125W,TC=100 PPM;1206,T&R	80009	321-5007-00
A18A2R102	321-5044-00			RES,FXD:METAL FILM;56.2 OHM,1%,0.125W,TC=10 0 PPM;1206,T&R	01121	BCD56R2FT
A18A2R112	321-5043-00			RES,FXD:METAL FILM;47.5 OHM,1%,0.125W,TC=10 0 PPM;1206,T&R	80009	321-5043-00
A18A2R113	321-5027-00			RES,FXD:METAL FILM;5.62K OHM,1%,0.125W,TC=1 00 PPM;1206,T&R	80009	321-5027-00
A18A2R114	321-5044-00			RES,FXD:METAL FILM;56.2 OHM,1%,0.125W,TC=10 0 PPM;1206,T&R	01121	BCD56R2FT
A18A2R115	321-5010-00			RES,FXD:METAL FILM;221 OHM,1%,0.125W,TC=100 PPM;1206,T&R	80009	321-5010-00
A18A2R120	321-5044-00			RES,FXD:METAL FILM;56.2 OHM,1%,0.125W,TC=10 0 PPM;1206,T&R	01121	BCD56R2FT
A18A2R121	321-5007-00			RES,FXD:METAL FILM;121 OHM,1%,0.125W,TC=100 PPM;1206,T&R	80009	321-5007-00
A18A2R122	321-5007-00			RES,FXD:METAL FILM;121 OHM,1%,0.125W,TC=100 PPM;1206,T&R	80009	321-5007-00
A18A2R123	321-5044-00			RES,FXD:METAL FILM;56.2 OHM,1%,0.125W,TC=10 0 PPM;1206,T&R	01121	BCD56R2FT
A18A2R130	321-5010-00			RES,FXD:METAL FILM;221 OHM,1%,0.125W,TC=100 PPM;1206,T&R	80009	321-5010-00
A18A2R131	321-5010-00			RES,FXD:METAL FILM;221 OHM,1%,0.125W,TC=100 PPM;1206,T&R	80009	321-5010-00
A18A2R132	321-5004-00			RES,FXD:METAL FILM;22.1 OHM,1%,0.125W,TC=10 0 PPM;1206,T&R	80009	321-5004-00
A18A2R133	321-5014-00			RES,FXD:METAL FILM;475 OHM,1%,0.125W,TC=100 PPM;1206,T&R	80009	321-5014-00
A18A2R134	321-5013-00			RES,FXD:METAL FILM;392 OHM,1%,0.125W,TC=100 PPM;1206,T&R	80009	321-5013-00
A18A2R135	321-5001-00			RES,FXD:METAL FILM;12.1 OHM,1%,0.125W,TC=10 0 PPM;1206,T&R	57668	MCR18EZHFW 12E1
A18A2R140	321-5045-00			RES,FXD:METAL FILM;68.1 OHM,1%,0.125W,TC=10 0 PPM;1206,T&R	80009	321-5045-00

Component No.	Tektronix Part No.	Serial/Assembly No. Effective	Dscont	Name & Description	Mfr. Code	Mfr. Part No.
A18A2R141	321-5045-00			RES,FXD:METAL FILM;68.1 OHM,1%,0.125W,TC=100 PPM;1206,T&R	80009	321-5045-00
A18A2R142	321-5008-00			RES,FXD:METAL FILM;150 OHM,1%,0.125W,TC=100 PPM;1206,T&R	80009	321-5008-00
A18A2R150	321-5000-00			RES,FXD:METAL FILM;10 OHM,1%,0.125W,TC=100 PPM;1206,T&R	57668	MCR18EZHFW10E
A18A2R250	321-5015-00			RES,FXD:METAL FILM;562 OHM,1%,0.125W,TC=100 PPM;1206,T&R	80009	321-5015-00
A18A2R251	321-5044-00			RES,FXD:METAL FILM;56.2 OHM,1%,0.125W,TC=100 PPM;1206,T&R	01121	BCD56R2FT
A18A2U155	156-2691-00			IC,LINEAR:BIPOLAR,AMPLIFIER;MICROWAVE,17DB GAIN,950MHZ;UPC1654A,TO-33	80009	156-2691-00
A19	119-2206-00			OSCILLATOR,RF:1.9 TO 4.0 GHZ	80009	119-2206-00
A19A1	----- -----			CIRCUIT BD ASSY:YIG INTERFACE (PART OF A19)		
A19A1C120	290-0326-02			CAP,FXD,ELCTLT:820UF,10%,6V	24165	109D827X9006F2
A19A1C240	290-0726-00			CAP,FXD,ELCTLT:220UF,20%,10V	80009	290-0726-00
A19A1C260	290-5001-00	B010100	B010832	CAP,FXD,ELCTLT:10UF,20%,16V	TK0900	ALCHIP-S16V10UF
A19A1C260	290-0804-00	B010833		CAP,FXD,ELCTLT:10UF,+50-20%,25V	80009	290-0804-00
A19A1C320	290-0326-02			CAP,FXD,ELCTLT:820UF,10%,6V	24165	109D827X9006F2
A19A1C430	290-0726-00			CAP,FXD,ELCTLT:220UF,20%,10V	80009	290-0726-00
A19A1CR320	152-5005-00			DIODE,SIG:,ULTRA FAST;70V,0.15A,6NS,COM-ANODE;BAW56,SOT-23,8MM TR	80009	152-5005-00
A19A1J230	131-3774-00			CONN,HDR:PCB,;MALE,STR,2 X 36,0.1 CTR,0.230 MLG X 0.095 TAIL,30 GOLD;,,	22526	65610-172
A19A1K220	148-5000-00			RELAY,REED:	80009	148-5000-00
A19A1Q120	151-5000-00			TRANSISTOR,SIG:BIPOLAR,PNP;40V,200MA,250MHZ ,AMPLIFIER;MMBT3906L,TO-236/SOT-23,8MM T&R	04713	MMBT3906LT1
A19A1Q140	151-5001-00			TRANSISTOR,SIG:BIPOLAR,NPN;40V,200MA,300MHZ ,AMPLIFIER;MMBT3904L,TO-236/SOT-23,8MM T&R	80009	151-5001-00
A19A1Q318	151-5001-00			TRANSISTOR,SIG:BIPOLAR,NPN;40V,200MA,300MHZ ,AMPLIFIER;MMBT3904L,TO-236/SOT-23,8MM T&R	80009	151-5001-00
A19A1Q320	151-5001-00			TRANSISTOR,SIG:BIPOLAR,NPN;40V,200MA,300MHZ ,AMPLIFIER;MMBT3904L,TO-236/SOT-23,8MM T&R	80009	151-5001-00
A19A1Q328	151-5000-00			TRANSISTOR,SIG:BIPOLAR,PNP;40V,200MA,250MHZ ,AMPLIFIER;MMBT3906L,TO-236/SOT-23,8MM T&R	04713	MMBT3906LT1
A19A1R118	321-0097-00			RES,FXD,FILM:100 OHM,1%,0.125W,TC=T0	91637	CMF55116G100R0F
A19A1R130	321-5045-00			RES,FXD:METAL FILM;68.1 OHM,1%,0.125W,TC=100 PPM;1206,T&R	80009	321-5045-00
A19A1R131	311-2230-00			RES,VAR,TRMR:CERMET;500 OHM,20%,0.5W,0.197 SQ,TOP ADJUST;T&R	TK1450	GF06UT 500
A19A1R136	321-0306-00			RES,FXD,FILM:15.0K OHM,1%,0.125W,TC=T0	80009	321-0306-00
A19A1R212	321-0122-00			RES,FXD,FILM:182 OHM,1%,0.125W,TC=T0	80009	321-0122-00
A19A1R214	321-0202-00			RES,FXD,FILM:1.24K OHM,1%,0.125W,TC=T0	19701	5043ED1K240F
A19A1R216	321-0139-00			RES,FXD,FILM:274 OHM,1%,0.125W,TC=T0	07716	CEAD274R0F
A19A1R218	321-5018-00			RES,FXD:METAL FILM;1.0K OHM,1%,0.125W,TC=100 PPM;1206,T&R	80009	321-5018-00
A19A1R219	321-5018-00			RES,FXD:METAL FILM;1.0K OHM,1%,0.125W,TC=100 PPM;1206;T&R	80009	321-5018-00
A19A1R230	321-0289-07			RES,FXD,FILM:10.0K OHM,0.1%,0.125W,TC=T9	80009	321-0289-07
A19A1R232	321-5022-00			RES,FXD:METAL FILM;2.21K OHM,1%,0.125W,TC=100 PPM;1206,T&R	80009	321-5022-00
A19A1R234	321-5000-00			RES,FXD:METAL FILM;10 OHM,1%,0.125W,TC=100 PPM;1206,T&R	57668	MCR18EZHFW10E
A19A1R236	321-5000-00			RES,FXD:METAL FILM;10 OHM,1%,0.125W,TC=100 PPM;1206,T&R	57668	MCR18EZHFW10E
A19A1R240	321-5022-00			RES,FXD:METAL FILM;2.21K OHM,1%,0.125W,TC=100 PPM;1206,T&R	80009	321-5022-00
A19A1R318	321-0289-07			RES,FXD,FILM:10.0K OHM,0.1%,0.125W,TC=T9	80009	321-0289-07

Component No.	Tektronix Part No.	Serial/Assembly No. Effective	Dscont	Name & Description	Mfr. Code	Mfr. Part No.
A19A1R320	321-5022-00			RES,FXD:METAL FILM;2.21K OHM,1%,0.125W,TC=100 PPM;1206,T&R	80009	321-5022-00
A19A1R322	321-5043-00			RES,FXD:METAL FILM;47.5 OHM,1%,0.125W,TC=100 PPM;1206,T&R	80009	321-5043-00
A19A1R324	321-0816-07			RES,FXD,FILM:5K OHM,0.1%,0.125W,TC=T9	80009	321-0816-07
A19A1R326	321-5022-00			RES,FXD:METAL FILM;2.21K OHM,1%,0.125W,TC=100 PPM;1206,T&R	80009	321-5022-00
A19A1R327	321-5000-00			RES,FXD:METAL FILM;10 OHM,1%,0.125W,TC=100 PPM;1206,T&R	57668	MCR18EZHFW10E
A19A1R328	321-5000-00			RES,FXD:METAL FILM;10 OHM,1%,0.125W,TC=100 PPM;1206,T&R	57668	MCR18EZHFW10E
A19A1R330	311-2230-00			RES,VAR,TRMR:CERMET;500 OHM,20%,0.5W,0.197 SQ,TOP ADJUST;T&R	TK1450	GF06UT 500
A19A1R340	311-2230-00			RES,VAR,TRMR:CERMET;500 OHM,20%,0.5W,0.197 SQ,TOP ADJUST;T&R	TK1450	GF06UT 500
A19A1R360	321-0289-07			RES,FXD,FILM:10.0K OHM,0.1%,0.125W,TC=T9	80009	321-0289-07
A19A1R362	321-0289-07			RES,FXD,FILM:10.0K OHM,0.1%,0.125W,TC=T9	80009	321-0289-07
A19A1R364	321-5006-00			RES,FXD:METAL FILM;100 OHM,1%,0.125W,TC=100 PPM;1206,T&R	80009	321-5006-00
A19A1U120	156-5082-01			IC,LINEAR:BIPOLAR,OP-AMP;LOW OFFSET;OP07CD, SO8.150,16MM T&R	80009	156-5082-01
A19A1U320	156-5082-01			IC,LINEAR:BIPOLAR,OP-AMP;LOW OFFSET;OP07CD, SO8.150,16MM T&R	80009	156-5082-01
A19A1U350	156-5297-00			IC,LINEAR:BIPOLAR,VOLTAGE REGULATOR;ADJUSTABLE,SHUNT,100MA,2%;TL431CD,SO8.150,TUBE	80009	156-5297-00
A19A1VR120	152-0304-00			DIODE,ZENER:,;20V,5%,0.4W;1N968B,DO-35 OR 7 ,TR	80009	152-0304-00
A19A1VR218	152-0304-00			DIODE,ZENER:,;20V,5%,0.4W;1N968B,DO-35 OR 7 ,TR	80009	152-0304-00
A21	670-9470-00	B010100	B010614	CIRCUIT BD ASSY:REF OSCILLATOR	80009	670-9470-00
A21	670-9470-01	B010615		CIRCUIT BD ASSY:REFERENCE OSCILLATOR	80009	670-9470-01
A21	670-9470-02		B034199			
A21	670-9470-03	B044200				
A21C112	283-5004-00			CAP,FXD,CER DI:0.1UF,10%,25V	80009	283-5004-00
A21C140	283-5001-00			CAP,FXD,CER DI:100PF,5%,50V	80009	283-5001-00
A21C141	283-5001-00			CAP,FXD,CER DI:100PF,5%,50V	80009	283-5001-00
A21C151	283-5001-00			CAP,FXD,CER DI:100PF,5%,50V	80009	283-5001-00
A21C200	283-5004-00			CAP,FXD,CER DI:0.1UF,10%,25V	80009	283-5004-00
A21C232	281-0957-00			CAP,FXD,CER DI:82PF,5%,500V	80009	281-0957-00
A21C250	283-5001-00			CAP,FXD,CER DI:100PF,5%,50V	80009	283-5001-00
A21C255	283-5004-00			CAP,FXD,CER DI:0.1UF,10%,25V	80009	283-5004-00
A21C256	283-5004-00			CAP,FXD,CER DI:0.1UF,10%,25V	80009	283-5004-00
A21C261	283-5004-00			CAP,FXD,CER DI:0.1UF,10%,25V	80009	283-5004-00
A21C272	283-5001-00			CAP,FXD,CER DI:100PF,5%,50V	80009	283-5001-00
A21C280	283-5001-00			CAP,FXD,CER DI:100PF,5%,50V	80009	283-5001-00
A21C287	283-5004-00			CAP,FXD,CER DI:0.1UF,10%,25V	80009	283-5004-00
A21C331	283-5004-00			CAP,FXD,CER DI:0.1UF,10%,25V	80009	283-5004-00
A21C353	283-5004-00			CAP,FXD,CER DI:0.1UF,10%,25V	80009	283-5004-00
A21C360	283-5001-00			CAP,FXD,CER DI:100PF,5%,50V	80009	283-5001-00
A21C363	283-5004-00			CAP,FXD,CER DI:0.1UF,10%,25V	80009	283-5004-00
A21C371	283-5004-00			CAP,FXD,CER DI:0.1UF,10%,25V	80009	283-5004-00
A21C374	283-5004-00			CAP,FXD,CER DI:0.1UF,10%,25V	80009	283-5004-00
A21C383	283-5004-00			CAP,FXD,CER DI:0.1UF,10%,25V	80009	283-5004-00
A21C431	283-5004-00			CAP,FXD,CER DI:0.1UF,10%,25V	80009	283-5004-00
A21C441	283-5004-00			CAP,FXD,CER DI:0.1UF,10%,25V	80009	283-5004-00
A21C460	283-5004-00			CAP,FXD,CER DI:0.1UF,10%,25V	80009	283-5004-00
A21C471	283-5004-00			CAP,FXD,CER DI:0.1UF,10%,25V	80009	283-5004-00
A21C480	283-5004-00			CAP,FXD,CER DI:0.1UF,10%,25V	80009	283-5004-00
A21C562	283-5004-00			CAP,FXD,CER DI:0.1UF,10%,25V	80009	283-5004-00
A21C583	290-5002-00			CAP,FXD,ELCTLT:10UF,20V	TK1424	20MC100M-TER

Component No.	Tektronix Part No.	Serial/Assembly No. Effective	Dscont	Name & Description	Mfr. Code	Mfr. Part No.
A21CR284	152-5004-00			DIODE,SIG:,ULTRA FAST;70V,0.15A,6NS,SER-PAI R;BAV99,SOT-23,8MM TR	25088	BAV99T
A21CR363	152-5004-00			DIODE,SIG:,ULTRA FAST;70V,0.15A,6NS,SER-PAI R;BAV99,SOT-23,8MM TR	25088	BAV99T
A21CR364	152-5004-00			DIODE,SIG:,ULTRA FAST;70V,0.15A,6NS,SER-PAI R;BAV99,SOT-23,8MM TR	25088	BAV99T
A21CR370	152-5004-00			DIODE,SIG:,ULTRA FAST;70V,0.15A,6NS,SER-PAI R;BAV99,SOT-23,8MM TR	25088	BAV99T
A21CR490	152-5004-00			DIODE,SIG:,ULTRA FAST;70V,0.15A,6NS,SER-PAI R;BAV99,SOT-23,8MM TR	25088	BAV99T
A21CR491	152-5004-00			DIODE,SIG:,ULTRA FAST;70V,0.15A,6NS,SER-PAI R;BAV99,SOT-23,8MM TR	25088	BAV99T
A21H310	119-2265-00			OVEN,CRYSTAL:5W,5VDC	12020	T05P-15-70
A21J110	131-0938-00			CONN,RF JACK::SMB/PNL,;MALE,STR,50 OHM,0.25 HEX,2.0 L 0.025 DIA TAIL,10-32 THD,REAR MT	24931	32JR125-1
A21J130	131-0938-00			CONN,RF JACK::SMB/PNL,;MALE,STR,50 OHM,0.25 HEX,2.0 L 0.025 DIA TAIL,10-32 THD,REAR MT	24931	32JR125-1
A21J140	131-0938-00			CONN,RF JACK::SMB/PNL,;MALE,STR,50 OHM,0.25 HEX,2.0 L 0.025 DIA TAIL,10-32 THD,REAR MT	24931	32JR125-1
A21J180	131-0938-00			CONN,RF JACK::SMB/PNL,;MALE,STR,50 OHM,0.25 HEX,2.0 L 0.025 DIA TAIL,10-32 THD,REAR MT	24931	32JR125-1
A21J290	131-2221-00			CONN,HDR:PCB;,MALE,RTANG,2 X 25,0.1 CTR,0.3 18 MLG X 0.110 TAIL,30 GOLD;,,	22526	65626-150
A21L230	108-5031-00			COIL,RF:	02113	1008CT-200-5
A21Q213	151-5011-00			TRANSISTOR,SIG:BIPOLAR,NPN;12V,50MA,900MHZ, AMPLIFIER;MMBR5179L,TO-236/SOT-23,8MM T&R	80009	151-5011-00
A21Q276	151-5011-00			TRANSISTOR,SIG:BIPOLAR,NPN;12V,50MA,900MHZ, AMPLIFIER;MMBR5179L,TO-236/SOT-23,8MM T&R	80009	151-5011-00
A21Q277	151-5011-00			TRANSISTOR,SIG:BIPOLAR,NPN;12V,50MA,900MHZ, AMPLIFIER;MMBR5179L,TO-236/SOT-23,8MM T&R	80009	151-5011-00
A21Q286	151-5000-00			TRANSISTOR,SIG:BIPOLAR,PNP;40V,200MA,250MHZ ,AMPLIFIER;MMBT3906L,TO-236/SOT-23,8MM T&R	04713	MMBT3906LT1
A21Q320	151-5011-00			TRANSISTOR,SIG:BIPOLAR,NPN;12V,50MA,900MHZ, AMPLIFIER;MMBR5179L,TO-236/SOT-23,8MM T&R	80009	151-5011-00
A21Q362	151-5000-00			TRANSISTOR,SIG:BIPOLAR,PNP;40V,200MA,250MHZ ,AMPLIFIER;MMBT3906L,TO-236/SOT-23,8MM T&R	04713	MMBT3906LT1
A21Q450	151-5001-00			TRANSISTOR,SIG:BIPOLAR,NPN;40V,200MA,300MHZ ,AMPLIFIER;MMBT3904L,TO-236/SOT-23,8MM T&R	80009	151-5001-00
A21Q451	151-5001-00			TRANSISTOR,SIG:BIPOLAR,NPN;40V,200MA,300MHZ ,AMPLIFIER;MMBT3904L,TO-236/SOT-23,8MM T&R	80009	151-5001-00
A21Q552	151-5000-00			TRANSISTOR,SIG:BIPOLAR,PNP;40V,200MA,250MHZ ,AMPLIFIER;MMBT3906L,TO-236/SOT-23,8MM T&R	04713	MMBT3906LT1
A21Q570	151-5001-00			TRANSISTOR,SIG:BIPOLAR,NPN;40V,200MA,300MHZ ,AMPLIFIER;MMBT3904L,TO-236/SOT-23,8MM T&R	80009	151-5001-00
A21Q580	151-5004-00			TRANSISTOR,SIG:BIPOLAR,NPN;20V,1.0A,65MHZ,A MPLIFIER;BCX68/BC868,SOT-89,12MM T/R	04713	BCX68
A21R111	321-5025-00			RES,FXD:METAL FILM;3.92K OHM,1%,0.125W,TC=1 00 PPM;1206,T&R	80009	321-5025-00
A21R142	321-5051-00			RES,FXD:METAL FILM;0 OHM,1%,0.125W,TC=100 P PM;1206,T&R	80009	321-5051-00
A21R170	311-1237-00			RES,VAR,NONWW:1K OHM,10%,0.50W	80009	311-1237-00
A21R210	321-5043-00			RES,FXD:METAL FILM;47.5 OHM,1%,0.125W,TC=10 0 PPM;1206,T&R	80009	321-5043-00
A21R211	321-5025-00			RES,FXD:METAL FILM;3.92K OHM,1%,0.125W,TC=1 00 PPM;1206,T&R	80009	321-5025-00
A21R212	321-5018-00			RES,FXD:METAL FILM;1.0K OHM,1%,0.125W,TC=10 0 PPM;1206,T&R	80009	321-5018-00
A21R221	321-5006-00			RES,FXD:METAL FILM;100 OHM,1%,0.125W,TC=100 PPM;1206,T&R	80009	321-5006-00

Component No.	Tektronix Part No.	Serial/Assembly No. Effective	Dscont	Name & Description	Mfr. Code	Mfr. Part No.
A21R223	321-5043-00			RES,FXD:METAL FILM;47.5 OHM,1%,0.125W,TC=100 PPM;1206,T&R	80009	321-5043-00
A21R240	321-5044-00			RES,FXD:METAL FILM;56.2 OHM,1%,0.125W,TC=100 PPM;1206,T&R	01121	BCD56R2FT
A21R241	321-5014-00			RES,FXD:METAL FILM;475 OHM,1%,0.125W,TC=100 PPM;1206,T&R	80009	321-5014-00
A21R242	321-5044-00			RES,FXD:METAL FILM;56.2 OHM,1%,0.125W,TC=100 PPM;1206,T&R	01121	BCD56R2FT
A21R243	321-5014-00			RES,FXD:METAL FILM;475 OHM,1%,0.125W,TC=100 PPM;1206,T&R	80009	321-5014-00
A21R251	321-5044-00			RES,FXD:METAL FILM;56.2 OHM,1%,0.125W,TC=100 PPM;1206,T&R	01121	BCD56R2FT
A21R252	321-5008-00			RES,FXD:METAL FILM;150 OHM,1%,0.125W,TC=100 PPM;1206,T&R	80009	321-5008-00
A21R253	321-5044-00			RES,FXD:METAL FILM;56.2 OHM,1%,0.125W,TC=100 PPM;1206,T&R	01121	BCD56R2FT
A21R254	321-5014-00			RES,FXD:METAL FILM;475 OHM,1%,0.125W,TC=100 PPM;1206,T&R	80009	321-5014-00
A21R260	321-5029-00	B010100	B010614	RES,FXD:METAL FILM;8.25K OHM,1%,0.125W,TC=100 PPM;1206,T&R	80009	321-5029-00
A21R260	321-5025-00	B010615		RES,FXD:METAL FILM;3.92K OHM,1%,0.125W,TC=100 PPM;1206,T&R	80009	321-5025-00
A21R262	321-5004-00			RES,FXD:METAL FILM;22.1 OHM,1%,0.125W,TC=100 PPM;1206,T&R	80009	321-5004-00
A21R270	321-5022-00	B010100	B010614	RES,FXD:METAL FILM;2.21K OHM,1%,0.125W,TC=100 PPM;1206,T&R	80009	321-5022-00
A21R270	321-5018-00	B010615		RES,FXD:METAL FILM;1.0K OHM,1%,0.125W,TC=100 PPM;1206,T&R	80009	321-5018-00
A21R271	321-5008-00			RES,FXD:METAL FILM;150 OHM,1%,0.125W,TC=100 PPM;1206,T&R	80009	321-5008-00
A21R273	321-5044-00			RES,FXD:METAL FILM;56.2 OHM,1%,0.125W,TC=100 PPM;1206,T&R	01121	BCD56R2FT
A21R274	321-5044-00			RES,FXD:METAL FILM;56.2 OHM,1%,0.125W,TC=100 PPM;1206,T&R	01121	BCD56R2FT
A21R275	321-5018-00			RES,FXD:METAL FILM;1.0K OHM,1%,0.125W,TC=100 PPM;1206,T&R	80009	321-5018-00
A21R278	321-5006-00			RES,FXD:METAL FILM;100 OHM,1%,0.125W,TC=100 PPM;1206,T&R	80009	321-5006-00
A21R279	321-5004-00			RES,FXD:METAL FILM;22.1 OHM,1%,0.125W,TC=100 PPM;1206,T&R	80009	321-5004-00
A21R281	321-5007-00			RES,FXD:METAL FILM;121 OHM,1%,0.125W,TC=100 PPM;1206,T&R	80009	321-5007-00
A21R282	321-5046-00	B010100	B010614	RES,FXD:METAL FILM;82.5 OHM,1%,0.125W,TC=100 PPM;1206,T&R	80009	321-5046-00
A21R282	321-5045-00	B010615		RES,FXD:METAL FILM;68.1 OHM,1%,0.125W,TC=100 PPM;1206,T&R	80009	321-5045-00
A21R283	321-5046-00	B010100	B010614	RES,FXD:METAL FILM;82.5 OHM,1%,0.125W,TC=100 PPM;1206,T&R	80009	321-5046-00
A21R283	321-5045-00	B010615		RES,FXD:METAL FILM;68.1 OHM,1%,0.125W,TC=100 PPM;1206,T&R	80009	321-5045-00
A21R285	321-5014-00			RES,FXD:METAL FILM;475 OHM,1%,0.125W,TC=100 PPM;1206,T&R	80009	321-5014-00
A21R288	321-5014-00			RES,FXD:METAL FILM;475 OHM,1%,0.125W,TC=100 PPM;1206,T&R	80009	321-5014-00
A21R321	321-5020-00			RES,FXD:METAL FILM;1.5K OHM,1%,0.125W,TC=100 PPM;1206,T&R	80009	321-5020-00
A21R330	321-5010-00			RES,FXD:METAL FILM;221 OHM,1%,0.125W,TC=100 PPM;1206,T&R	80009	321-5010-00

Component No.	Tektronix Part No.	Serial/Assembly No. Effective	Dscont	Name & Description	Mfr. Code	Mfr. Part No.
A21R332	321-5004-00			RES,FXD:METAL FILM;22.1 OHM,1%,0.125W,TC=100 PPM;1206,T&R	80009	321-5004-00
A21R350	321-5006-00			RES,FXD:METAL FILM;100 OHM,1%,0.125W,TC=100 PPM;1206,T&R	80009	321-5006-00
A21R351	321-5014-00			RES,FXD:METAL FILM;475 OHM,1%,0.125W,TC=100 PPM;1206,T&R	80009	321-5014-00
A21R352	321-5010-00			RES,FXD:METAL FILM;221 OHM,1%,0.125W,TC=100 PPM;1206,T&R	80009	321-5010-00
A21R364	321-5010-00			RES,FXD:METAL FILM;221 OHM,1%,0.125W,TC=100 PPM;1206,T&R	80009	321-5010-00
A21R365	321-5010-00			RES,FXD:METAL FILM;221 OHM,1%,0.125W,TC=100 PPM;1206,T&R	80009	321-5010-00
A21R372	321-5033-00			RES,FXD:METAL FILM;18.2K OHM,1%,0.125W,TC=100 PPM;1206,T&R	80009	321-5033-00
A21R373	321-5030-00			RES,FXD:METAL FILM;10.0K OHM,1%,0.125W,TC=100 PPM;1206,T&R	80009	321-5030-00
A21R381	321-5018-00			RES,FXD:METAL FILM;1.0K OHM,1%,0.125W,TC=100 PPM;1206,T&R	80009	321-5018-00
A21R382	321-5018-00			RES,FXD:METAL FILM;1.0K OHM,1%,0.125W,TC=100 PPM;1206,T&R	80009	321-5018-00
A21R420	307-5016-00			RES NTWK,FXD,FI:10K OHM,2%,0.125W	91637	SOMC-1601-103G
A21R452	321-5030-00			RES,FXD:METAL FILM;10.0K OHM,1%,0.125W,TC=100 PPM;1206,T&R	80009	321-5030-00
A21R453	321-5030-00			RES,FXD:METAL FILM;10.0K OHM,1%,0.125W,TC=100 PPM;1206,T&R	80009	321-5030-00
A21R461	321-5000-00			RES,FXD:METAL FILM;10 OHM,1%,0.125W,TC=100 PPM;1206,T&R	57668	MCR18EZHFW10E
A21R472	321-5018-00			RES,FXD:METAL FILM;1.0K OHM,1%,0.125W,TC=100 PPM;1206,T&R	80009	321-5018-00
A21R473	321-5030-00			RES,FXD:METAL FILM;10.0K OHM,1%,0.125W,TC=100 PPM;1206,T&R	80009	321-5030-00
A21R481	321-5042-00			RES,FXD:METAL FILM;39.2 OHM,1%,0.125W,TC=100 PPM;1206,T&R	80009	321-5042-00
A21R482	321-5042-00			RES,FXD:METAL FILM;39.2 OHM,1%,0.125W,TC=100 PPM;1206,T&R	80009	321-5042-00
A21R530	321-5018-00			RES,FXD:METAL FILM;1.0K OHM,1%,0.125W,TC=100 PPM;1206,T&R	80009	321-5018-00
A21R540	321-5047-00			RES,FXD:METAL FILM;100K OHM,1%,0.125W,TC=100 PPM;1206,T&R	80009	321-5047-00
A21R541	321-5018-00			RES,FXD:METAL FILM;1.0K OHM,1%,0.125W,TC=100 PPM;1206,T&R	80009	321-5018-00
A21R542	321-5018-00			RES,FXD:METAL FILM;1.0K OHM,1%,0.125W,TC=100 PPM;1206,T&R	80009	321-5018-00
A21R543	321-5047-00			RES,FXD:METAL FILM;100K OHM,1%,0.125W,TC=100 PPM;1206,T&R	80009	321-5047-00
A21R544	321-5047-00			RES,FXD:METAL FILM;100K OHM,1%,0.125W,TC=100 PPM;1206,T&R	80009	321-5047-00
A21R545	321-5018-00			RES,FXD:METAL FILM;1.0K OHM,1%,0.125W,TC=100 PPM;1206,T&R	80009	321-5018-00
A21R550	321-5030-00			RES,FXD:METAL FILM;10.0K OHM,1%,0.125W,TC=100 PPM;1206,T&R	80009	321-5030-00
A21R551	321-5018-00			RES,FXD:METAL FILM;1.0K OHM,1%,0.125W,TC=100 PPM;1206,T&R	80009	321-5018-00
A21R561	321-5028-00			RES,FXD:METAL FILM;6.81K OHM,1%,0.125W,TC=100 PPM;1206,T&R	80009	321-5028-00
A21R563	321-5000-00			RES,FXD:METAL FILM;10 OHM,1%,0.125W,TC=100 PPM;1206,T&R	57668	MCR18EZHFW10E
A21R564	321-5034-00			RES,FXD:METAL FILM;22.1K OHM,1%,0.125W,TC=100 PPM;1206,T&R	80009	321-5034-00

Component No.	Tektronix Part No.	Serial/Assembly No. Effective	Dscont	Name & Description	Mfr. Code	Mfr. Part No.
A21R565	321-5030-00			RES,FXD:METAL FILM;10.0K OHM,1%,0.125W,TC=100 PPM;1206,T&R	80009	321-5030-00
A21R566	321-5034-00			RES,FXD:METAL FILM;22.1K OHM,1%,0.125W,TC=100 PPM;1206,T&R	80009	321-5034-00
A21R571	321-5035-00			RES,FXD:METAL FILM;27.4K OHM,1%,0.125W,TC=100 PPM;1206,T&R	80009	321-5035-00
A21R572	321-5030-00			RES,FXD:METAL FILM;10.0K OHM,1%,0.125W,TC=100 PPM;1206,T&R	80009	321-5030-00
A21R573	321-5000-00			RES,FXD:METAL FILM;10 OHM,1%,0.125W,TC=100 PPM;1206,T&R	57668	MCR18EZHFW10E
A21R574	321-5000-00			RES,FXD:METAL FILM;10 OHM,1%,0.125W,TC=100 PPM;1206,T&R	57668	MCR18EZHFW10E
A21R581	321-5000-00			RES,FXD:METAL FILM;10 OHM,1%,0.125W,TC=100 PPM;1206,T&R	57668	MCR18EZHFW10E
A21R582	321-5000-00			RES,FXD:METAL FILM;10 OHM,1%,0.125W,TC=100 PPM;1206,T&R	57668	MCR18EZHFW10E
A21SW410	260-1721-00			SWITCH,ROCKER:8,SPST,125MA,30VDC	81073	76SB08S
A21U340	156-5279-00			IC,DIGITAL:ECL,GATE;QUAD 2-INPUT AND;10104, SO16.150,TUBE	80009	156-5279-00
A21U380	156-5018-00			IC,LINEAR:BIPOLAR,OP-AMP;DUAL,SINGLE SUPPLY ;LM358D,SO8.150,TUBE	80009	156-5018-00
A21U430	156-5080-00			IC,DIGITAL:CMOS,REGISTER;8-STAGE STATIC SHIFT REGISTER;4021B,SO16.150,TUBE	80009	156-5080-00
A21U440	156-5021-01			IC,DIGITAL:CMOS,REGISTER;8-STAGE SHIFT/STORAGE, 3-STATE;4094,SO16.150,16MM T&R	80009	156-5021-01
A21U470	156-5298-00			IC,LINEAR:BIPOLAR,VOLTAGE REGULATOR;POSITIVE,5V,100MA,5%;MC78L05ACD,SO8.150,TUBE	80009	156-5298-00
A21U560	156-5018-00			IC,LINEAR:BIPOLAR,OP-AMP;DUAL,SINGLE SUPPLY ;LM358D,SO8.150,TUBE	80009	156-5018-00
A21Y310	158-0340-00			XTAL UNIT,QTZ:100.000MHZ,0.0005%	80009	158-0340-00
A22	671-0975-00	B010100	B023247	CIRCUIT BD ASSY:300HZ	80009	671-0975-00
A22	671-0975-01	B023248		CIRCUIT BD ASSY:300HZ	80009	671-0975-01
A22C131	283-5027-00			CAP,FXD,CER DI:470PF,5%,50V	54583	
A22C220	281-0267-00			CAP,VAR,CERAMIC:6-50PF,50V	80009	281-0267-00
A22C221	283-5009-00			CAP,FXD,CER DI:15PF,5%,50V	54583	C3216C0G1H150J
A22C222	283-5009-00			CAP,FXD,CER DI:15PF,5%,50V	54583	C3216C0G1H150J
A22C230	283-5001-00			CAP,FXD,CER DI:100PF,5%,50V	80009	283-5001-00
A22C231	283-5049-00			CAP,FXD,CER DI:180PF,5%,50V	95275	VJ1206A181JXA
A22C232	283-5027-00			CAP,FXD,CER DI:470PF,5%,50V	54583	
A22C320	281-0267-00			CAP,VAR,CERAMIC:6-50PF,50V	80009	281-0267-00
A22C321	283-5001-00			CAP,FXD,CER DI:100PF,5%,50V	80009	283-5001-00
A22C322	283-5027-00			CAP,FXD,CER DI:470PF,5%,50V	54583	
A22C412	283-5004-00			CAP,FXD,CER DI:0.1UF,10%,25V	80009	283-5004-00
A22C430	283-5004-00			CAP,FXD,CER DI:0.1UF,10%,25V	80009	283-5004-00
A22C431	283-5004-00			CAP,FXD,CER DI:0.1UF,10%,25V	80009	283-5004-00
A22C524	283-5027-00			CAP,FXD,CER DI:470PF,5%,50V	54583	
A22C526	283-5004-00			CAP,FXD,CER DI:0.1UF,10%,25V	80009	283-5004-00
A22C543	283-5004-00			CAP,FXD,CER DI:0.1UF,10%,25V	80009	283-5004-00
A22C620	281-0267-00			CAP,VAR,CERAMIC:6-50PF,50V	80009	281-0267-00
A22C630	283-5001-00			CAP,FXD,CER DI:100PF,5%,50V	80009	283-5001-00
A22C720	281-0267-00			CAP,VAR,CERAMIC:6-50PF,50V	80009	281-0267-00
A22C721	283-5001-00			CAP,FXD,CER DI:100PF,5%,50V	80009	283-5001-00
A22C722	283-5009-00			CAP,FXD,CER DI:15PF,5%,50V	54583	C3216C0G1H150J
A22C723	283-5009-00			CAP,FXD,CER DI:15PF,5%,50V	54583	C3216C0G1H150J
A22C730	283-5049-00			CAP,FXD,CER DI:180PF,5%,50V	95275	VJ1206A181JXA
A22C731	283-5027-00			CAP,FXD,CER DI:470PF,5%,50V	54583	
A22C820	283-5027-00			CAP,FXD,CER DI:470PF,5%,50V'	54583	
A22C940	290-0944-00			CAP,FXD,ELCTLT:220UF,+50-20%,10V	55680	UVX1C221MPA
A22J132	131-0391-01			CONN,RF JACK:	80009	131-0391-01
A22J810	131-0391-01			CONN,RF JACK:	80009	131-0391-01

Component No.	Tektronix Part No.	Serial/Assembly No. Effective	Dscont	Name & Description	Mfr. Code	Mfr. Part No.
A22P910	131-3556-00			CONN,RCPT,ELEC:CARD CONN,2 X 12,HORIZ	22526	66527-012
A22Q421	151-5009-00			TRANSISTOR,SIG:BIPOLAR,NPN;25V,300MA,1.2GHZ ,AMPLIFIER;BFQ17,SOT-89,12MM T/R	80009	151-5009-00
A22Q443	151-5000-00			TRANSISTOR,SIG:BIPOLAR,PNP;40V,200MA,250MHZ ,AMPLIFIER;MMBT3906L,TO-236/SOT-23,8MM T&R	04713	MMBT3906LT1
A22Q443	151-5001-00			TRANSISTOR,SIG:BIPOLAR,NPN;40V,200MA,300MHZ ,AMPLIFIER;MMBT3904L,TO-236/SOT-23,8MM T&R	80009	151-5001-00
A22Q540	151-5000-00			TRANSISTOR,SIG:BIPOLAR,PNP;40V,200MA,250MHZ ,AMPLIFIER;MMBT3906L,TO-236/SOT-23,8MM T&R	04713	MMBT3906LT1
A22R324	321-5010-00	B010100	B023247	RES,FXD:METAL FILM;221 OHM,1%,0.125W	80009	321-5010-00
A22R324	321-5008-00	B023248		RES,FXD:THICK FILM,150 OHM,1%,0.125W	80009	321-5008-00
A22R325	321-5004-00	B010100	B023247	RES,FXD:METAL FILM;22.1 OHM,1%,0.125W	80009	321-5004-00
A22R325	321-5042-00	B023248		RES,FXD:THICK FILM,39.2 OHM,1%,0.125W	80009	321-5042-00
A22R330	321-5010-00	B010100	B023247	RES,FXD:METAL FILM;221 OHM,1%,0.125W	80009	321-5010-00
A22R330	321-5008-00	B023248		RES,FXD:THICK FILM,150 OHM,1%,0.125W	80009	321-5008-00
A22R411	321-5018-00			RES,FXD:METAL FILM;1.0K OHM,1%,0.125W,TC=10 0 PPM;1206,T&R	80009	321-5018-00
A22R422	321-5014-00			RES,FXD:METAL FILM;475 OHM,1%,0.125W,TC=100 PPM;1206,T&R	80009	321-5014-00
A22R441	321-5030-00			RES,FXD:METAL FILM;10.0K OHM,1%,0.125W,TC=1 00 PPM;1206,T&R	80009	321-5030-00
A22R442	321-5030-00			RES,FXD:METAL FILM;10.0K OHM,1%,0.125W,TC=1 00 PPM;1206,T&R	80009	321-5030-00
A22R520	321-5004-00			RES,FXD:METAL FILM;22.1 OHM,1%,0.125W,TC=10 0 PPM;1206,T&R	80009	321-5004-00
A22R521	321-5004-00			RES,FXD:METAL FILM;22.1 OHM,1%,0.125W,TC=10 0 PPM;1206,T&R	80009	321-5004-00
A22R522	321-5010-00			RES,FXD:METAL FILM;221 OHM,1%,0.125W,TC=100 PPM;1206,T&R	80009	321-5010-00
A22R523	321-5010-00			RES,FXD:METAL FILM;221 OHM,1%,0.125W,TC=100 PPM;1206,T&R	80009	321-5010-00
A22R541	321-5047-00			RES,FXD:METAL FILM;100K OHM,1%,0.125W,TC=10 0 PPM;1206,T&R	80009	321-5047-00
A22R542	321-5000-00			RES,FXD:METAL FILM;10 OHM,1%,0.125W,TC=100 PPM;1206,T&R	57668	MCR18EZHFW10E
A22R640	321-5030-00			RES,FXD:METAL FILM;10.0K OHM,1%,0.125W,TC=1 00 PPM;1206,T&R	80009	321-5030-00
A22R740	321-5047-00			RES,FXD:METAL FILM;100K OHM,1%,0.125W,TC=10 0 PPM;1206,T&R	80009	321-5047-00
A22R840	321-5030-00			RES,FXD:METAL FILM;10.0K OHM,1%,0.125W,TC=1 00 PPM;1206,T&R	80009	321-5030-00
A22R841	321-5030-00			RES,FXD:METAL FILM;10.0K OHM,1%,0.125W,TC=1 00 PPM;1206,T&R	80009	321-5030-00
A22R842	321-5047-00			RES,FXD:METAL FILM;100K OHM,1%,0.125W,TC=10 0 PPM;1206,T&R	80009	321-5047-00
A22R843	321-5030-00			RES,FXD:METAL FILM;10.0K OHM,1%,0.125W,TC=1 00 PPM;1206,T&R	80009	321-5030-00
A22R930	321-5000-00			RES,FXD:METAL FILM;10 OHM,1%,0.125W,TC=100 PPM;1206,T&R	57668	MCR18EZHFW10E
A22T420	120-1720-00			TRANSFORMER,RF:BALUN,1:11 RATIO,TAPPED AT 4 TURNS,W/HOLDER,CORE 276-0712-00	0JR03	120-1720-00
A22U461	156-5021-01			IC,DIGITAL:CMOS,REGISTER;8-STAGE SHIFT/STOR AGE, 3-STATE;4094,SO16.150,16MM T&R	80009	156-5021-01
A22Y210	158-0356-00	B010100	B023247	XTAL UNIT,QTZ:10.000MHZ,+/-0.001 %,PARALLEL	80009	158-0356-00
A22Y210	158-0477-00	B023248		XTAL UNIT,QTZ:10.000MHZ,+/-15PPM,SERIES	80009	158-0477-00
A22Y310	158-0356-00	B010100	B023247	XTAL UNIT,QTZ:10.000MHZ,+/-0.001 %,PARALLEL	80009	158-0356-00
A22Y310	158-0477-00	B023248		XTAL UNIT,QTZ:10.000MHZ,+/-15PPM,SERIES	80009	158-0477-00
A22Y610	158-0356-00	B010100	B023247	XTAL UNIT,QTZ:10.000MHZ,+/-0.001 %,PARALLEL	80009	158-0356-00
A22Y610	158-0477-00	B023248		XTAL UNIT,QTZ:10.000MHZ,+/-15PPM,SERIES	80009	158-0477-00

Component No.	Tektronix Part No.	Serial/Assembly No. Effective	Dscont	Name & Description	Mfr. Code	Mfr. Part No.
A22Y710	158-0356-00	B010100	B023247	XTAL UNIT,QTZ:10.000MHZ,+/-0.001 %,PARALLEL	80009	158-0356-00
A22Y710	158-0477-00	B023248		XTAL UNIT,QTZ:10.000MHZ,+/-15PPM,SERIES	80009	158-0477-00
A23	671-1740-00	B010101	B010172	CIRCUIT BD ASSY:RF OPTION	80009	671-1740-00
A23	671-1740-01	B010173	B010695	CIRCUIT BD ASSY:RF OPTION	80009	671-1740-01
A23	671-1740-02	B010696	B011389	CIRCUIT BD ASSY:RF OPTION	80009	671-1740-02
A23	671-1740-03	B011390	B023247	CIRCUIT BD ASSY:RF OPTION	80009	671-1740-03
A23	671-1740-04	B023248	B034199	CIRCUIT BD ASSY:RF OPTION 14	80009	671-1740-04
A23	671-1740-05	B044200		CIRCUIT BD ASSY:RF OPTION 14	80009	671-1740-05
A23C100	283-5004-00			CAP,FXD,CER DI:0.1UF,10%,25V	80009	283-5004-00
A23C111	283-5004-00			CAP,FXD,CER DI:0.1UF,10%,25V	80009	283-5004-00
A23C120	281-0267-00			CAP,VAR,CERAMIC:6-50PF,50V	80009	281-0267-00
A23C142	283-5004-00			CAP,FXD,CER DI:0.1UF,10%,25V	80009	283-5004-00
A23C150	283-5004-00			CAP,FXD,CER DI:0.1UF,10%,25V	80009	283-5004-00
A23C180	283-5004-00			CAP,FXD,CER DI:0.1UF,10%,25V	80009	283-5004-00
A23C191	283-5004-00			CAP,FXD,CER DI:0.1UF,10%,25V	80009	283-5004-00
A23C205	283-5004-00			CAP,FXD,CER DI:0.1UF,10%,25V	80009	283-5004-00
A23C206	283-5004-00			CAP,FXD,CER DI:0.1UF,10%,25V	80009	283-5004-00
A23C207	283-5004-00			CAP,FXD,CER DI:0.1UF,10%,25V	80009	283-5004-00
A23C208	283-5011-00			CAP,FXD,CER DI:33PF,5%,50V	95275	VJ1206A330JXA
A23C209	283-5000-00			CAP,FXD,CER DI:10PF,5%,50V	80009	283-5000-00
A23C210	281-0267-00			CAP,VAR,CERAMIC:6-50PF,50V	80009	281-0267-00
A23C211	283-5004-00			CAP,FXD,CER DI:0.1UF,10%,25V	80009	283-5004-00
A23C220	283-5004-00			CAP,FXD,CER DI:0.1UF,10%,25V	80009	283-5004-00
A23C221	283-5004-00			CAP,FXD,CER DI:0.1UF,10%,25V	80009	283-5004-00
A23C222	283-5008-00			CAP,FXD,CER DI:12PF,5%,50V	54583	C3216C0G1H120J
A23C223	283-5022-00			CAP,FXD,CER DI:47PF,5%,50V	54583	
A23C230	283-5000-00			CAP,FXD,CER DI:10PF,5%,50V	80009	283-5000-00
A23C231	283-5001-00			CAP,FXD,CER DI:100PF,5%,50V	80009	283-5001-00
A23C232	283-5000-00			CAP,FXD,CER DI:10PF,5%,50V	80009	283-5000-00
A23C233	281-0267-00			CAP,VAR,CERAMIC:6-50PF,50V	80009	281-0267-00
A23C234	281-0267-00			CAP,VAR,CERAMIC:6-50PF,50V	80009	281-0267-00
A23C240	283-5022-00			CAP,FXD,CER DI:47PF,5%,50V	54583	
A23C241	283-5008-00			CAP,FXD,CER DI:12PF,5%,50V	54583	C3216C0G1H120J
A23C242	283-5004-00			CAP,FXD,CER DI:0.1UF,10%,25V	80009	283-5004-00
A23C243	283-5004-00			CAP,FXD,CER DI:0.1UF,10%,25V	80009	283-5004-00
A23C244	283-5004-00			CAP,FXD,CER DI:0.1UF,10%,25V	80009	283-5004-00
A23C248	283-5004-00			CAP,FXD,CER DI:0.1UF,10%,25V	80009	283-5004-00
A23C249	283-5004-00			CAP,FXD,CER DI:0.1UF,10%,25V	80009	283-5004-00
A23C250	283-5008-00			CAP,FXD,CER DI:12PF,5%,50V	54583	C3216C0G1H120J
A23C251	283-5022-00			CAP,FXD,CER DI:47PF,5%,50V	54583	
A23C252	281-0267-00			CAP,VAR,CERAMIC:6-50PF,50V	80009	281-0267-00
A23C260	281-0267-00			CAP,VAR,CERAMIC:6-50PF,50V	80009	281-0267-00
A23C261	283-5003-00			CAP,FXD,CER DI:0.01UF,10%,50V	80009	283-5003-00
A23C262	283-5002-00			CAP,FXD,CER DI:1000PF,10%,50V	80009	283-5002-00
A23C263	283-5002-00			CAP,FXD,CER DI:1000PF,10%,50V	80009	283-5002-00
A23C270	281-0267-00			CAP,VAR,CERAMIC:6-50PF,50V	80009	281-0267-00
A23C271	283-5022-00			CAP,FXD,CER DI:47PF,5%,50V	54583	
A23C272	283-5008-00			CAP,FXD,CER DI:12PF,5%,50V	54583	C3216C0G1H120J
A23C273	283-5004-00			CAP,FXD,CER DI:0.1UF,10%,25V	80009	283-5004-00
A23C274	283-5004-00			CAP,FXD,CER DI:0.1UF,10%,25V	80009	283-5004-00
A23C283	283-5004-00			CAP,FXD,CER DI:0.1UF,10%,25V	80009	283-5004-00
A23C290	290-0944-00			CAP,FXD,ELCTLT:220UF,+50-20%,10V	55680	UVX1C221MPA
A23C292	283-5004-00			CAP,FXD,CER DI:0.1UF,10%,25V	80009	283-5004-00
A23C305	283-5004-00			CAP,FXD,CER DI:0.1UF,10%,25V	80009	283-5004-00
A23C306	283-5004-00			CAP,FXD,CER DI:0.1UF,10%,25V	80009	283-5004-00
A23C307	283-5004-00			CAP,FXD,CER DI:0.1UF,10%,25V	80009	283-5004-00
A23C312	283-5011-00			CAP,FXD,CER DI:33PF,5%,50V	95275	VJ1206A330JXA
A23C320	283-5000-00			CAP,FXD,CER DI:10PF,5%,50V	80009	283-5000-00
A23C321	283-5000-00			CAP,FXD,CER DI:10PF,5%,50V	80009	283-5000-00
A23C322	283-5011-00			CAP,FXD,CER DI:33PF,5%,50V	95275	VJ1206A330JXA

Component No.	Tektronix Part No.	Serial/Assembly No. Effective	Dscont	Name & Description	Mfr. Code	Mfr. Part No.
A23C323	283-5004-00			CAP,FXD,CER DI:0.1UF,10%,25V	80009	283-5004-00
A23C324	283-5004-00			CAP,FXD,CER DI:0.1UF,10%,25V	80009	283-5004-00
A23C325	281-0267-00			CAP,VAR,CERAMIC:6-50PF,50V	80009	281-0267-00
A23C326	283-5004-00			CAP,FXD,CER DI:0.1UF,10%,25V	80009	283-5004-00
A23C333	283-5011-00			CAP,FXD,CER DI:33PF,5%,50V	95275	VJ1206A330JXA
A23C334	283-5000-00			CAP,FXD,CER DI:10PF,5%,50V	80009	283-5000-00
A23C335	283-5004-00			CAP,FXD,CER DI:0.1UF,10%,25V	80009	283-5004-00
A23C343	283-5004-00			CAP,FXD,CER DI:0.1UF,10%,25V	80009	283-5004-00
A23C344	283-5004-00			CAP,FXD,CER DI:0.1UF,10%,25V	80009	283-5004-00
A23C350	283-5011-00			CAP,FXD,CER DI:33PF,5%,50V	95275	VJ1206A330JXA
A23C352	283-5011-00			CAP,FXD,CER DI:33PF,5%,50V	95275	VJ1206A330JXA
A23C353	283-5000-00			CAP,FXD,CER DI:10PF,5%,50V	80009	283-5000-00
A23C361	281-0267-00			CAP,VAR,CERAMIC:6-50PF,50V	80009	281-0267-00
A23C362	283-5000-00			CAP,FXD,CER DI:10PF,5%,50V	80009	283-5000-00
A23C363	283-5011-00			CAP,FXD,CER DI:33PF,5%,50V	95275	VJ1206A330JXA
A23C371	283-5004-00			CAP,FXD,CER DI:0.1UF,10%,25V	80009	283-5004-00
A23C372	283-5042-00			CAP,FXD,CER DI:27PF,5%,50V	80009	283-5042-00
A23C374	283-5004-00			CAP,FXD,CER DI:0.1UF,10%,25V	80009	283-5004-00
A23C375	283-5004-00			CAP,FXD,CER DI:0.1UF,10%,25V	80009	283-5004-00
A23C384	283-5004-00			CAP,FXD,CER DI:0.1UF,10%,25V	80009	283-5004-00
A23C385	283-5004-00			CAP,FXD,CER DI:0.1UF,10%,25V	80009	283-5004-00
A23C395	283-5004-00			CAP,FXD,CER DI:0.1UF,10%,25V	80009	283-5004-00
A23C406	283-5004-00			CAP,FXD,CER DI:0.1UF,10%,25V	80009	283-5004-00
A23C407	283-5004-00			CAP,FXD,CER DI:0.1UF,10%,25V	80009	283-5004-00
A23C408	283-5004-00			CAP,FXD,CER DI:0.1UF,10%,25V	80009	283-5004-00
A23C412	283-5027-00			CAP,FXD,CER DI:470PF,5%,50V	54583	
A23C413	281-0267-00			CAP,VAR,CERAMIC:6-50PF,50V	80009	281-0267-00
A23C414	283-5001-00			CAP,FXD,CER DI:100PF,5%,50V	80009	283-5001-00
A23C415	283-5009-00			CAP,FXD,CER DI:15PF,5%,50V	54583	C3216C0G1H150J
A23C416	281-0267-00			CAP,VAR,CERAMIC:6-50PF,50V	80009	281-0267-00
A23C420	283-5004-00			CAP,FXD,CER DI:0.1UF,10%,25V	80009	283-5004-00
A23C421	283-5049-00			CAP,FXD,CER DI:180PF,5%,50V	95275	VJ1206A181JXA
A23C422	283-5027-00			CAP,FXD,CER DI:470PF,5%,50V	54583	
A23C423	283-5001-00			CAP,FXD,CER DI:100PF,5%,50V	80009	283-5001-00
A23C424	283-5009-00			CAP,FXD,CER DI:15PF,5%,50V	54583	C3216C0G1H150J
A23C425	281-0267-00			CAP,VAR,CERAMIC:6-50PF,50V	80009	281-0267-00
A23C431	283-5027-00			CAP,FXD,CER DI:470PF,5%,50V	54583	
A23C432	283-5004-00			CAP,FXD,CER DI:0.1UF,10%,25V	80009	283-5004-00
A23C433	283-5004-00			CAP,FXD,CER DI:0.1UF,10%,25V	80009	283-5004-00
A23C434	283-5004-00			CAP,FXD,CER DI:0.1UF,10%,25V	80009	283-5004-00
A23C435	283-5004-00			CAP,FXD,CER DI:0.1UF,10%,25V	80009	283-5004-00
A23C436	283-5004-00			CAP,FXD,CER DI:0.1UF,10%,25V	80009	283-5004-00
A23C438	283-5004-00			CAP,FXD,CER DI:0.1UF,10%,25V	80009	283-5004-00
A23C441	283-5004-00			CAP,FXD,CER DI:0.1UF,10%,25V	80009	283-5004-00
A23C445	283-5027-00			CAP,FXD,CER DI:470PF,5%,50V	54583	
A23C450	281-0267-00			CAP,VAR,CERAMIC:6-50PF,50V	80009	281-0267-00
A23C451	281-0267-00			CAP,VAR,CERAMIC:6-50PF,50V	80009	281-0267-00
A23C452	283-5001-00			CAP,FXD,CER DI:100PF,5%,50V	80009	283-5001-00
A23C453	283-5009-00			CAP,FXD,CER DI:15PF,5%,50V	54583	C3216C0G1H150J
A23C454	283-5049-00			CAP,FXD,CER DI:180PF,5%,50V	95275	VJ1206A181JXA
A23C455	283-5027-00			CAP,FXD,CER DI:470PF,5%,50V	54583	
A23C456	283-5001-00			CAP,FXD,CER DI:100PF,5%,50V	80009	283-5001-00
A23C457	283-5009-00			CAP,FXD,CER DI:15PF,5%,50V	54583	C3216C0G1H150J
A23C463	283-5027-00			CAP,FXD,CER DI:470PF,5%,50V	54583	
A23C464	283-5004-00			CAP,FXD,CER DI:0.1UF,10%,25V	80009	283-5004-00
A23C465	283-5004-00			CAP,FXD,CER DI:0.1UF,10%,25V	80009	283-5004-00
A23C466	283-5004-00			CAP,FXD,CER DI:0.1UF,10%,25V	80009	283-5004-00
A23C472	283-5004-00			CAP,FXD,CER DI:0.1UF,10%,25V	80009	283-5004-00
A23C473	283-5004-00			CAP,FXD,CER DI:0.1UF,10%,25V	80009	283-5004-00

Component No.	Tektronix Part No.	Serial/Assembly No. Effective	Dscont	Name & Description	Mfr. Code	Mfr. Part No.
A23C491	283-5004-00			CAP,FXD,CER DI:0.1UF,10%,25V	80009	283-5004-00
A23C503	283-5004-00			CAP,FXD,CER DI:0.1UF,10%,25V	80009	283-5004-00
A23C504	283-5004-00			CAP,FXD,CER DI:0.1UF,10%,25V	80009	283-5004-00
A23C505	283-5004-00			CAP,FXD,CER DI:0.1UF,10%,25V	80009	283-5004-00
A23C506	283-5011-00			CAP,FXD,CER DI:33PF,5%,50V	95275	VJ1206A330JXA
A23C507	283-5011-00			CAP,FXD,CER DI:33PF,5%,50V	95275	VJ1206A330JXA
A23C510	283-5011-00			CAP,FXD,CER DI:33PF,5%,50V	95275	VJ1206A330JXA
A23C511	283-5002-00			CAP,FXD,CER DI:1000PF,10%,50V	80009	283-5002-00
A23C512	283-5014-00			CAP,FXD,CER DI:330PF,5%,50V	80009	283-5014-00
A23C520	283-5014-00			CAP,FXD,CER DI:330PF,5%,50V	80009	283-5014-00
A23C521	283-5022-00			CAP,FXD,CER DI:47PF,5%,50V	54583	
A23C522	281-0267-00			CAP,VAR,CERAMIC:6-50PF,50V	80009	281-0267-00
A23C530	283-5006-00			CAP,FXD,CER DI:5PF,+/- 0.25PF,50V	54583	C3216C0G1H050C
A23C531	283-5022-00			CAP,FXD,CER DI:47PF,5%,50V	54583	
A23C532	283-5004-00			CAP,FXD,CER DI:0.1UF,10%,25V	80009	283-5004-00
A23C533	283-5004-00			CAP,FXD,CER DI:0.1UF,10%,25V	80009	283-5004-00
A23C537	283-5004-00			CAP,FXD,CER DI:0.1UF,10%,25V	80009	283-5004-00
A23C540	283-5004-00			CAP,FXD,CER DI:0.1UF,10%,25V	80009	283-5004-00
A23C541	283-5006-00			CAP,FXD,CER DI:5PF,+/- 0.25PF,50V	54583	C3216C0G1H050C
A23C542	283-5022-00			CAP,FXD,CER DI:47PF,5%,50V	54583	
A23C543	283-5022-00			CAP,FXD,CER DI:47PF,5%,50V	54583	
A23C544	281-0267-00			CAP,VAR,CERAMIC:6-50PF,50V	80009	281-0267-00
A23C551	283-5002-00			CAP,FXD,CER DI:1000PF,10%,50V	80009	283-5002-00
A23C552	283-5014-00			CAP,FXD,CER DI:330PF,5%,50V	80009	283-5014-00
A23C553	283-5014-00			CAP,FXD,CER DI:330PF,5%,50V	80009	283-5014-00
A23C561	281-0267-00			CAP,VAR,CERAMIC:6-50PF,50V	80009	281-0267-00
A23C562	283-5011-00			CAP,FXD,CER DI:33PF,5%,50V	95275	VJ1206A330JXA
A23C563	283-5011-00			CAP,FXD,CER DI:33PF,5%,50V	95275	VJ1206A330JXA
A23C564	283-5011-00			CAP,FXD,CER DI:33PF,5%,50V	95275	VJ1206A330JXA
A23C565	283-5004-00			CAP,FXD,CER DI:0.1UF,10%,25V	80009	283-5004-00
A23C570	283-5004-00			CAP,FXD,CER DI:0.1UF,10%,25V	80009	283-5004-00
A23C571	283-5004-00			CAP,FXD,CER DI:0.1UF,10%,25V	80009	283-5004-00
A23J110	131-0951-00			CONN,RF JACK::	98291	051-051-0159-220
A23J180	131-0951-00		B034199	CONN,RF JACK::	98291	051-051-0159-220
A23J180	131-6278-00	B044200				
A23L110	108-5027-00			COIL,RF:	80009	108-5027-00
A23L215	108-1326-00			COIL,RF:FXD, TOROID, 2.1UH, +/-10%, DCR 0.0 65 OHM, Q=150@10MHZ,PKG DIA 0.5 X 0.2	0JR03	108-1326-00
A23L236	108-1326-00			COIL,RF:FXD, TOROID, 2.1UH, +/-10%, DCR 0.0 65 OHM, Q=150@10MHZ,PKG DIA 0.5 X 0.2	0JR03	108-1326-00
A23L354	108-1326-00			COIL,RF:FXD, TOROID, 2.1UH, +/-10%, DCR 0.0 65 OHM, Q=150@10MHZ,PKG DIA 0.5 X 0.2	0JR03	108-1326-00
A23L370	108-1326-00			COIL,RF:FXD, TOROID, 2.1UH, +/-10%, DCR 0.0 65 OHM, Q=150@10MHZ,PKG DIA 0.5 X 0.2	0JR03	108-1326-00
A23L386	108-5027-00			COIL,RF:	80009	108-5027-00
A23L513	108-1326-00			COIL,RF:FXD, TOROID, 2.1UH, +/-10%, DCR 0.0 65 OHM, Q=150@10MHZ,PKG DIA 0.5 X 0.2	0JR03	108-1326-00
A23L523	108-1326-00			COIL,RF:FXD, TOROID, 2.1UH, +/-10%, DCR 0.0 65 OHM, Q=150@10MHZ,PKG DIA 0.5 X 0.2	0JR03	108-1326-00
A23L550	108-1326-00			COIL,RF:FXD, TOROID, 2.1UH, +/-10%, DCR 0.0 65 OHM, Q=150@10MHZ,PKG DIA 0.5 X 0.2	0JR03	108-1326-00
A23L560	108-1326-00			COIL,RF:FXD, TOROID, 2.1UH, +/-10%, DCR 0.0 65 OHM, Q=150@10MHZ,PKG DIA 0.5 X 0.2	0JR03	108-1326-00
A23L630	108-1402-00			COIL,RF:FXD,2.4UH,5%,TOROID	TK1345	108-1402-00
A23L640	108-1402-00			COIL,RF:FXD,2.4UH,5%,TOROID	TK1345	108-1402-00
A23L650	108-1402-00			COIL,RF:FXD,2.4UH,5%,TOROID	TK1345	108-1402-00
A23L660	108-1402-00			COIL,RF:FXD,2.4UH,5%,TOROID	TK1345	108-1402-00
A23L790	108-1262-00			COIL,RF:FXD,100UH,10%,Q=30,SRF 8.2MHZ,DCR 0 .23 OHM,I MAX 0.75ARADIAL LEAD	80009	108-1262-00

Component No.	Tektronix Part No.	Serial/Assembly No. Effective	Dscont	Name & Description	Mfr. Code	Mfr. Part No.
A23P790	131-2920-00			CONN,HDR:PCB,;MALE,RTANG,2 X 5,0.1 CTR,0.318 MLG X 0.110 TAIL,0.238 H,30 GOLD;,,	80009	131-2920-00
A23Q112	151-5005-00			TRANSISTOR,SIG:BIPOLAR,PNP;20V,1.0A,60MHZ,AMPLIFIER;BCX69/BC869,SOT-89,12MM T/R	04713	BCX69T1
A23Q113	151-5004-00			TRANSISTOR,SIG:BIPOLAR,NPN;20V,1.0A,65MHZ,AMPLIFIER;BCX68/BC868,SOT-89,12MM T/R	04713	BCX68
A23Q143	151-5009-00			TRANSISTOR,SIG:BIPOLAR,NPN;25V,300MA,1.2GHZ,AMPLIFIER;BFQ17,SOT-89,12MM T/R	80009	151-5009-00
A23Q200	151-5005-00			TRANSISTOR,SIG:BIPOLAR,PNP;20V,1.0A,60MHZ,AMPLIFIER;BCX69/BC869,SOT-89,12MM T/R	04713	BCX69T1
A23Q201	151-5004-00			TRANSISTOR,SIG:BIPOLAR,NPN;20V,1.0A,65MHZ,AMPLIFIER;BCX68/BC868,SOT-89,12MM T/R	04713	BCX68
A23Q245	151-5009-00			TRANSISTOR,SIG:BIPOLAR,NPN;25V,300MA,1.2GHZ,AMPLIFIER;BFQ17,SOT-89,12MM T/R	80009	151-5009-00
A23Q249	151-5009-00			TRANSISTOR,SIG:BIPOLAR,NPN;25V,300MA,1.2GHZ,AMPLIFIER;BFQ17,SOT-89,12MM T/R	80009	151-5009-00
A23Q276	151-5004-00			TRANSISTOR,SIG:BIPOLAR,NPN;20V,1.0A,65MHZ,AMPLIFIER;BCX68/BC868,SOT-89,12MM T/R	04713	BCX68
A23Q280	151-5005-00			TRANSISTOR,SIG:BIPOLAR,PNP;20V,1.0A,60MHZ,AMPLIFIER;BCX69/BC869,SOT-89,12MM T/R	04713	BCX69T1
A23Q300	151-5005-00			TRANSISTOR,SIG:BIPOLAR,PNP;20V,1.0A,60MHZ,AMPLIFIER;BCX69/BC869,SOT-89,12MM T/R	04713	BCX69T1
A23Q301	151-5004-00			TRANSISTOR,SIG:BIPOLAR,NPN;20V,1.0A,65MHZ,AMPLIFIER;BCX68/BC868,SOT-89,12MM T/R	04713	BCX68
A23Q320	151-5009-00			TRANSISTOR,SIG:BIPOLAR,NPN;25V,300MA,1.2GHZ,AMPLIFIER;BFQ17,SOT-89,12MM T/R	80009	151-5009-00
A23Q339	151-5009-00			TRANSISTOR,SIG:BIPOLAR,NPN;25V,300MA,1.2GHZ,AMPLIFIER;BFQ17,SOT-89,12MM T/R	80009	151-5009-00
A23Q377	151-5004-00			TRANSISTOR,SIG:BIPOLAR,NPN;20V,1.0A,65MHZ,AMPLIFIER;BCX68/BC868,SOT-89,12MM T/R	04713	BCX68
A23Q378	151-5004-00			TRANSISTOR,SIG:BIPOLAR,NPN;20V,1.0A,65MHZ,AMPLIFIER;BCX68/BC868,SOT-89,12MM T/R	04713	BCX68
A23Q379	151-5005-00			TRANSISTOR,SIG:BIPOLAR,PNP;20V,1.0A,60MHZ,AMPLIFIER;BCX69/BC869,SOT-89,12MM T/R	04713	BCX69T1
A23Q380	151-5005-00			TRANSISTOR,SIG:BIPOLAR,PNP;20V,1.0A,60MHZ,AMPLIFIER;BCX69/BC869,SOT-89,12MM T/R	04713	BCX69T1
A23Q396	151-5001-00			TRANSISTOR,SIG:BIPOLAR,NPN;40V,200MA,300MHZ,AMPLIFIER;MMBT3904L,TO-236/SOT-23,8MM T&R	80009	151-5001-00
A23Q400	151-5005-00			TRANSISTOR,SIG:BIPOLAR,PNP;20V,1.0A,60MHZ,AMPLIFIER;BCX69/BC869,SOT-89,12MM T/R	04713	BCX69T1
A23Q401	151-5004-00			TRANSISTOR,SIG:BIPOLAR,NPN;20V,1.0A,65MHZ,AMPLIFIER;BCX68/BC868,SOT-89,12MM T/R	04713	BCX68
A23Q405	151-5005-00			TRANSISTOR,SIG:BIPOLAR,PNP;20V,1.0A,60MHZ,AMPLIFIER;BCX69/BC869,SOT-89,12MM T/R	04713	BCX69T1
A23Q406	151-5004-00			TRANSISTOR,SIG:BIPOLAR,NPN;20V,1.0A,65MHZ,AMPLIFIER;BCX68/BC868,SOT-89,12MM T/R	04713	BCX68
A23Q430	151-5009-00			TRANSISTOR,SIG:BIPOLAR,NPN;25V,300MA,1.2GHZ,AMPLIFIER;BFQ17,SOT-89,12MM T/R	80009	151-5009-00
A23Q460	151-5004-00			TRANSISTOR,SIG:BIPOLAR,NPN;20V,1.0A,65MHZ,AMPLIFIER;BCX68/BC868,SOT-89,12MM T/R	04713	BCX68
A23Q461	151-5005-00			TRANSISTOR,SIG:BIPOLAR,PNP;20V,1.0A,60MHZ,AMPLIFIER;BCX69/BC869,SOT-89,12MM T/R	04713	BCX69T1
A23Q470	151-5004-00			TRANSISTOR,SIG:BIPOLAR,NPN;20V,1.0A,65MHZ,AMPLIFIER;BCX68/BC868,SOT-89,12MM T/R	04713	BCX68
A23Q471	151-5005-00			TRANSISTOR,SIG:BIPOLAR,PNP;20V,1.0A,60MHZ,AMPLIFIER;BCX69/BC869,SOT-89,12MM T/R	04713	BCX69T1
A23Q539	151-5009-00			TRANSISTOR,SIG:BIPOLAR,NPN;25V,300MA,1.2GHZ,AMPLIFIER;BFQ17,SOT-89,12MM T/R	80009	151-5009-00

Component No.	Tektronix Part No.	Serial/Assembly No. Effective	Dscont	Name & Description	Mfr. Code	Mfr. Part No.
A23R101	321-5018-00			RES,FXD:METAL FILM;1.0K OHM,1%,0.125W,TC=100 PPM;1206,T&R	80009	321-5018-00
A23R140	321-5014-00			RES,FXD:METAL FILM;475 OHM,1%,0.125W,TC=100 PPM;1206,T&R	80009	321-5014-00
A23R141	321-5000-00			RES,FXD:METAL FILM;10 OHM,1%,0.125W,TC=100 PPM;1206,T&R	57668	MCR18EZHFW10E
A23R151	321-5013-00			RES,FXD:METAL FILM;392 OHM,1%,0.125W,TC=100 PPM;1206,T&R	80009	321-5013-00
A23R152	321-5001-00			RES,FXD:METAL FILM;12.1 OHM,1%,0.125W,TC=100 PPM;1206,T&R	57668	MCR18EZHFW 12E1
A23R153	321-5013-00			RES,FXD:METAL FILM;392 OHM,1%,0.125W,TC=100 PPM;1206,T&R	80009	321-5013-00
A23R202	321-5018-00			RES,FXD:METAL FILM;1.0K OHM,1%,0.125W,TC=100 PPM;1206,T&R	80009	321-5018-00
A23R203	321-5018-00			RES,FXD:METAL FILM;1.0K OHM,1%,0.125W,TC=100 PPM;1206,T&R	80009	321-5018-00
A23R204	321-5018-00			RES,FXD:METAL FILM;1.0K OHM,1%,0.125W,TC=100 PPM;1206,T&R	80009	321-5018-00
A23R212	321-5018-00			RES,FXD:METAL FILM;1.0K OHM,1%,0.125W,TC=100 PPM;1206,T&R	80009	321-5018-00
A23R213	321-5018-00			RES,FXD:METAL FILM;1.0K OHM,1%,0.125W,TC=100 PPM;1206,T&R	80009	321-5018-00
A23R214	321-5018-00			RES,FXD:METAL FILM;1.0K OHM,1%,0.125W,TC=100 PPM;1206,T&R	80009	321-5018-00
A23R235	321-5012-00			RES,FXD:METAL FILM;332 OHM,1%,0.125W,TC=100 PPM;1206,T&R	80009	321-5012-00
A23R240	321-5011-00			RES,FXD:METAL FILM;274 OHM,1%,0.125W,TC=100 PPM;1206,T&R	80009	321-5011-00
A23R241	321-5014-00			RES,FXD:METAL FILM;475 OHM,1%,0.125W,TC=100 PPM;1206,T&R	80009	321-5014-00
A23R242	321-5003-00			RES,FXD:METAL FILM;18.2 OHM,1%,0.125W,TC=100 PPM;1206,T&R	57668	MCR18EZHFW 18E2
A23R243	321-5050-00			RES,FXD:METAL FILM;33.2 OHM,1%,0.125W,TC=100 PPM;1206,T&R	57668	MCR18FWEA33E2
A23R244	321-5013-00			RES,FXD:METAL FILM;392 OHM,1%,0.125W,TC=100 PPM;1206,T&R	80009	321-5013-00
A23R245	321-5001-00			RES,FXD:METAL FILM;12.1 OHM,1%,0.125W,TC=100 PPM;1206,T&R	57668	MCR18EZHFW 12E1
A23R246	321-5012-00			RES,FXD:METAL FILM;332 OHM,1%,0.125W,TC=100 PPM;1206,T&R	80009	321-5012-00
A23R247	321-5014-00			RES,FXD:METAL FILM;475 OHM,1%,0.125W,TC=100 PPM;1206,T&R	80009	321-5014-00
A23R248	321-5050-00			RES,FXD:METAL FILM;33.2 OHM,1%,0.125W,TC=100 PPM;1206,T&R	57668	MCR18FWEA33E2
A23R249	321-5050-00			RES,FXD:METAL FILM;33.2 OHM,1%,0.125W,TC=100 PPM;1206,T&R	57668	MCR18FWEA33E2
A23R253	321-5013-00			RES,FXD:METAL FILM;392 OHM,1%,0.125W,TC=100 PPM;1206,T&R	80009	321-5013-00
A23R255	321-5011-00			RES,FXD:METAL FILM;274 OHM,1%,0.125W,TC=100 PPM;1206,T&R	80009	321-5011-00
A23R275	321-5018-00			RES,FXD:METAL FILM;1.0K OHM,1%,0.125W,TC=100 PPM;1206,T&R	80009	321-5018-00
A23R281	321-5018-00			RES,FXD:METAL FILM;1.0K OHM,1%,0.125W,TC=100 PPM;1206,T&R	80009	321-5018-00
A23R282	321-5018-00			RES,FXD:METAL FILM;1.0K OHM,1%,0.125W,TC=100 PPM;1206,T&R	80009	321-5018-00
A23R290	321-5018-00			RES,FXD:METAL FILM;1.0K OHM,1%,0.125W,TC=100 PPM;1206,T&R	80009	321-5018-00

Component No.	Tektronix Part No.	Serial/Assembly No. Effective	Dscont	Name & Description	Mfr. Code	Mfr. Part No.
A23R291	321-5047-00			RES,FXD:METAL FILM;100K OHM,1%,0.125W,TC=100 PPM;1206,T&R	80009	321-5047-00
A23R302	321-5018-00			RES,FXD:METAL FILM;1.0K OHM,1%,0.125W,TC=100 PPM;1206,T&R	80009	321-5018-00
A23R303	321-5018-00			RES,FXD:METAL FILM;1.0K OHM,1%,0.125W,TC=100 PPM;1206,T&R	80009	321-5018-00
A23R304	321-5018-00			RES,FXD:METAL FILM;1.0K OHM,1%,0.125W,TC=100 PPM;1206,T&R	80009	321-5018-00
A23R313	321-5019-00	B010100	B011389	RES,FXD:METAL FILM;1.21K OHM,1%,0.125W,TC=100 PPM;1206,T&R	80009	321-5019-00
A23R313	321-5017-00	B011390		RES,FXD:METAL FILM;825 OHM,1%,0.125W,TC=100 PPM;1206,T&R	80009	321-5017-00
A23R314	321-5019-00	B010100	B011389	RES,FXD:METAL FILM;1.21K OHM,1%,0.125W,TC=100 PPM;1206,T&R	80009	321-5019-00
A23R314	321-5017-00	B011390		RES,FXD:METAL FILM;825 OHM,1%,0.125W,TC=100 PPM;1206,T&R	80009	321-5017-00
A23R315	321-5045-00			RES,FXD:METAL FILM;68.1 OHM,1%,0.125W,TC=100 PPM;1206,T&R	80009	321-5045-00
A23R325	321-5000-00			RES,FXD:METAL FILM;10 OHM,1%,0.125W,TC=100 PPM;1206,T&R	57668	MCR18EZHFW10E
A23R326	321-5050-00			RES,FXD:METAL FILM;33.2 OHM,1%,0.125W,TC=100 PPM;1206,T&R	57668	MCR18FWEA33E2
A23R327	321-5014-00			RES,FXD:METAL FILM;475 OHM,1%,0.125W,TC=100 PPM;1206,T&R	80009	321-5014-00
A23R328	321-5019-00	B010100	B011389	RES,FXD:METAL FILM;1.21K OHM,1%,0.125W,TC=100 PPM;1206,T&R	80009	321-5019-00
A23R328	321-5017-00	B011390		RES,FXD:METAL FILM;825 OHM,1%,0.125W,TC=100 PPM;1206,T&R	80009	321-5017-00
A23R329	321-5045-00	B010100	B011389	RES,FXD:METAL FILM;68.1 OHM,1%,0.125W,TC=100 PPM;1206,T&R	80009	321-5045-00
A23R329	321-5017-00	B011390		RES,FXD:METAL FILM;825 OHM,1%,0.125W,TC=100 PPM;1206,T&R	80009	321-5017-00
A23R330	321-5019-00	B010100	B011389	RES,FXD:METAL FILM;1.21K OHM,1%,0.125W,TC=100 PPM;1206,T&R	80009	321-5019-00
A23R330	321-5017-00	B011390		RES,FXD:METAL FILM;825 OHM,1%,0.125W,TC=100 PPM;1206,T&R	80009	321-5017-00
A23R331	321-5002-00			RES,FXD:METAL FILM;15 OHM,1%,0.125W,TC=100 PPM;1206,T&R	57668	MCR18EZHFW 15E0
A23R332	321-5012-00			RES,FXD:METAL FILM;332 OHM,1%,0.125W,TC=100 PPM;1206,T&R	80009	321-5012-00
A23R338	321-5050-00			RES,FXD:METAL FILM;33.2 OHM,1%,0.125W,TC=100 PPM;1206,T&R	57668	MCR18FWEA33E2
A23R339	321-5014-00			RES,FXD:METAL FILM;475 OHM,1%,0.125W,TC=100 PPM;1206,T&R	80009	321-5014-00
A23R340	321-5000-00			RES,FXD:METAL FILM;10 OHM,1%,0.125W,TC=100 PPM;1206,T&R	57668	MCR18EZHFW10E
A23R341	321-5002-00			RES,FXD:METAL FILM;15 OHM,1%,0.125W,TC=100 PPM;1206,T&R	57668	MCR18EZHFW 15E0
A23R342	321-5012-00			RES,FXD:METAL FILM;332 OHM,1%,0.125W,TC=100 PPM;1206,T&R	80009	321-5012-00
A23R376	321-5018-00			RES,FXD:METAL FILM;1.0K OHM,1%,0.125W,TC=100 PPM;1206,T&R	80009	321-5018-00
A23R381	321-5018-00			RES,FXD:METAL FILM;1.0K OHM,1%,0.125W,TC=100 PPM;1206,T&R	80009	321-5018-00
A23R382	321-5018-00			RES,FXD:METAL FILM;1.0K OHM,1%,0.125W,TC=100 PPM;1206,T&R	80009	321-5018-00
A23R383	321-5018-00			RES,FXD:METAL FILM;1.0K OHM,1%,0.125W,TC=100 PPM;1206,T&R	80009	321-5018-00

Component No.	Tektronix Part No.	Serial/Assembly No. Effective	Dscont	Name & Description	Mfr. Code	Mfr. Part No.
A23R390	321-5018-00			RES,FXD:METAL FILM;1.0K OHM,1%,0.125W,TC=100 PPM;1206,T&R	80009	321-5018-00
A23R391	321-5030-00			RES,FXD:METAL FILM;10.0K OHM,1%,0.125W,TC=100 PPM;1206,T&R	80009	321-5030-00
A23R392	321-5030-00			RES,FXD:METAL FILM;10.0K OHM,1%,0.125W,TC=100 PPM;1206,T&R	80009	321-5030-00
A23R393	321-5030-00			RES,FXD:METAL FILM;10.0K OHM,1%,0.125W,TC=100 PPM;1206,T&R	80009	321-5030-00
A23R394	321-5030-00			RES,FXD:METAL FILM;10.0K OHM,1%,0.125W,TC=100 PPM;1206,T&R	80009	321-5030-00
A23R397	321-5047-00			RES,FXD:METAL FILM;100K OHM,1%,0.125W,TC=100 PPM;1206,T&R	80009	321-5047-00
A23R398	321-5047-00			RES,FXD:METAL FILM;100K OHM,1%,0.125W,TC=100 PPM;1206,T&R	80009	321-5047-00
A23R399	321-5018-00			RES,FXD:METAL FILM;1.0K OHM,1%,0.125W,TC=100 PPM;1206,T&R	80009	321-5018-00
A23R402	321-5018-00			RES,FXD:METAL FILM;1.0K OHM,1%,0.125W,TC=100 PPM;1206,T&R	80009	321-5018-00
A23R403	321-5018-00			RES,FXD:METAL FILM;1.0K OHM,1%,0.125W,TC=100 PPM;1206,T&R	80009	321-5018-00
A23R404	321-5018-00			RES,FXD:METAL FILM;1.0K OHM,1%,0.125W,TC=100 PPM;1206,T&R	80009	321-5018-00
A23R430	321-5010-00	B010100	B023247	RES,FXD:METAL FILM;221 OHM,1%,0.125W	80009	321-5010-00
A23R430	321-5008-00	B023248		RES,FXD:THICK FILM,150 OHM,1%,0.125W	80009	321-5008-00
A23R431	321-5010-00	B010100	B023247	RES,FXD:METAL FILM;221 OHM,1%,0.125W	80009	321-5010-00
A23R431	321-5008-00	B023248		RES,FXD:THICK FILM,150 OHM,1%,0.125W	80009	321-5008-00
A23R432	321-5004-00	B010100	B023247	RES,FXD:METAL FILM;22.1 OHM,1%,0.125W	80009	321-5004-00
A23R432	321-5042-00	B023248		RES,FXD:THICK FILM,39.2 OHM,1%,0.125W	80009	321-5042-00
A23R433	321-5000-00			RES,FXD:METAL FILM;10 OHM,1%,0.125W,TC=100 PPM;1206,T&R	57668	MCR18EZHFW10E
A23R434	321-5010-00			RES,FXD:METAL FILM;221 OHM,1%,0.125W,TC=100 PPM;1206,T&R	80009	321-5010-00
A23R435	321-5004-00			RES,FXD:METAL FILM;22.1 OHM,1%,0.125W,TC=100 PPM;1206,T&R	80009	321-5004-00
A23R436	321-5010-00			RES,FXD:METAL FILM;221 OHM,1%,0.125W,TC=100 PPM;1206,T&R	80009	321-5010-00
A23R437	321-5000-00			RES,FXD:METAL FILM;10 OHM,1%,0.125W,TC=100 PPM;1206,T&R	57668	MCR18EZHFW10E
A23R438	321-5050-00			RES,FXD:METAL FILM;33.2 OHM,1%,0.125W,TC=100 PPM;1206,T&R	57668	MCR18FWEA33E2
A23R439	321-5014-00			RES,FXD:METAL FILM;475 OHM,1%,0.125W,TC=100 PPM;1206,T&R	80009	321-5014-00
A23R440	321-5006-00			RES,FXD:METAL FILM;100 OHM,1%,0.125W,TC=100 PPM;1206,T&R	80009	321-5006-00
A23R442	321-5044-00			RES,FXD:METAL FILM;56.2 OHM,1%,0.125W,TC=100 PPM;1206,T&R	01121	BCD56R2FT
A23R443	321-5006-00			RES,FXD:METAL FILM;100 OHM,1%,0.125W,TC=100 PPM;1206,T&R	80009	321-5006-00
A23R467	321-5018-00			RES,FXD:METAL FILM;1.0K OHM,1%,0.125W,TC=100 PPM;1206,T&R	80009	321-5018-00
A23R468	321-5018-00			RES,FXD:METAL FILM;1.0K OHM,1%,0.125W,TC=100 PPM;1206,T&R	80009	321-5018-00
A23R469	321-5018-00			RES,FXD:METAL FILM;1.0K OHM,1%,0.125W,TC=100 PPM;1206,T&R	80009	321-5018-00
A23R474	321-5018-00			RES,FXD:METAL FILM;1.0K OHM,1%,0.125W,TC=100 PPM;1206,T&R	80009	321-5018-00
A23R475	321-5018-00			RES,FXD:METAL FILM;1.0K OHM,1%,0.125W,TC=100 PPM;1206,T&R	80009	321-5018-00

Component No.	Tektronix Part No.	Serial/Assembly No. Effective	Dscont	Name & Description	Mfr. Code	Mfr. Part No.
A23R476	321-5018-00			RES,FXD:METAL FILM;1.0K OHM,1%,0.125W,TC=100 PPM;1206,T&R	80009	321-5018-00
A23R500	321-5018-00			RES,FXD:METAL FILM;1.0K OHM,1%,0.125W,TC=100 PPM;1206,T&R	80009	321-5018-00
A23R501	321-5018-00			RES,FXD:METAL FILM;1.0K OHM,1%,0.125W,TC=100 PPM;1206,T&R	80009	321-5018-00
A23R502	321-5018-00			RES,FXD:METAL FILM;1.0K OHM,1%,0.125W,TC=100 PPM;1206,T&R	80009	321-5018-00
A23R534	321-5050-00			RES,FXD:METAL FILM;33.2 OHM,1%,0.125W,TC=100 PPM;1206,T&R	57668	MCR18FWEA33E2
A23R535	321-5009-00			RES,FXD:METAL FILM;182 OHM,1%,0.125W,TC=100 PPM;1206,T&R	80009	321-5009-00
A23R536	321-5009-00			RES,FXD:METAL FILM;182 OHM,1%,0.125W,TC=100 PPM;1206,T&R	80009	321-5009-00
A23R537	321-5050-00			RES,FXD:METAL FILM;33.2 OHM,1%,0.125W,TC=100 PPM;1206,T&R	57668	MCR18FWEA33E2
A23R538	321-5000-00			RES,FXD:METAL FILM;10 OHM,1%,0.125W,TC=100 PPM;1206,T&R	57668	MCR18EZHFW10E
A23R545	321-5014-00			RES,FXD:METAL FILM;475 OHM,1%,0.125W,TC=100 PPM;1206,T&R	80009	321-5014-00
A23R546	321-5009-00			RES,FXD:METAL FILM;182 OHM,1%,0.125W,TC=100 PPM;1206,T&R	80009	321-5009-00
A23R547	321-5050-00			RES,FXD:METAL FILM;33.2 OHM,1%,0.125W,TC=100 PPM;1206,T&R	57668	MCR18FWEA33E2
A23R548	321-5009-00			RES,FXD:METAL FILM;182 OHM,1%,0.125W,TC=100 PPM;1206,T&R	80009	321-5009-00
A23R572	321-5018-00			RES,FXD:METAL FILM;1.0K OHM,1%,0.125W,TC=100 PPM;1206,T&R	80009	321-5018-00
A23R573	321-5018-00			RES,FXD:METAL FILM;1.0K OHM,1%,0.125W,TC=100 PPM;1206,T&R	80009	321-5018-00
A23R574	321-5018-00			RES,FXD:METAL FILM;1.0K OHM,1%,0.125W,TC=100 PPM;1206,T&R	80009	321-5018-00
A23T144	120-1720-00			TRANSFORMER,RF:BALUN,1:11 RATIO,TAPPED AT 4 TURNS,W/HOLDER,CORE 276-0712-00	0JR03	120-1720-00
A23T245	120-1720-00			TRANSFORMER,RF:BALUN,1:11 RATIO,TAPPED AT 4 TURNS,W/HOLDER,CORE 276-0712-00	0JR03	120-1720-00
A23T310	120-0902-00			XFMR,TOROID:	80009	120-0902-00
A23T320	120-1720-00			TRANSFORMER,RF:BALUN,1:11 RATIO,TAPPED AT 4 TURNS,W/HOLDER,CORE 276-0712-00	0JR03	120-1720-00
A23T336	120-0902-00			XFMR,TOROID:	80009	120-0902-00
A23T345	120-1720-00			TRANSFORMER,RF:BALUN,1:11 RATIO,TAPPED AT 4 TURNS,W/HOLDER,CORE 276-0712-00	0JR03	120-1720-00
A23T430	120-1720-00			TRANSFORMER,RF:BALUN,1:11 RATIO,TAPPED AT 4 TURNS,W/HOLDER,CORE 276-0712-00	0JR03	120-1720-00
A23T530	120-1720-00			TRANSFORMER,RF:BALUN,1:11 RATIO,TAPPED AT 4 TURNS,W/HOLDER,CORE 276-0712-00	0JR03	120-1720-00
A23T535	120-1720-00			TRANSFORMER,RF:BALUN,1:11 RATIO,TAPPED AT 4 TURNS,W/HOLDER,CORE 276-0712-00	0JR03	120-1720-00
A23U190	156-5298-00			IC,LINEAR:BIPOLAR,VOLTAGE REGULATOR;POSITIVE,5V,100MA,5%;MC78L05ACD,SO8.150,TUBE	80009	156-5298-00
A23U390	156-5021-01			IC,DIGITAL:CMOS,REGISTER;8-STAGE SHIFT/STORAGE, 3-STATE;4094,SO16.150,16MM T&R	80009	156-5021-01
A23U490	156-5088-00			IC,DIGITAL:HCTCMOS,DEMUX/DECODER;3-TO-8 DECODER;74HCT138,SO16.150,TUBE	80009	156-5088-00
A23U590	156-5081-01			IC,DIGITAL:HCTMOS,GATE;HEX INVERTER;74HCT04,SO14.150,16MM T&R	80009	156-5081-01
A23Y224	158-0338-00	B010101	B010166	XTAL UNIT,QTZ:2500 OHM,9KHZ	80009	158-0338-00

Component No.	Tektronix Part No.	Serial/Assembly No. Effective	Dscont	Name & Description	Mfr. Code	Mfr. Part No.
A23Y224	158-0372-00	B010167		XTAL UNIT,QTZ:SET OF 3 : 2 POLE MONOLITHIC CRYSTAL FILTER,CENTER FREQ 10 MHZ,PASSBAND (MATCHED SET WITH A23Y225)	80009	158-0372-00
A23Y225	158-0338-00	B010101	B010166	XTAL UNIT,QTZ:2500 OHM,9KHZ	80009	158-0338-00
A23Y225	158-0372-00	B010167		XTAL UNIT,QTZ:SET OF 3 : 2 POLE MONOLITHIC CRYSTAL FILTER,CENTER FREQ 10 MHZ,PASSBAND (MATCHED SET WITH A23Y224)	80009	158-0372-00
A23Y311	158-0337-00			XTAL UNIT,QTZ:IMPED 360 OHM,USED IN CRYSTAL FILTER:CENTER FREQ 10MHZPASSBAND 1 KHZ, SET OF 2 (MATCHED SET WITH A23Y337)	59492	158-0337-00
A23Y337	158-0337-00			XTAL UNIT,QTZ:IMPED 360 OHM,USED IN CRYSTAL FILTER:CENTER FREQ 10MHZPASSBAND 1 KHZ, SET OF 2 (MATCHED SET WITH A23Y311)	59492	158-0337-00
A23Y360	158-0324-00	B010101	B010166	XTAL UNIT,QTZ:SET OF 3 : 3 POLE MONOLITHIC CRYSTAL FILTERS, CENTER	34630	001-56-450
A23Y360	158-0372-00	B010167		XTAL UNIT,QTZ:SET OF 3 : 2 POLE MONOLITHIC CRYSTAL FILTER,CENTER FREQ 10 MHZ,PASSBAND	80009	158-0372-00
A23Y417	158-0356-00	B010100	B023247	XTAL UNIT,QTZ:10.000MHZ,+/-0.001 %,PARALLEL	80009	158-0356-00
A23Y417	158-0477-00	B023248		XTAL UNIT,QTZ:10.000MHZ,+/-15PPM,SERIES	80009	158-0477-00
A23Y426	158-0356-00	B010100	B023247	XTAL UNIT,QTZ:10.000MHZ,+/-0.001 %,PARALLEL	80009	158-0356-00
A23Y426	158-0477-00	B023248		XTAL UNIT,QTZ:10.000MHZ,+/-15PPM,SERIES	80009	158-0477-00
A23Y446	158-0356-00	B010100	B023247	XTAL UNIT,QTZ:10.000MHZ,+/-0.001 %,PARALLEL	80009	158-0356-00
A23Y446	158-0477-00	B023248		XTAL UNIT,QTZ:10.000MHZ,+/-15PPM,SERIES	80009	158-0477-00
A23Y458	158-0356-00	B010100	B023247	XTAL UNIT,QTZ:10.000MHZ,+/-0.001 %,PARALLEL	80009	158-0356-00
A23Y458	158-0477-00	B023248		XTAL UNIT,QTZ:10.000MHZ,+/-15PPM,SERIES	80009	158-0477-00
A24	119-3889-00	B010100	B011381	TRACK GEN ASSY:ISO AMP,RF AMP,TG PHASE LL,TG INTERFACE	80009	119-3889-00
A24	119-3889-06	B044200		TRACKING GEN AS:ISO AMP,RF AMP,TG PHASE LL, TG INTERFACE	80009	119-3889-06
A24C100	281-0825-00			CAP,FXD,CER DI:0.005UF,+100-0%,100V	33095	51-726-008
A24C110	281-0825-00			CAP,FXD,CER DI:0.005UF,+100-0%,100V	33095	51-726-008
A24C111	281-0825-00			CAP,FXD,CER DI:0.005UF,+100-0%,100V	33095	51-726-008
A24C120	281-0825-00			CAP,FXD,CER DI:0.005UF,+100-0%,100V	33095	51-726-008
A24C130	281-0825-00			CAP,FXD,CER DI:0.005UF,+100-0%,100V	33095	51-726-008
A24C132	281-0825-00			CAP,FXD,CER DI:0.005UF,+100-0%,100V	33095	51-726-008
A24C134	281-0825-00			CAP,FXD,CER DI:0.005UF,+100-0%,100V	33095	51-726-008
A24C136	281-0825-00			CAP,FXD,CER DI:0.005UF,+100-0%,100V	33095	51-726-008
A24C137	281-0825-00			CAP,FXD,CER DI:0.005UF,+100-0%,100V	33095	51-726-008
A24C138	281-0825-00			CAP,FXD,CER DI:0.005UF,+100-0%,100V	33095	51-726-008
A24C214	281-0825-00			CAP,FXD,CER DI:0.005UF,+100-0%,100V	33095	51-726-008
A24C233	281-0825-00			CAP,FXD,CER DI:0.005UF,+100-0%,100V	33095	51-726-008
A24C236	281-0825-00			CAP,FXD,CER DI:0.005UF,+100-0%,100V	33095	51-726-008
A24C237	281-0825-00			CAP,FXD,CER DI:0.005UF,+100-0%,100V	33095	51-726-008
A24C240	281-0825-00			CAP,FXD,CER DI:0.005UF,+100-0%,100V	33095	51-726-008
A24C312	281-0825-00			CAP,FXD,CER DI:0.005UF,+100-0%,100V	33095	51-726-008
A24C322	281-0825-00			CAP,FXD,CER DI:0.005UF,+100-0%,100V	33095	51-726-008
A24C331	281-0825-00			CAP,FXD,CER DI:0.005UF,+100-0%,100V	33095	51-726-008
A24C440	281-0825-00			CAP,FXD,CER DI:0.005UF,+100-0%,100V	33095	51-726-008
A24C501	281-0875-00			CAP,FXD,CER DI:100PF,20%,200V	72982	2425001X5U101M
A24FL1	389-0742-01			CIRCUIT BOARD:LOW PASS FILTER	80009	389-0742-01
A24A1	671-1547-02	B044200		CIRCUIT BD ASSY:TG INTERFACE	80009	671-1547-02
A24A1C131	290-5002-00			CAP,FXD,ELCTLT:10UF,20V	TK1424	20MC100M-TER
A24A1C133	283-5004-00			CAP,FXD,CER DI:0.1UF,10%,25V	80009	283-5004-00
A24A1C135	283-5004-00			CAP,FXD,CER DI:0.1UF,10%,25V	80009	283-5004-00
A24A1C200	283-5004-00			CAP,FXD,CER DI:0.1UF,10%,25V	80009	283-5004-00
A24A1C201	283-5014-00			CAP,FXD,CER DI:330PF,5%,50V	80009	283-5014-00
A24A1C210	283-5004-00			CAP,FXD,CER DI:0.1UF,10%,25V	80009	283-5004-00
A24A1C211	283-5014-00			CAP,FXD,CER DI:330PF,5%,50V	80009	283-5014-00

Component No.	Tektronix Part No.	Serial/Assembly No. Effective	Dscont	Name & Description	Mfr. Code	Mfr. Part No.
A24A1C212	283-5004-00			CAP,FXD,CER DI:0.1UF,10%,25V	80009	283-5004-00
A24A1C221	283-5004-00			CAP,FXD,CER DI:0.1UF,10%,25V	80009	283-5004-00
A24A1C230	283-5004-00			CAP,FXD,CER DI:0.1UF,10%,25V	80009	283-5004-00
A24A1C231	283-5004-00			CAP,FXD,CER DI:0.1UF,10%,25V	80009	283-5004-00
A24A1C232	283-5001-00			CAP,FXD,CER DI:100PF,5%,50V	80009	283-5001-00
A24A1C234	283-5004-00			CAP,FXD,CER DI:0.1UF,10%,25V	80009	283-5004-00
A24A1C235	283-5001-00			CAP,FXD,CER DI:100PF,5%,50V	80009	283-5001-00
A24A1C236	283-5004-00			CAP,FXD,CER DI:0.1UF,10%,25V	80009	283-5004-00
A24A1C300	283-5004-00			CAP,FXD,CER DI:0.1UF,10%,25V	80009	283-5004-00
A24A1C302	283-5004-00			CAP,FXD,CER DI:0.1UF,10%,25V	80009	283-5004-00
A24A1C303	283-5004-00			CAP,FXD,CER DI:0.1UF,10%,25V	80009	283-5004-00
A24A1C304	290-5002-00			CAP,FXD,ELCTLT:10UF,20V	TK1424	20MC100M-TER
A24A1C305	283-5112-00			CAP,FXD,CER DI:0.33UF,10%,25V	80009	283-5112-00
A24A1C306	283-5004-00			CAP,FXD,CER DI:0.1UF,10%,25V	80009	283-5004-00
A24A1C307	290-5002-00			CAP,FXD,ELCTLT:10UF,20V	TK1424	20MC100M-TER
A24A1C308	283-5004-00			CAP,FXD,CER DI:0.1UF,10%,25V	80009	283-5004-00
A24A1C320	283-5112-00			CAP,FXD,CER DI:0.33UF,10%,25V	80009	283-5112-00
A24A1C321	290-5002-00			CAP,FXD,ELCTLT:10UF,20V	TK1424	20MC100M-TER
A24A1C322	290-5002-00			CAP,FXD,ELCTLT:10UF,20V	TK1424	20MC100M-TER
A24A1C323	283-5112-00			CAP,FXD,CER DI:0.33UF,10%,25V	80009	283-5112-00
A24A1C324	283-5004-00			CAP,FXD,CER DI:0.1UF,10%,25V	80009	283-5004-00
A24A1C325	283-5112-00			CAP,FXD,CER DI:0.33UF,10%,25V	80009	283-5112-00
A24A1C326	290-5002-00			CAP,FXD,ELCTLT:10UF,20V	TK1424	20MC100M-TER
A24A1C327	283-5004-00			CAP,FXD,CER DI:0.1UF,10%,25V	80009	283-5004-00
A24A1C328	283-5004-00			CAP,FXD,CER DI:0.1UF,10%,25V	80009	283-5004-00
A24A1CR300	152-5004-00			DIODE,SIG:,ULTRA FAST;70V,0.15A,6NS,SER-PAI R;BAV99,SOT-23,8MM TR	25088	BAV99T
A24A1CR323	152-5004-00			DIODE,SIG:,ULTRA FAST;70V,0.15A,6NS,SER-PAI R;BAV99,SOT-23,8MM TR	25088	BAV99T
A24A1J300	131-3718-00		B034199	CONN,HDR:	80009	131-3718-00
A24A1J300	174-3730-00	B044200				
A24A1L130	108-5009-00			COIL,RF:FXD,82UH, +/- 10 %, Q=50, SRF 10 MH Z, DCR 7.0 OHM	80009	108-5009-00
A24A1Q130	151-5000-00			TRANSISTOR,SIG:BIPOLAR,PNP;40V,200MA,250MHZ ,AMPLIFIER;MMBT3906L,TO-236/SOT-23,8MM T&R	04713	MMBT3906LT1
A24A1Q131	151-5000-00			TRANSISTOR,SIG:BIPOLAR,PNP;40V,200MA,250MHZ ,AMPLIFIER;MMBT3906L,TO-236/SOT-23,8MM T&R	04713	MMBT3906LT1
A24A1Q132	151-5000-00			TRANSISTOR,SIG:BIPOLAR,PNP;40V,200MA,250MHZ ,AMPLIFIER;MMBT3906L,TO-236/SOT-23,8MM T&R	04713	MMBT3906LT1
A24A1Q133	151-5000-00			TRANSISTOR,SIG:BIPOLAR,PNP;40V,200MA,250MHZ ,AMPLIFIER;MMBT3906L,TO-236/SOT-23,8MM T&R	04713	MMBT3906LT1
A24A1Q134	151-5000-00			TRANSISTOR,SIG:BIPOLAR,PNP;40V,200MA,250MHZ ,AMPLIFIER;MMBT3906L,TO-236/SOT-23,8MM T&R	04713	MMBT3906LT1
A24A1Q135	151-5000-00			TRANSISTOR,SIG:BIPOLAR,PNP;40V,200MA,250MHZ ,AMPLIFIER;MMBT3906L,TO-236/SOT-23,8MM T&R	04713	MMBT3906LT1
A24A1Q200	151-5000-00			TRANSISTOR,SIG:BIPOLAR,PNP;40V,200MA,250MHZ ,AMPLIFIER;MMBT3906L,TO-236/SOT-23,8MM T&R	04713	MMBT3906LT1
A24A1Q201	151-5002-00			TRANSISTOR,SIG:JFET,N-CH;5V,75MA,60 OHM,SWI TCH;MMBF4392L,SOT-23,8MM T&R	80009	151-5002-00
A24A1Q220	151-5000-00			TRANSISTOR,SIG:BIPOLAR,PNP;40V,200MA,250MHZ ,AMPLIFIER;MMBT3906L,TO-236/SOT-23,8MM T&R	04713	MMBT3906LT1
A24A1Q221	151-5001-00			TRANSISTOR,SIG:BIPOLAR,NPN;40V,200MA,300MHZ ,AMPLIFIER;MMBT3904L,TO-236/SOT-23,8MM T&R	80009	151-5001-00
A24A1Q310	151-1127-00			TRANSISTOR,PWR:MOS,N-CH;60V,4.0A,0.6 OHM;IR F511,TO-220	81483	IRF511
A24A1Q320	151-1128-00			TRANSISTOR,PWR:MOS,P-CH;60V,6.0A,0.6 OHM;IR F9521,TO-220	80009	151-1128-00
A24A1Q321	151-1127-00			TRANSISTOR,PWR:MOS,N-CH;60V,4.0A,0.6 OHM;IR F511,TO-220	81483	IRF511

Component No.	Tektronix Part No.	Serial/Assembly No. Effective	Dscont	Name & Description	Mfr. Code	Mfr. Part No.
A24A1Q322	151-1128-00			TRANSISTOR,PWR:MOS,P-CH;60V,6.0A,0.6 OHM;IR F9521,TO-220	80009	151-1128-00
A24A1R130	321-5026-00			RES,FXD:METAL FILM;4.75K OHM,1%,0.125W,TC=1 00 PPM;1206,T&R	80009	321-5026-00
A24A1R131	321-5026-00			RES,FXD:METAL FILM;4.75K OHM,1%,0.125W,TC=1 00 PPM;1206,T&R	80009	321-5026-00
A24A1R132	321-5026-00			RES,FXD:METAL FILM;4.75K OHM,1%,0.125W,TC=1 00 PPM;1206,T&R	80009	321-5026-00
A24A1R133	321-5026-00			RES,FXD:METAL FILM;4.75K OHM,1%,0.125W,TC=1 00 PPM;1206,T&R	80009	321-5026-00
A24A1R134	321-5026-00			RES,FXD:METAL FILM;4.75K OHM,1%,0.125W,TC=1 00 PPM;1206,T&R	80009	321-5026-00
A24A1R135	321-5002-00			RES,FXD:METAL FILM;15 OHM,1%,0.125W,TC=100 PPM;1206,T&R	57668	MCR18EZHFW 15E0
A24A1R136	321-5026-00			RES,FXD:METAL FILM;4.75K OHM,1%,0.125W,TC=1 00 PPM;1206,T&R	80009	321-5026-00
A24A1R137	321-5018-00			RES,FXD:METAL FILM;1.0K OHM,1%,0.125W,TC=10 0 PPM;1206,T&R	80009	321-5018-00
A24A1R138	321-5006-00			RES,FXD:METAL FILM;100 OHM,1%,0.125W,TC=100 PPM;1206,T&R	80009	321-5006-00
A24A1R139	321-5006-00			RES,FXD:METAL FILM;100 OHM,1%,0.125W,TC=100 PPM;1206,T&R	80009	321-5006-00
A24A1R140	321-5030-00			RES,FXD:METAL FILM;10.0K OHM,1%,0.125W,TC=1 00 PPM;1206,T&R	80009	321-5030-00
A24A1R141	321-5027-00			RES,FXD:METAL FILM;5.62K OHM,1%,0.125W,TC=1 00 PPM;1206,T&R	80009	321-5027-00
A24A1R142	321-5023-00			RES,FXD:METAL FILM;2.74K OHM,1%,0.125W,TC=1 00 PPM;1206,T&R	80009	321-5023-00
A24A1R200	321-5018-00			RES,FXD:METAL FILM;1.0K OHM,1%,0.125W,TC=10 0 PPM;1206,T&R	80009	321-5018-00
A24A1R201	321-5036-00			RES,FXD:METAL FILM;33.2K OHM,1%,0.125W,TC=1 00 PPM;1206,T&R	80009	321-5036-00
A24A1R202	321-5041-00			RES,FXD:METAL FILM;82.5K OHM,1%,0.125W,TC=1 00 PPM;1206,T&R	80009	321-5041-00
A24A1R203	311-5038-00			RES,VAR,TRMR:CERMET;20K OHM,25%,0.25W,4MM S Q,TOP ADJ;SMD,T&R	80009	311-5038-00
A24A1R204	321-5006-00			RES,FXD:METAL FILM;100 OHM,1%,0.125W,TC=100 PPM;1206,T&R	80009	321-5006-00
A24A1R205	321-5047-00			RES,FXD:METAL FILM;100K OHM,1%,0.125W,TC=10 0 PPM;1206,T&R	80009	321-5047-00
A24A1R206	321-5029-00			RES,FXD:METAL FILM;8.25K OHM,1%,0.125W,TC=1 00 PPM;1206,T&R	80009	321-5029-00
A24A1R207	321-5030-00			RES,FXD:METAL FILM;10.0K OHM,1%,0.125W,TC=1 00 PPM;1206,T&R	80009	321-5030-00
A24A1R208	321-5027-00			RES,FXD:METAL FILM;5.62K OHM,1%,0.125W,TC=1 00 PPM;1206,T&R	80009	321-5027-00
A24A1R210	321-5030-00			RES,FXD:METAL FILM;10.0K OHM,1%,0.125W,TC=1 00 PPM;1206,T&R	80009	321-5030-00
A24A1R211	321-5030-00			RES,FXD:METAL FILM;10.0K OHM,1%,0.125W,TC=1 00 PPM;1206,T&R	80009	321-5030-00
A24A1R212	321-5030-00			RES,FXD:METAL FILM;10.0K OHM,1%,0.125W,TC=1 00 PPM;1206,T&R	80009	321-5030-00
A24A1R213	321-5034-00			RES,FXD:METAL FILM;22.1K OHM,1%,0.125W,TC=1 00 PPM;1206,T&R	80009	321-5034-00
A24A1R214	311-5038-00			RES,VAR,TRMR:CERMET;20K OHM,25%,0.25W,4MM S Q,TOP ADJ;SMD,T&R	80009	311-5038-00
A24A1R215	321-5030-00			RES,FXD:METAL FILM;10.0K OHM,1%,0.125W,TC=1 00 PPM;1206,T&R	80009	321-5030-00

Component No.	Tektronix Part No.	Serial/Assembly No. Effective	Dscont	Name & Description	Mfr. Code	Mfr. Part No.
A24A1R220	321-5047-00			RES,FXD:METAL FILM;100K OHM,1%,0.125W,TC=100 PPM;1206;T&R	80009	321-5047-00
A24A1R221	321-5030-00			RES,FXD:METAL FILM;10.0K OHM,1%,0.125W,TC=100 PPM;1206,T&R	80009	321-5030-00
A24A1R222	321-5030-00			RES,FXD:METAL FILM;10.0K OHM,1%,0.125W,TC=100 PPM;1206,T&R	80009	321-5030-00
A24A1R223	321-5049-00			RES,FXD:METAL FILM;1M OHM,1%,0.125W,TC=100 PPM;1206,T&R	80009	321-5049-00
A24A1R230	321-5035-00			RES,FXD:METAL FILM;27.4K OHM,1%,0.125W,TC=100 PPM;1206,T&R	80009	321-5035-00
A24A1R231	321-5041-00			RES,FXD:METAL FILM;82.5K OHM,1%,0.125W,TC=100 PPM;1206,T&R	80009	321-5041-00
A24A1R232	321-5006-00			RES,FXD:METAL FILM;100 OHM,1%,0.125W,TC=100 PPM;1206,T&R	80009	321-5006-00
A24A1R233	321-5047-00			RES,FXD:METAL FILM;100K OHM,1%,0.125W,TC=100 PPM;1206,T&R	80009	321-5047-00
A24A1R234	321-5006-00			RES,FXD:METAL FILM;100 OHM,1%,0.125W,TC=100 PPM;1206,T&R	80009	321-5006-00
A24A1R235	321-5006-00			RES,FXD:METAL FILM;100 OHM,1%,0.125W,TC=100 PPM;1206,T&R	80009	321-5006-00
A24A1R300	321-5012-00			RES,FXD:METAL FILM;332 OHM,1%,0.125W,TC=100 PPM;1206,T&R	80009	321-5012-00
A24A1R301	321-5030-00			RES,FXD:METAL FILM;10.0K OHM,1%,0.125W,TC=100 PPM;1206,T&R	80009	321-5030-00
A24A1R302	321-5018-00			RES,FXD:METAL FILM;1.0K OHM,1%,0.125W,TC=100 PPM;1206,T&R	80009	321-5018-00
A24A1R303	321-5026-00			RES,FXD:METAL FILM;4.75K OHM,1%,0.125W,TC=100 PPM;1206,T&R	80009	321-5026-00
A24A1R304	321-5018-00			RES,FXD:METAL FILM;1.0K OHM,1%,0.125W,TC=100 PPM;1206,T&R	80009	321-5018-00
A24A1R305	321-5006-00			RES,FXD:METAL FILM;100 OHM,1%,0.125W,TC=100 PPM;1206,T&R	80009	321-5006-00
A24A1R306	321-5023-00			RES,FXD:METAL FILM;2.74K OHM,1%,0.125W,TC=100 PPM;1206,T&R	80009	321-5023-00
A24A1R307	321-5006-00			RES,FXD:METAL FILM;100 OHM,1%,0.125W,TC=100 PPM;1206,T&R	80009	321-5006-00
A24A1R309	321-5023-00			RES,FXD:METAL FILM;2.74K OHM,1%,0.125W,TC=100 PPM;1206,T&R	80009	321-5023-00
A24A1R310	321-5006-00			RES,FXD:METAL FILM;100 OHM,1%,0.125W,TC=100 PPM;1206,T&R	80009	321-5006-00
A24A1R311	321-5032-00			RES,FXD:METAL FILM;15.0K OHM,1%,0.125W,TC=100 PPM;1206,T&R	80009	321-5032-00
A24A1R312	321-5028-00			RES,FXD:METAL FILM;6.81K OHM,1%,0.125W,TC=100 PPM;1206,T&R	80009	321-5028-00
A24A1R313	321-5031-00			RES,FXD:METAL FILM;12.1K OHM,1%,0.125W,TC=100 PPM;1206,T&R	80009	321-5031-00
A24A1R314	321-5033-00			RES,FXD:METAL FILM;18.2K OHM,1%,0.125W,TC=100 PPM;1206,T&R	80009	321-5033-00
A24A1R315	321-5018-00			RES,FXD:METAL FILM;1.0K OHM,1%,0.125W,TC=100 PPM;1206,T&R	80009	321-5018-00
A24A1R316	321-5030-00			RES,FXD:METAL FILM;10.0K OHM,1%,0.125W,TC=100 PPM;1206,T&R	80009	321-5030-00
A24A1R317	321-5038-00			RES,FXD:METAL FILM;47.5K OHM,1%,0.125W,TC=100 PPM;1206,T&R	80009	321-5038-00
A24A1R318	321-5035-00			RES,FXD:METAL FILM;27.4K OHM 1%.0.125W,TC=100 PPM;1206,T&R	80009	321-5035-00
A24A1R319	321-5006-00			RES,FXD:METAL FILM;100 OHM,1%,0.125W,TC=100 PPM;1206,T&R	80009	321-5006-00

Component No.	Tektronix Part No.	Serial/Assembly No. Effective	Dscont	Name & Description	Mfr. Code	Mfr. Part No.
A24A1R320	321-5018-00			RES,FXD:METAL FILM;1.0K OHM,1%,0.125W,TC=100 PPM;1206,T&R	80009	321-5018-00
A24A1R321	321-5006-00			RES,FXD:METAL FILM;100 OHM,1%,0.125W,TC=100 PPM;1206,T&R	80009	321-5006-00
A24A1R322	321-5026-00			RES,FXD:METAL FILM;4.75K OHM,1%,0.125W,TC=100 PPM;1206,T&R	80009	321-5026-00
A24A1R323	321-5026-00			RES,FXD:METAL FILM;4.75K OHM,1%,0.125W,TC=100 PPM;1206,T&R	80009	321-5026-00
A24A1R324	321-5006-00			RES,FXD:METAL FILM;100 OHM,1%,0.125W,TC=100 PPM;1206,T&R	80009	321-5006-00
A24A1R325	321-5006-00			RES,FXD:METAL FILM;100 OHM,1%,0.125W,TC=100 PPM;1206,T&R	80009	321-5006-00
A24A1R326	321-5006-00			RES,FXD:METAL FILM;100 OHM,1%,0.125W,TC=100 PPM;1206,T&R	80009	321-5006-00
A24A1R327	321-5034-00			RES,FXD:METAL FILM;22.1K OHM,1%,0.125W,TC=100 PPM;1206,T&R	80009	321-5034-00
A24A1R328	321-5033-00			RES,FXD:METAL FILM;18.2K OHM,1%,0.125W,TC=100 PPM;1206,T&R	80009	321-5033-00
A24A1R329	311-5038-00			RES,VAR,TRMR:CERMET;20K OHM,25%,0.25W,4MM SQ,TOP ADJ;SMD,T&R	80009	311-5038-00
A24A1R330	321-5026-00			RES,FXD:METAL FILM;4.75K OHM,1%,0.125W,TC=100 PPM;1206,T&R	80009	321-5026-00
A24A1R331	321-5018-00			RES,FXD:METAL FILM;1.0K OHM,1%,0.125W,TC=100 PPM;1206,T&R	80009	321-5018-00
A24A1R332	321-5049-00			RES,FXD:METAL FILM;1M OHM,1%,0.125W,TC=100 PPM;1206,T&R	80009	321-5049-00
A24A1R333	321-5018-00			RES,FXD:METAL FILM;1.0K OHM,1%,0.125W,TC=100 PPM;1206,T&R	80009	321-5018-00
A24A1R334	321-5018-00			RES,FXD:METAL FILM;1.0K OHM,1%,0.125W,TC=100 PPM;1206,T&R	80009	321-5018-00
A24A1R335	321-5030-00			RES,FXD:METAL FILM;10.0K OHM,1%,0.125W,TC=100 PPM;1206,T&R	80009	321-5030-00
A24A1R336	321-5018-00			RES,FXD:METAL FILM;1.0K OHM,1%,0.125W,TC=100 PPM;1206,T&R	80009	321-5018-00
A24A1R337	321-5035-00			RES,FXD:METAL FILM;27.4K OHM,1%,0.125W,TC=100 PPM;1206,T&R	80009	321-5035-00
A24A1R338	321-5018-00			RES,FXD:METAL FILM;1.0K OHM,1%,0.125W,TC=100 PPM;1206,T&R	80009	321-5018-00
A24A1R339	321-5006-00			RES,FXD:METAL FILM;100 OHM,1%,0.125W,TC=100 PPM;1206,T&R	80009	321-5006-00
A24A1R340	321-5006-00			RES,FXD:METAL FILM;100 OHM,1%,0.125W,TC=100 PPM;1206,T&R	80009	321-5006-00
A24A1R341	321-5023-00			RES,FXD:METAL FILM;2.74K OHM,1%,0.125W,TC=100 PPM;1206,T&R	80009	321-5023-00
A24A1R343	321-5030-00			RES,FXD:METAL FILM;10.0K OHM,1%,0.125W,TC=100 PPM;1206,T&R	80009	321-5030-00
A24A1R344	321-5030-00			RES,FXD:METAL FILM;10.0K OHM,1%,0.125W,TC=100 PPM;1206,T&R	80009	321-5030-00
A24A1R345	321-5026-00			RES,FXD:METAL FILM;4.75K OHM,1%,0.125W,TC=100 PPM;1206,T&R	80009	321-5026-00
A24A1R346	321-5026-00			RES,FXD:METAL FILM;4.75K OHM,1%,0.125W,TC=100 PPM;1206,T&R	80009	321-5026-00
A24A1R347	321-5026-00			RES,FXD:METAL FILM;4.75K OHM,1%,0.125W,TC=100 PPM;1206,T&R	80009	321-5026-00
A24A1U130	156-5018-00			IC,LINEAR:BIPOLAR,OP-AMP;DUAL,SINGLE SUPPLY;LM358D,SO8.150,TUBE	80009	156-5018-00
A24A1U201	156-5155-00			IC,DIGITAL:HCMOS,GATE;HEX INV;74HC04,SO14.150,TUBE	80009	156-5155-00

Component No.	Tektronix Part No.	Serial/Assembly No. Effective	Dscont	Name & Description	Mfr. Code	Mfr. Part No.
A24A1U202	156-5018-00			IC,LINEAR:BIPOLAR,OP-AMP;DUAL,SINGLE SUPPLY ;LM358D,SO8.150,TUBE	80009	156-5018-00
A24A1U204	156-5018-00			IC,LINEAR:BIPOLAR,OP-AMP;DUAL,SINGLE SUPPLY ;LM358D,SO8.150,TUBE	80009	156-5018-00
A24A1U210	156-5227-00			IC,DIGITAL:HCMOS,MULTIVIBRATOR;DUAL RETRIG MONOSTABLE, WITH RESET;74HC123,SO16.150	80009	156-5227-00
A24A1U220	156-5021-01			IC,DIGITAL:CMOS,REGISTER;8-STAGE SHIFT/STOR AGE, 3-STATE;4094,SO16.150,16MM T&R	80009	156-5021-01
A24A1U221	156-5021-01			IC,DIGITAL:CMOS,REGISTER;8-STAGE SHIFT/STOR AGE, 3-STATE;4094,SO16.150,16MM T&R	80009	156-5021-01
A24A1U230	156-5021-01			IC,DIGITAL:CMOS,REGISTER;8-STAGE SHIFT/STOR AGE, 3-STATE;4094,SO16.150,16MM T&R	80009	156-5021-01
A24A1U231	156-5300-00			IC,CONVERTER:	80009	156-5300-00
A24A1U232	156-5018-00			IC,LINEAR:BIPOLAR,OP-AMP;DUAL,SINGLE SUPPLY ;LM358D,SO8.150,TUBE	80009	156-5018-00
A24A1U234	156-5274-01			IC,MISC:CMOS,ANALOG SWITCH;QUAD;DG211,SO16. 150,16MM T&R	80009	156-5274-01
A24A1U310	156-5018-00			IC,LINEAR:BIPOLAR,OP-AMP;DUAL,SINGLE SUPPLY ;LM358D,SO8.150,TUBE	80009	156-5018-00
A24A1U320	156-5018-00			IC,LINEAR:BIPOLAR,OP-AMP;DUAL,SINGLE SUPPLY ;LM358D,SO8.150,TUBE	80009	156-5018-00
A24A1U321	156-5018-00			IC,LINEAR:BIPOLAR,OP-AMP;DUAL,SINGLE SUPPLY ;LM358D,SO8.150,TUBE	80009	156-5018-00
A24A1VR200	152-0526-00			DIODE,ZENER:,;6.35V,1%,0.4W;1N829A FMLY,DO-7	14552	DT840615A
A24A2	671-1544-00			CIRCUIT BD ASSY:TG PHASE LOCK LOOP	80009	671-1544-00
A24A2C100	283-5002-00			CAP,FXD,CER DI:1000PF,10%,50V	80009	283-5002-00
A24A2C101	283-5002-00			CAP,FXD,CER DI:1000PF,10%,50V	80009	283-5002-00
A24A2C110	283-5002-00			CAP,FXD,CER DI:1000PF,10%,50V	80009	283-5002-00
A24A2C120	283-5011-00			CAP,FXD,CER DI:33PF,5%,50V	95275	VJ1206A330JXA
A24A2C122	283-5002-00			CAP,FXD,CER DI:1000PF,10%,50V	80009	283-5002-00
A24A2C125	283-5003-00			CAP,FXD,CER DI:0.01UF,10%,50V	80009	283-5003-00
A24A2C180	283-5005-00			CAP,FXD,CER DI:4PF,+/- 0.25PF,50V	54583	C3216C0G1H040C
A24A2C210	283-5004-00			CAP,FXD,CER DI:0.1UF,10%,25V	80009	283-5004-00
A24A2C220	283-5004-00			CAP,FXD,CER DI:0.1UF,10%,25V	80009	283-5004-00
A24A2C221	283-5004-00			CAP,FXD,CER DI:0.1UF,10%,25V	80009	283-5004-00
A24A2C222	283-5001-00			CAP,FXD,CER DI:100PF,5%,50V	80009	283-5001-00
A24A2C230	283-5004-00			CAP,FXD,CER DI:0.1UF,10%,25V	80009	283-5004-00
A24A2C231	283-5011-00			CAP,FXD,CER DI:33PF,5%,50V	95275	VJ1206A330JXA
A24A2C232	283-5001-00			CAP,FXD,CER DI:100PF,5%,50V	80009	283-5001-00
A24A2C250	283-5005-00			CAP,FXD,CER DI:4PF,+/- 0.25PF,50V	54583	C3216C0G1H040C
A24A2C300	283-5002-00			CAP,FXD,CER DI:1000PF,10%,50V	80009	283-5002-00
A24A2C303	283-5003-00			CAP,FXD,CER DI:0.01UF,10%,50V	80009	283-5003-00
A24A2C310	283-5004-00			CAP,FXD,CER DI:0.1UF,10%,25V	80009	283-5004-00
A24A2C311	283-5002-00			CAP,FXD,CER DI:1000PF,10%,50V	80009	283-5002-00
A24A2C312	283-5004-00			CAP,FXD,CER DI:0.1UF,10%,25V	80009	283-5004-00
A24A2C313	283-5002-00			CAP,FXD,CER DI:1000PF,10%,50V	80009	283-5002-00
A24A2C314	283-5002-00			CAP,FXD,CER DI:1000PF,10%,50V	80009	283-5002-00
A24A2C330	283-5002-00			CAP,FXD,CER DI:1000PF,10%,50V	80009	283-5002-00
A24A2C360	290-5002-00			CAP,FXD,ELCTLT:10UF,20V	TK1424	20MC100M-TER
A24A2C361	290-5002-00			CAP,FXD,ELCTLT:10UF,20V	TK1424	20MC100M-TER
A24A2C370	283-5005-00			CAP,FXD,CER DI:4PF,+/- 0.25PF,50V	54583	C3216C0G1H040C
A24A2C400	283-5004-00			CAP,FXD,CER DI:0.1UF,10%,25V	80009	283-5004-00
A24A2C401	283-5003-00			CAP,FXD,CER DI:0.01UF,10%,50V	80009	283-5003-00
A24A2C410	283-5004-00			CAP,FXD,CER DI:0.1UF,10%,25V	80009	283-5004-00
A24A2C411	283-5002-00			CAP,FXD,CER DI:1000PF,10%,50V	80009	283-5002-00
A24A2C420	281-0283-00			CAP,VAR,CER DI:MULTI-TURN TRIMER;6.5PF-30 P F,100V,TOP-ADJ;SMD,T&R	80009	281-0283-00
A24A2C430	283-5004-00			CAP,FXD,CER DI:0.1UF,10%,25V	80009	283-5004-00

Component No.	Tektronix Part No.	Serial/Assembly No. Effective	Dscont	Name & Description	Mfr. Code	Mfr. Part No.
A24A2C431	283-5004-00			CAP,FXD,CER DI:0.1UF,10%,25V	80009	283-5004-00
A24A2C450	283-5004-00			CAP,FXD,CER DI:0.1UF,10%,25V	80009	283-5004-00
A24A2C451	283-5004-00			CAP,FXD,CER DI:0.1UF,10%,25V	80009	283-5004-00
A24A2C452	283-5004-00			CAP,FXD,CER DI:0.1UF,10%,25V	80009	283-5004-00
A24A2C500	283-5004-00			CAP,FXD,CER DI:0.1UF,10%,25V	80009	283-5004-00
A24A2C530	283-5004-00			CAP,FXD,CER DI:0.1UF,10%,25V	80009	283-5004-00
A24A2C531	283-5004-00			CAP,FXD,CER DI:0.1UF,10%,25V	80009	283-5004-00
A24A2C540	283-5004-00			CAP,FXD,CER DI:0.1UF,10%,25V	80009	283-5004-00
A24A2C541	283-5004-00			CAP,FXD,CER DI:0.1UF,10%,25V	80009	283-5004-00
A24A2C550	283-5004-00			CAP,FXD,CER DI:0.1UF,10%,25V	80009	283-5004-00
A24A2C560	290-5002-00			CAP,FXD,ELCTLT:10UF,20V	TK1424	20MC100M-TER
A24A2C561	290-5002-00			CAP,FXD,ELCTLT:10UF,20V	TK1424	20MC100M-TER
A24A2C650	283-5005-00			CAP,FXD,CER DI:4PF,+/- 0.25PF,50V	54583	C3216C0G1H040C
A24A2CR270	152-5066-00			DIODE,SIG:,PIN;100V,0.35PF,1.0K OHMS,800NS; HSMP-3800,SOT-23,TR	80009	152-5066-00
A24A2CR340	152-5004-00			DIODE,SIG:,ULTRA FAST;70V,0.15A,6NS,SER-PAI R;BAV99,SOT-23,8MM TR	25088	BAV99T
A24A2CR350	152-5000-00			SEMICOND DVC,DI:SW,SI,70V,COM CATHODE	80009	152-5000-00
A24A2CR351	152-5000-00			SEMICOND DVC,DI:SW,SI,70V,COM CATHODE	80009	152-5000-00
A24A2CR412	152-5004-00			DIODE,SIG:,ULTRA FAST;70V,0.15A,6NS,SER-PAI R;BAV99,SOT-23,8MM TR	25088	BAV99T
A24A2CR440	152-5000-00			SEMICOND DVC,DI:SW,SI,70V,COM CATHODE	80009	152-5000-00
A24A2CR510	152-5057-00			DIODE,SIG:,VVC;30V,2.3PF @ 25V;MMBV105GL,SO T-23,8MM T&R	80009	152-5057-00
A24A2CR540	152-5000-00			SEMICOND DVC,DI:SW,SI,70V,COM CATHODE	80009	152-5000-00
A24A2CR650	152-5004-00			DIODE,SIG:,ULTRA FAST;70V,0.15A,6NS,SER-PAI R;BAV99,SOT-23,8MM TR	25088	BAV99T
A24A2CR651	152-5004-00			DIODE,SIG:,ULTRA FAST;70V,0.15A,6NS,SER-PAI R;BAV99,SOT-23,8MM TR	25088	BAV99T
A24A2L420	108-5005-00			COIL,RF:	80009	108-5005-00
A24A2L421	108-5030-00			COIL,RF:FXD,100NH, +/- 10 %,Q=25,SRF 950 MH Z,DCR 0.56 OHM, I	80009	108-5030-00
A24A2Q120	151-5010-00			TRANSISTOR,SIG:BIPOLAR,NPN;12V,200MA,6.5GHZ ,AMPLIFIER;NE85634/2SC3357,SOT-89,12MM T/R	80009	151-5010-00
A24A2Q260	151-5005-00			TRANSISTOR,SIG:BIPOLAR,PNP;20V,1.0A,60MHZ,A MPLIFIER;BCX69/BC869,SOT-89,12MM T/R	04713	BCX69T1
A24A2Q320	151-5011-00			TRANSISTOR,SIG:BIPOLAR,NPN;12V,50MA,900MHZ, AMPLIFIER;MMBR5179L,TO-236/SOT-23,8MM T&R	80009	151-5011-00
A24A2Q321	151-5011-00			TRANSISTOR,SIG:BIPOLAR,NPN;12V,50MA,900MHZ, AMPLIFIER;MMBR5179L,TO-236/SOT-23,8MM T&R	80009	151-5011-00
A24A2Q350	151-5001-00			TRANSISTOR,SIG:BIPOLAR,NPN;40V,200MA,300MHZ ,AMPLIFIER;MMBT3904L,TO-236/SOT-23,8MM T&R	80009	151-5001-00
A24A2Q360	151-5004-00			TRANSISTOR,SIG:BIPOLAR,NPN;20V,1.0A,65MHZ,A MPLIFIER;BCX68/BC868,SOT-89,12MM T/R	04713	BCX68
A24A2Q410	151-5011-00			TRANSISTOR,SIG:BIPOLAR,NPN;12V,50MA,900MHZ, AMPLIFIER;MMBR5179L,TO-236/SOT-23,8MM T&R	80009	151-5011-00
A24A2Q411	151-5011-00			TRANSISTOR,SIG:BIPOLAR,NPN;12V,50MA,900MHZ, AMPLIFIER;MMBR5179L,TO-236/SOT-23,8MM T&R	80009	151-5011-00
A24A2Q420	151-5011-00			TRANSISTOR,SIG:BIPOLAR,NPN;12V,50MA,900MHZ, AMPLIFIER;MMBR5179L,TO-236/SOT-23,8MM T&R	80009	151-5011-00
A24A2Q421	151-5000-00			TRANSISTOR,SIG:BIPOLAR,PNP;40V,200MA,250MHZ ,AMPLIFIER;MMBT3906L,TO-236/SOT-23,8MM T&R	04713	MMBT3906LT1
A24A2Q430	151-5001-00			TRANSISTOR,SIG:BIPOLAR,NPN;40V,200MA,300MHZ ,AMPLIFIER;MMBT3904L,TO-236/SOT-23,8MM T&R	80009	151-5001-00
A24A2Q450	151-5004-00			TRANSISTOR,SIG:BIPOLAR,NPN;20V,1.0A,65MHZ,A MPLIFIER;BCX68/BC868,SOT-89,12MM T/R	04713	BCX68
A24A2Q540	151-5000-00			TRANSISTOR,SIG:BIPOLAR,PNP;40V,200MA,250MHZ ,AMPLIFIER;MMBT3906L,TO-236/SOT-23,8MM T&R	04713	MMBT3906LT1

Component No.	Tektronix Part No.	Serial/Assembly No. Effective	Dscont	Name & Description	Mfr. Code	Mfr. Part No.
A24A2Q550	151-5000-00			TRANSISTOR,SIG:BIPOLAR,PNP;40V,200MA,250MHZ ,AMPLIFIER;MMBT3906L,TO-236/SOT-23,8MM T&R	04713	MMBT3906LT1
A24A2R120	321-5008-00			RES,FXD:METAL FILM;150 OHM,1%,0.125W,TC=100 PPM;1206,T&R	80009	321-5008-00
A24A2R121	321-5042-00			RES,FXD:METAL FILM;39.2 OHM,1%,0.125W,TC=10 0 PPM;1206,T&R	80009	321-5042-00
A24A2R122	321-5015-00			RES,FXD:METAL FILM;562 OHM,1%,0.125W,TC=100 PPM;1206,T&R	80009	321-5015-00
A24A2R130	321-5008-00			RES,FXD:METAL FILM;150 OHM,1%,0.125W,TC=100 PPM;1206,T&R	80009	321-5008-00
A24A2R131	321-5008-00			RES,FXD:METAL FILM;150 OHM,1%,0.125W,TC=100 PPM;1206,T&R	80009	321-5008-00
A24A2R140	321-5051-00			RES,FXD:METAL FILM;0 OHM,1%,0.125W,TC=100 P PM;1206,T&R	80009	321-5051-00
A24A2R141	321-5009-00			RES,FXD:METAL FILM;182 OHM,1%,0.125W,TC=100 PPM;1206,T&R	80009	321-5009-00
A24A2R143	321-5043-00			RES,FXD:METAL FILM;47.5 OHM,1%,0.125W,TC=10 0 PPM;1206,T&R	80009	321-5043-00
A24A2R152	321-5051-00			RES,FXD:METAL FILM;0 OHM,1%,0.125W,TC=100 P PM;1206,T&R	80009	321-5051-00
A24A2R153	321-5043-00			RES,FXD:METAL FILM;47.5 OHM,1%,0.125W,TC=10 0 PPM;1206,T&R	80009	321-5043-00
A24A2R155	321-5043-00			RES,FXD:METAL FILM;47.5 OHM,1%,0.125W,TC=10 0 PPM;1206,T&R	80009	321-5043-00
A24A2R200	321-5014-00			RES,FXD:METAL FILM;475 OHM,1%,0.125W,TC=100 PPM;1206,T&R	80009	321-5014-00
A24A2R220	321-5043-00			RES,FXD:METAL FILM;47.5 OHM,1%,0.125W,TC=10 0 PPM;1206,T&R	80009	321-5043-00
A24A2R221	321-5004-00			RES,FXD:METAL FILM;22.1 OHM,1%,0.125W,TC=10 0 PPM;1206,T&R	80009	321-5004-00
A24A2R230	321-5000-00			RES,FXD:METAL FILM;10 OHM,1%,0.125W,TC=100 PPM;1206,T&R	57668	MCR18EZHFW10E
A24A2R240	321-5050-00			RES,FXD:METAL FILM;33.2 OHM,1%,0.125W,TC=10 0 PPM;1206,T&R	57668	MCR18FWEA33E2
A24A2R241	321-5012-00			RES,FXD:METAL FILM;332 OHM,1%,0.125W,TC=100 PPM;1206,T&R	80009	321-5012-00
A24A2R242	321-5012-00			RES,FXD:METAL FILM;332 OHM,1%,0.125W,TC=100 PPM;1206,T&R	80009	321-5012-00
A24A2R243	321-5002-00			RES,FXD:METAL FILM;15 OHM,1%,0.125W,TC=100 PPM;1206,T&R	57668	MCR18EZHFW 15E0
A24A2R300	321-5018-00			RES,FXD:METAL FILM;1.0K OHM,1%,0.125W,TC=10 0 PPM;1206,T&R	80009	321-5018-00
A24A2R301	321-5012-00			RES,FXD:METAL FILM;332 OHM,1%,0.125W,TC=100 PPM;1206,T&R	80009	321-5012-00
A24A2R310	321-5018-00			RES,FXD:METAL FILM;1.0K OHM,1%,0.125W,TC=10 0 PPM;1206,T&R	80009	321-5018-00
A24A2R311	321-5012-00			RES,FXD:METAL FILM;332 OHM,1%,0.125W,TC=100 PPM;1206,T&R	80009	321-5012-00
A24A2R312	321-5012-00			RES,FXD:METAL FILM;332 OHM,1%,0.125W,TC=100 PPM;1206,T&R	80009	321-5012-00
A24A2R313	321-5043-00			RES,FXD:METAL FILM;47.5 OHM,1%,0.125W,TC=10 0 PPM;1206,T&R	80009	321-5043-00
A24A2R314	321-5050-00			RES,FXD:METAL FILM;33.2 OHM,1%,0.125W,TC=10 0 PPM;1206,T&R	57668	MCR18FWEA33E2
A24A2R315	321-5012-00			RES,FXD:METAL FILM;332 OHM,1%,0.125W,TC=100 PPM;1206,T&R	80009	321-5012-00
A24A2R320	321-5017-00			RES,FXD:METAL FILM;825 OHM,1%,0.125W,TC=100 PPM;1206,T&R	80009	321-5017-00

Component No.	Tektronix Part No.	Serial/Assembly No. Effective	Dscont	Name & Description	Mfr. Code	Mfr. Part No.
A24A2R321	321-5043-00			RES,FXD:METAL FILM;47.5 OHM,1%,0.125W,TC=100 PPM;1206,T&R	80009	321-5043-00
A24A2R330	321-5008-00			RES,FXD:METAL FILM;150 OHM,1%,0.125W,TC=100 PPM;1206,T&R	80009	321-5008-00
A24A2R331	321-5000-00			RES,FXD:METAL FILM;10 OHM,1%,0.125W,TC=100 PPM;1206,T&R	57668	MCR18EZHFW10E
A24A2R332	321-5008-00			RES,FXD:METAL FILM;150 OHM,1%,0.125W,TC=100 PPM;1206,T&R	80009	321-5008-00
A24A2R333	321-5022-00			RES,FXD:METAL FILM;2.21K OHM,1%,0.125W,TC=100 PPM;1206,T&R	80009	321-5022-00
A24A2R334	321-5008-00			RES,FXD:METAL FILM;150 OHM,1%,0.125W,TC=100 PPM;1206,T&R	80009	321-5008-00
A24A2R335	311-5011-00			RES,VAR,NONWW:5K OHM,20%,0.2W	32997	3335W-1-502E
A24A2R340	321-5030-00			RES,FXD:METAL FILM;10.0K OHM,1%,0.125W,TC=100 PPM;1206,T&R	80009	321-5030-00
A24A2R341	321-5024-00			RES,FXD:METAL FILM;3.32K OHM,1%,0.125W,TC=100 PPM;1206,T&R	80009	321-5024-00
A24A2R342	321-5018-00			RES,FXD:METAL FILM;1.0K OHM,1%,0.125W,TC=100 PPM;1206,T&R	80009	321-5018-00
A24A2R343	321-5037-00			RES,FXD:METAL FILM;39.2K OHM,1%,0.125W,TC=100 PPM;1206,T&R	80009	321-5037-00
A24A2R344	321-5030-00			RES,FXD:METAL FILM;10.0K OHM,1%,0.125W,TC=100 PPM;1206,T&R	80009	321-5030-00
A24A2R350	321-5022-00			RES,FXD:METAL FILM;2.21K OHM,1%,0.125W,TC=100 PPM;1206,T&R	80009	321-5022-00
A24A2R351	321-5008-00			RES,FXD:METAL FILM;150 OHM,1%,0.125W,TC=100 PPM;1206,T&R	80009	321-5008-00
A24A2R352	321-5047-00			RES,FXD:METAL FILM;100K OHM,1%,0.125W,TC=100 PPM;1206,T&R	80009	321-5047-00
A24A2R353	321-5047-00			RES,FXD:METAL FILM;100K OHM,1%,0.125W,TC=100 PPM;1206,T&R	80009	321-5047-00
A24A2R354	321-5047-00			RES,FXD:METAL FILM;100K OHM,1%,0.125W,TC=100 PPM;1206,T&R	80009	321-5047-00
A24A2R360	321-5018-00			RES,FXD:METAL FILM;1.0K OHM,1%,0.125W,TC=100 PPM;1206,T&R	80009	321-5018-00
A24A2R361	321-5018-00			RES,FXD:METAL FILM;1.0K OHM,1%,0.125W,TC=100 PPM;1206,T&R	80009	321-5018-00
A24A2R370	321-5008-00			RES,FXD:METAL FILM;150 OHM,1%,0.125W,TC=100 PPM;1206,T&R	80009	321-5008-00
A24A2R390	321-5043-00			RES,FXD:METAL FILM;47.5 OHM,1%,0.125W,TC=100 PPM;1206,T&R	80009	321-5043-00
A24A2R391	321-5043-00			RES,FXD:METAL FILM;47.5 OHM,1%,0.125W,TC=100 PPM;1206,T&R	80009	321-5043-00
A24A2R400	321-5012-00			RES,FXD:METAL FILM;332 OHM,1%,0.125W,TC=100 PPM;1206,T&R	80009	321-5012-00
A24A2R401	321-5043-00			RES,FXD:METAL FILM;47.5 OHM,1%,0.125W,TC=100 PPM;1206,T&R	80009	321-5043-00
A24A2R402	321-5018-00			RES,FXD:METAL FILM;1.0K OHM,1%,0.125W,TC=100 PPM;1206,T&R	80009	321-5018-00
A24A2R403	321-5017-00			RES,FXD:METAL FILM;825 OHM,1%,0.125W,TC=100 PPM;1206,T&R	80009	321-5017-00
A24A2R410	321-5012-00			RES,FXD:METAL FILM;332 OHM,1%,0.125W,TC=100 PPM;1206,T&R	80009	321-5012-00
A24A2R411	321-5018-00			RES,FXD:METAL FILM;1.0K OHM,1%,0.125W,TC=100 PPM;1206,T&R	80009	321-5018-00
A24A2R412	321-5047-00			RES,FXD:METAL FILM;100K OHM,1%,0.125W,TC=100 PPM;1206,T&R	80009	321-5047-00
A24A2R413	321-5014-00			RES,FXD:METAL FILM;475 OHM,1%,0.125W,TC=100 PPM;1206,T&R	80009	321-5014-00

Component No.	Tektronix Part No.	Serial/Assembly No. Effective	Dscont	Name & Description	Mfr. Code	Mfr. Part No.
A24A2R414	321-5020-00			RES,FXD:METAL FILM;1.5K OHM,1%,0.125W,TC=100 PPM;1206,T&R	80009	321-5020-00
A24A2R415	321-5047-00			RES,FXD:METAL FILM;100K OHM,1%,0.125W,TC=100 PPM;1206,T&R	80009	321-5047-00
A24A2R416	321-5043-00			RES,FXD:METAL FILM;47.5 OHM,1%,0.125W,TC=100 PPM;1206,T&R	80009	321-5043-00
A24A2R417	321-5014-00			RES,FXD:METAL FILM;475 OHM,1%,0.125W,TC=100 PPM;1206,T&R	80009	321-5014-00
A24A2R418	321-5010-00			RES,FXD:METAL FILM;221 OHM,1%,0.125W,TC=100 PPM;1206,T&R	80009	321-5010-00
A24A2R420	321-5043-00			RES,FXD:METAL FILM;47.5 OHM,1%,0.125W,TC=100 PPM;1206,T&R	80009	321-5043-00
A24A2R421	321-5011-00			RES,FXD:METAL FILM;274 OHM,1%,0.125W,TC=100 PPM;1206,T&R	80009	321-5011-00
A24A2R422	321-5043-00			RES,FXD:METAL FILM;47.5 OHM,1%,0.125W,TC=100 PPM;1206,T&R	80009	321-5043-00
A24A2R430	321-5018-00			RES,FXD:METAL FILM;1.0K OHM,1%,0.125W,TC=100 PPM;1206,T&R	80009	321-5018-00
A24A2R431	321-5025-00			RES,FXD:METAL FILM;3.92K OHM,1%,0.125W,TC=100 PPM;1206,T&R	80009	321-5025-00
A24A2R432	321-5018-00			RES,FXD:METAL FILM;1.0K OHM,1%,0.125W,TC=100 PPM;1206,T&R	80009	321-5018-00
A24A2R433	321-5018-00			RES,FXD:METAL FILM;1.0K OHM,1%,0.125W,TC=100 PPM;1206,T&R	80009	321-5018-00
A24A2R434	321-5030-00			RES,FXD:METAL FILM;10.0K OHM,1%,0.125W,TC=100 PPM;1206,T&R	80009	321-5030-00
A24A2R435	321-5030-00			RES,FXD:METAL FILM;10.0K OHM,1%,0.125W,TC=100 PPM;1206,T&R	80009	321-5030-00
A24A2R440	321-5039-00			RES,FXD:METAL FILM;56.2K OHM,1%,0.125W,TC=100 PPM;1206,T&R	80009	321-5039-00
A24A2R441	321-5047-00			RES,FXD:METAL FILM;100K OHM,1%,0.125W,TC=100 PPM;1206,T&R	80009	321-5047-00
A24A2R442	321-5047-00			RES,FXD:METAL FILM;100K OHM,1%,0.125W,TC=100 PPM;1206,T&R	80009	321-5047-00
A24A2R450	321-5040-00			RES,FXD:METAL FILM;68.1K OHM,1%,0.125W,TC=100 PPM;1206,T&R	80009	321-5040-00
A24A2R451	321-5050-00			RES,FXD:METAL FILM;33.2 OHM,1%,0.125W,TC=100 PPM;1206,T&R	57668	MCR18FWEA33E2
A24A2R452	321-5030-00			RES,FXD:METAL FILM;10.0K OHM,1%,0.125W,TC=100 PPM;1206,T&R	80009	321-5030-00
A24A2R453	321-5031-00			RES,FXD:METAL FILM;12.1K OHM,1%,0.125W,TC=100 PPM;1206,T&R	80009	321-5031-00
A24A2R510	321-5047-00			RES,FXD:METAL FILM;100K OHM,1%,0.125W,TC=100 PPM;1206,T&R	80009	321-5047-00
A24A2R530	321-5026-00			RES,FXD:METAL FILM;4.75K OHM,1%,0.125W,TC=100 PPM;1206,T&R	80009	321-5026-00
A24A2R531	321-5026-00			RES,FXD:METAL FILM;4.75K OHM,1%,0.125W,TC=100 PPM;1206,T&R	80009	321-5026-00
A24A2R532	321-5025-00			RES,FXD:METAL FILM;3.92K OHM,1%,0.125W,TC=100 PPM;1206,T&R	80009	321-5025-00
A24A2R533	321-5030-00			RES,FXD:METAL FILM;10.0K OHM,1%,0.125W,TC=100 PPM;1206,T&R	80009	321-5030-00
A24A2R534	321-5030-00			RES,FXD:METAL FILM;10.0K OHM,1%,0.125W,TC=100 PPM;1206,T&R	80009	321-5030-00
A24A2R540	321-5043-00			RES,FXD:METAL FILM;47.5 OHM,1%,0.125W,TC=100 PPM;1206,T&R	80009	321-5043-00
A24A2R550	321-5026-00			RES,FXD:METAL FILM;4.75K OHM,1%,0.125W,TC=100 PPM;1206,T&R	80009	321-5026-00

Component No.	Tektronix Part No.	Serial/Assembly No. Effective	Dscont	Name & Description	Mfr. Code	Mfr. Part No.
A24A2R551	321-5018-00			RES,FXD:METAL FILM;1.0K OHM,1%,0.125W,TC=10 0 PPM;1206,T&R	80009	321-5018-00
A24A2R552	321-5018-00			RES,FXD:METAL FILM;1.0K OHM,1%,0.125W,TC=10 0 PPM;1206,T&R	80009	321-5018-00
A24A2R650	321-5043-00			RES,FXD:METAL FILM;47.5 OHM,1%,0.125W,TC=10 0 PPM;1206,T&R	80009	321-5043-00
A24A2R651	321-5043-00			RES,FXD:METAL FILM;47.5 OHM,1%,0.125W,TC=10 0 PPM;1206,T&R	80009	321-5043-00
A24A2R652	321-5015-00			RES,FXD:METAL FILM;562 OHM,1%,0.125W,TC=100 PPM;1206,T&R	80009	321-5015-00
A24A2R653	321-5014-00			RES,FXD:METAL FILM;475 OHM,1%,0.125W,TC=100 PPM;1206,T&R	80009	321-5014-00
A24A2R690	321-5012-00			RES,FXD:METAL FILM;332 OHM,1%,0.125W,TC=100 PPM;1206,T&R	80009	321-5012-00
A24A2R691	321-5002-00			RES,FXD:METAL FILM;15 OHM,1%,0.125W,TC=100 PPM;1206,T&R	57668	MCR18EZHFW 15E0
A24A2R692	321-5012-00			RES,FXD:METAL FILM;332 OHM,1%,0.125W,TC=100 PPM;1206,T&R	80009	321-5012-00
A24A2U230	156-5838-00			IC,DIGITAL:BIPOLAR,PRESCALER;DIVIDE BY 4,2. 5GHZ;UPB585G,SO8M-1,TUBE	80009	156-5838-00
A24A2U300	156-5221-00			IC,DIGITAL:ECL,FLIP FLOP;DUAL D-TYPE;10H131 ,PLCC20,TUBE	80009	156-5221-00
A24A2U320	119-5001-00			MIXER,RING:+7DBM LO,SMD	80009	119-5001-00
A24A2U340	156-5095-01			IC,LINEAR:BIPOLAR,OP-AMP;LOW NOISE,HIGH OUT PUT DRIVE;NE5534D,SO8.150,12MM T&R	80009	156-5095-01
A24A2U450	156-5018-00			IC,LINEAR:BIPOLAR,OP-AMP;DUAL,SINGLE SUPPLY ;LM358D,SO8.150,TUBE	80009	156-5018-00
A24A2U530	156-5018-00			IC,LINEAR:BIPOLAR,OP-AMP;DUAL,SINGLE SUPPLY ;LM358D,SO8.150,TUBE	80009	156-5018-00
A24A2U540	156-5018-00			IC,LINEAR:BIPOLAR,OP-AMP;DUAL,SINGLE SUPPLY ;LM358D,SO8.150,TUBE	80009	156-5018-00
A24A2X110	174-2082-00			CABLE,RESONATOR:0.141 SEMIRIGID COAX,50 OHM ,0.950 L X 0.125 STRIP	80009	174-2082-00
A24A2Y520	158-0383-00			XTAL UNIT,QTZ:105.4953 MHZ, +/- 0.0005%, 5T H OVERTONE AT CUT, SERIESHC-43/U PKG	59492	150-21290
A24A3	671-1543-00		B010472	CIRCUIT BD ASSY:TG ISOLATION AMP BOARD	80009	671-1543-00
A24A3	671-1543-01	B010473	B023743	CIRCUIT BD ASSY:TG ISOLATION AMP BOARD	80009	671-1543-01
A24A3	671-1543-02	B023744		CIRCUIT BD ASSY:TG ISOLATION AMP BOARD	80009	671-1543-02
A24A3C100	283-5012-00			CAP,FXD,CERAMIC:MLC;1PF,+/-0.25PF,100V		
A24A3C110	283-5005-00			CAP,FXD,CER DI:4PF,+/- 0.25PF,50V	54583	C3216COG1H040C
A24A3C111	283-5005-00			CAP,FXD,CER DI:4PF,+/- 0.25PF,50V	54583	C3216COG1H040C
A24A3C130	283-5012-00			CAP,FXD,CER DI:1PF,+/- 0.25PF,100V,0805 PKG ,SMD,TAPE & REEL.	80009	283-5012-00
A24A3C140	283-5005-00			CAP,FXD,CER DI:4PF,+/- 0.25PF,50V	54583	C3216COG1H040C
A24A3C141	283-5005-00			CAP,FXD,CER DI:4PF,+/- 0.25PF,50V	54583	C3216COG1H040C
A24A3C150	283-5005-00			CAP,FXD,CER DI:4PF,+/- 0.25PF,50V	54583	C3216COG1H040C
A24A3C200	283-5005-00			CAP,FXD,CER DI:4PF,+/- 0.25PF,50V	54583	C3216COG1H040C
A24A3C201	283-5005-00			CAP,FXD,CER DI:4PF,+/- 0.25PF,50V	54583	C3216COG1H040C
A24A3C210	283-5005-00			CAP,FXD,CER DI:4PF,+/- 0.25PF,50V	54583	C3216COG1H040C
A24A3C220	290-5002-00			CAP,FXD,ELCTLT:10UF,20V	TK1424	20MC100M-TER
A24A3C221	283-5005-00			CAP,FXD,CER DI:4PF,+/- 0.25PF,50V	54583	C3216COG1H040C
A24A3C230	283-5005-00			CAP,FXD,CER DI:4PF,+/- 0.25PF,50V	54583	C3216COG1H040C
A24A3C231	283-5001-00			CAP,FXD,CER DI:100PF,5%,50V	80009	283-5001-00
A24A3C232	283-5005-00			CAP,FXD,CER DI:4PF,+/- 0.25PF,50V	54583	C3216COG1H040C
A24A3C240	283-5005-00			CAP,FXD,CER DI:4PF,+/- 0.25PF,50V	54583	C3216COG1H040C
A24A3C241	283-5005-00			CAP,FXD,CER DI:4PF,+/- 0.25PF,50V	54583	C3216COG1H040C
A24A3C242	283-5005-00			CAP,FXD,CER DI:4PF,+/- 0.25PF,50V	54583	C3216COG1H040C
A24A3C300	290-5002-00			CAP,FXD,ELCTLT:10UF,20V	TK1424	20MC100M-TER
A24A3C301	283-5005-00			CAP,FXD,CER DI:4PF,+/- 0.25PF,50V	54583	C3216COG1H040C
A24A3C310	283-5004-00			CAP,FXD,CER DI:0.1UF,10%,25V	80009	283-5004-00

Component No.	Tektronix Part No.	Serial/Assembly No. Effective	Dscont	Name & Description	Mfr. Code	Mfr. Part No.
A24A3C311	283-5004-00			CAP,FXD,CER DI:0.1UF,10%,25V	80009	283-5004-00
A24A3C320	283-5003-00			CAP,FXD,CER DI:0.01UF,10%,50V	80009	283-5003-00
A24A3C340	283-5005-00			CAP,FXD,CER DI:4PF,+/- 0.25PF,50V	54583	C3216C0G1H040C
A24A3C341	283-5004-00			CAP,FXD,CER DI:0.1UF,10%,25V	80009	283-5004-00
A24A3C342	283-5005-00			CAP,FXD,CER DI:4PF,+/- 0.25PF,50V	54583	C3216C0G1H040C
A24A3C350	283-5005-00			CAP,FXD,CER DI:4PF,+/- 0.25PF,50V	54583	C3216C0G1H040C
A24A3C410	283-5004-00			CAP,FXD,CER DI:0.1UF,10%,25V	80009	283-5004-00
A24A3C440	290-5002-00			CAP,FXD,ELCTLT:10UF,20V	TK1424	20MC100M-TER
A24A3C510	283-5004-00			CAP,FXD,CER DI:0.1UF,10%,25V	80009	283-5004-00
A24A3C511	283-5001-00			CAP,FXD,CER DI:100PF,5%,50V	80009	283-5001-00
A24A3C512	283-5001-00			CAP,FXD,CER DI:100PF,5%,50V	80009	283-5001-00
A24A3C513	283-5001-00			CAP,FXD,CER DI:100PF,5%,50V	80009	283-5001-00
A24A3C520	283-5004-00			CAP,FXD,CER DI:0.1UF,10%,25V	80009	283-5004-00
A24A3CR130	152-5066-00			DIODE,SIG:,PIN;100V,0.35PF,1.0K OHMS,800NS; HSMP-3800,SOT-23,TR	80009	152-5066-00
A24A3CR131	152-5066-00			DIODE,SIG:,PIN;100V,0.35PF,1.0K OHMS,800NS; HSMP-3800,SOT-23,TR	80009	152-5066-00
A24A3CR410	152-5004-00			DIODE,SIG:,ULTRA FAST;70V,0.15A,6NS,SER-PAI R;BAV99,SOT-23,8MM TR	25088	BAV99T
A24A3CR510	152-0962-00			SEMICOND DVC,DI:SCHOTTKY,SI,CER STRIPLINE C ASE	80009	152-0962-00
A24A3CR530	152-5011-00			DIODE,SIG:,;6.2V,5%,225MW;MMBZ5234BL,SOT-23 ,8MM TR	80009	152-5011-00
A24A3CR600	152-1063-00			SEMICOND DVC,DI:SCHOTTKY,SI,STAR QUAD,450MV	80009	152-1063-00
A24A3J100	131-4203-00			CONN,RF JACK:	80009	131-4203-00
A24A3J110	131-4203-00			CONN,RF JACK:	80009	131-4203-00
A24A3J500	131-1857-00			CONN,HDR:PCB,;MALE,STR,1 X 36,0.1 CTR,0.230 MLG X 0.100 TAIL,GOLD;,,	58050	082-3644-SS10
A24A3L130	108-5013-00			COIL,RF:	80009	108-5013-00
A24A3L150	108-5013-00			COIL,RF:	80009	108-5013-00
A24A3L210	108-5013-00			COIL,RF:	80009	108-5013-00
A24A3L230	108-5013-00			COIL,RF:	80009	108-5013-00
A24A3Q110	151-0608-00			TRANSISTOR,SIG:BIPOLAR,NPN;12V,65MA,8.5GHZ, AMPLIFIER;NE64535/2SC2585,4 PIN CERAMIC X P KG	80009	151-0608-00
A24A3Q130	151-0608-00			TRANSISTOR,SIG:BIPOLAR,NPN;12V,65MA,8.5GHZ, AMPLIFIER;NE64535/2SC2585,4 PIN CERAMIC X P KG	80009	151-0608-00
A24A3Q220	151-5000-00			TRANSISTOR,SIG:BIPOLAR,PNP;40V,200MA,250MHZ ,AMPLIFIER;MMBT3906L,TO-236/SOT-23,8MM T&R	04713	MMBT3906LT1
A24A3Q250	151-1221-00			TRANSISTOR,SIG:MESFET,N-CH;GAAS,20MS,3DB@4G HZ;NE72084	80009	151-1221-00
A24A3Q300	151-5000-00			TRANSISTOR,SIG:BIPOLAR,PNP;40V,200MA,250MHZ ,AMPLIFIER;MMBT3906L,TO-236/SOT-23,8MM T&R	04713	MMBT3906LT1
A24A3Q340	151-5000-00			TRANSISTOR,SIG:BIPOLAR,PNP;40V,200MA,250MHZ ,AMPLIFIER;MMBT3906L,TO-236/SOT-23,8MM T&R	04713	MMBT3906LT1
A24A3Q440	151-5000-00			TRANSISTOR,SIG:BIPOLAR,PNP;40V,200MA,250MHZ ,AMPLIFIER;MMBT3906L,TO-236/SOT-23,8MM T&R	04713	MMBT3906LT1
A24A3R100	321-5014-00			RES,FXD:METAL FILM;475 OHM,1%,0.125W,TC=100 PPM;1206,T&R	80009	321-5014-00
A24A3R101	321-5000-00			RES,FXD:METAL FILM;10 OHM,1%,0.125W,TC=100 PPM;1206,T&R	57668	MCR18EZHFW10E
A24A3R102	321-5014-00			RES,FXD:METAL FILM;475 OHM,1%,0.125W,TC=100 PPM;1206,T&R	80009	321-5014-00
A24A3R120	321-5006-00			RES,FXD:METAL FILM;100 OHM,1%,0.125W,TC=100 PPM;1206,T&R	80009	321-5006-00
A24A3R121	321-5012-00			RES,FXD:METAL FILM;332 OHM,1%,0.125W,TC=100 PPM;1206,T&R	80009	321-5012-00

Component No.	Tektronix Part No.	Serial/Assembly No. Effective	Dscont	Name & Description	Mfr. Code	Mfr. Part No.
A24A3R122	321-5002-00			RES,FXD:METAL FILM;15 OHM,1%,0.125W,TC=100 PPM;1206,T&R	57668	MCR18EZHFW 15E0
A24A3R130	321-5012-00			RES,FXD:METAL FILM;332 OHM,1%,0.125W,TC=100 PPM;1206,T&R	80009	321-5012-00
A24A3R140	321-5043-00			RES,FXD:METAL FILM;47.5 OHM,1%,0.125W,TC=10 0 PPM;1206,T&R	80009	321-5043-00
A24A3R141	321-5043-00			RES,FXD:METAL FILM;47.5 OHM,1%,0.125W,TC=10 0 PPM;1206,T&R	80009	321-5043-00
A24A3R200	321-5018-00			RES,FXD:METAL FILM;1.0K OHM,1%,0.125W,TC=10 0 PPM;1206,T&R	80009	321-5018-00
A24A3R210	321-5004-00			RES,FXD:METAL FILM;22.1 OHM,1%,0.125W,TC=10 0 PPM;1206,T&R	80009	321-5004-00
A24A3R220	321-5036-00			RES,FXD:METAL FILM;33.2K OHM,1%,0.125W,TC=1 00 PPM;1206,T&R	80009	321-5036-00
A24A3R221	321-5025-00			RES,FXD:METAL FILM;3.92K OHM,1%,0.125W,TC=1 00 PPM;1206,T&R	80009	321-5025-00
A24A3R230	321-5018-00			RES,FXD:METAL FILM;1.0K OHM,1%,0.125W,TC=10 0 PPM;1206,T&R	80009	321-5018-00
A24A3R231	321-5001-00			RES,FXD:METAL FILM;12.1 OHM,1%,0.125W,TC=10 0 PPM;1206,T&R	57668	MCR18EZHFW 12E1
A24A3R250	321-5010-00			RES,FXD:METAL FILM;221 OHM,1%,0.125W,TC=100 PPM;1206,T&R	80009	321-5010-00
A24A3R251	321-5010-00			RES,FXD:METAL FILM;221 OHM,1%,0.125W,TC=100 PPM;1206,T&R	80009	321-5010-00
A24A3R310	321-5036-00			RES,FXD:METAL FILM;33.2K OHM,1%,0.125W,TC=1 00 PPM;1206,T&R	80009	321-5036-00
A24A3R311	321-5025-00			RES,FXD:METAL FILM;3.92K OHM,1%,0.125W,TC=1 00 PPM;1206,T&R	80009	321-5025-00
A24A3R312	321-5001-00			RES,FXD:METAL FILM;12.1 OHM,1%,0.125W,TC=10 0 PPM;1206,T&R	57668	MCR18EZHFW 12E1
A24A3R313	321-5004-00			RES,FXD:METAL FILM;22.1 OHM,1%,0.125W,TC=10 0 PPM;1206,T&R	80009	321-5004-00
A24A3R314	321-5018-00			RES,FXD:METAL FILM;1.0K OHM,1%,0.125W,TC=10 0 PPM;1206,T&R	80009	321-5018-00
A24A3R315	321-5018-00			RES,FXD:METAL FILM;1.0K OHM,1%,0.125W,TC=10 0 PPM;1206,T&R	80009	321-5018-00
A24A3R316	321-5000-00			RES,FXD:METAL FILM;10 OHM,1%,0.125W,TC=100 PPM;1206,T&R	57668	MCR18EZHFW10E
A24A3R320	321-5048-00			RES,FXD:METAL FILM;332K OHM,1%,0.125W,TC=10 0 PPM;1206,T&R	80009	321-5048-00
A24A3R340	321-5010-00			RES,FXD:METAL FILM;221 OHM,1%,0.125W,TC=100 PPM;1206,T&R	80009	321-5010-00
A24A3R341	321-5030-00			RES,FXD:METAL FILM;10.0K OHM,1%,0.125W,TC=1 00 PPM;1206,T&R	80009	321-5030-00
A24A3R342	321-5044-00			RES,FXD:METAL FILM;56.2 OHM,1%,0.125W,TC=10 0 PPM;1206,T&R	01121	BCD56R2FT
A24A3R343	321-5046-00			RES,FXD:METAL FILM;82.5 OHM,1%,0.125W,TC=10 0 PPM;1206,T&R	80009	321-5046-00
A24A3R344	321-5006-00			RES,FXD:METAL FILM;100 OHM,1%,0.125W,TC=100 PPM;1206,T&R	80009	321-5006-00
A24A3R345	321-5038-00			RES,FXD:METAL FILM;47.5K OHM,1%,0.125W,TC=1 00 PPM;1206,T&R	80009	321-5038-00
A24A3R410	321-5030-00			RES,FXD:METAL FILM;10.0K OHM,1%,0.125W,TC=1 00 PPM;1206,T&R	80009	321-5030-00
A24A3R411	321-5000-00			RES,FXD:METAL FILM;10 OHM,1%,0.125W,TC=100 PPM;1206,T&R	57668	MCR18EZHFW10E
A24A3R412	321-5030-00			RES,FXD:METAL FILM;10.0K OHM,1%,0.125W,TC=1 00 PPM;1206,T&R	80009	321-5030-00

Component No.	Tektronix Part No.	Serial/Assembly No. Effective	Dscont	Name & Description	Mfr. Code	Mfr. Part No.
A24A3R420	321-5013-00			RES,FXD:METAL FILM;392 OHM,1%,0.125W,TC=100 PPM;1206,T&R	80009	321-5013-00
A24A3R421	311-5037-00			RES,VAR,TRMR:CERMET;100 OHM,25%,0.25W,4MM SQ,TOP ADJ;SMD,T&R	TK2073	G4DT101E
A24A3R440	321-5036-00			RES,FXD:METAL FILM;33.2K OHM,1%,0.125W,TC=100 PPM;1206,T&R	80009	321-5036-00
A24A3R500	321-5043-00			RES,FXD:METAL FILM;47.5 OHM,1%,0.125W,TC=100 PPM;1206,T&R	80009	321-5043-00
A24A3R510	321-5036-00			RES,FXD:METAL FILM;33.2K OHM,1%,0.125W,TC=100 PPM;1206,T&R	80009	321-5036-00
A24A3R511	321-5006-00			RES,FXD:METAL FILM;100 OHM,1%,0.125W,TC=100 PPM;1206,T&R	80009	321-5006-00
A24A3R512	321-5043-00			RES,FXD:METAL FILM;47.5 OHM,1%,0.125W,TC=100 PPM;1206,T&R	80009	321-5043-00
A24A3R520	321-5020-00			RES,FXD:METAL FILM;1.5K OHM,1%,0.125W,TC=100 PPM;1206,T&R	80009	321-5020-00
A24A3R521	321-5008-00			RES,FXD:METAL FILM;150 OHM,1%,0.125W,TC=100 PPM;1206,T&R	80009	321-5008-00
A24A3R530	321-5011-00			RES,FXD:METAL FILM;274 OHM,1%,0.125W,TC=100 PPM;1206,T&R	80009	321-5011-00
A24A3R600	321-5002-00			RES,FXD:METAL FILM;15 OHM,1%,0.125W,TC=100 PPM;1206,T&R	57668	MCR18EZHFW 15E0
A24A3	671-1543-02	B021134		CIRCUIT BD ASSY:TG ISOLATION AMP BOARD	80005	671-1543-02
A24A3R601	321-5012-00			RES,FXD:METAL FILM;332 OHM,1%,0.125W,TC=100 PPM;1206,T&R	80009	321-5012-00
A24A3R602	321-5012-00			RES,FXD:METAL FILM;332 OHM,1%,0.125W,TC=100 PPM;1206,T&R	80009	321-5012-00
A24A3U310	156-5017-01			IC,LINEAR:BIPOLAR,OP-AMP;DUAL;MC1458D,SO8.150,12MM T/R	80009	156-5017-01
A24A4	671-1541-00			CIRCUIT BD ASSY:TG RF AMPLIFIER	80009	671-1541-00
A24A4C101	283-5004-00			CAP,FXD,CER DI:0.1UF,10%,25V	80009	283-5004-00
A24A4C102	283-5010-00			CAP,FXD,CER DI:0.22UF,10%,25V	80009	283-5010-00
A24A4C112	283-5004-00			CAP,FXD,CER DI:0.1UF,10%,25V	80009	283-5004-00
A24A4C121	283-5004-00			CAP,FXD,CER DI:0.1UF,10%,25V	80009	283-5004-00
A24A4C130	283-5004-00			CAP,FXD,CER DI:0.1UF,10%,25V	80009	283-5004-00
A24A4C140	283-5004-00			CAP,FXD,CER DI:0.1UF,10%,25V	80009	283-5004-00
A24A4C150	283-5004-00			CAP,FXD,CER DI:0.1UF,10%,25V	80009	283-5004-00
A24A4C200	290-5002-00			CAP,FXD,ELCTLT:10UF,20V	TK1424	20MC100M-TER
A24A4C300	283-5010-00			CAP,FXD,CER DI:0.22UF,10%,25V	80009	283-5010-00
A24A4C310	283-5010-00			CAP,FXD,CER DI:0.22UF,10%,25V	80009	283-5010-00
A24A4C330	283-5004-00			CAP,FXD,CER DI:0.1UF,10%,25V	80009	283-5004-00
A24A4C340	283-5112-00			CAP,FXD,CER DI:0.33UF,10%,25V	80009	283-5112-00
A24A4C350	283-5017-00			CAP,FXD,CER DI:1PF,+/-0.25PF,50V	80009	283-5017-00
A24A4C360	283-5010-00			CAP,FXD,CER DI:0.22UF,10%,25V	80009	283-5010-00
A24A4C410	283-5010-00			CAP,FXD,CER DI:0.22UF,10%,25V	80009	283-5010-00
A24A4C411	283-5010-00			CAP,FXD,CER DI:0.22UF,10%,25V	80009	283-5010-00
A24A4C420	283-5010-00			CAP,FXD,CER DI:0.22UF,10%,25V	80009	283-5010-00
A24A4C421	283-5004-00			CAP,FXD,CER DI:0.1UF,10%,25V	80009	283-5004-00
A24A4C430	283-5010-00			CAP,FXD,CER DI:0.22UF,10%,25V	80009	283-5010-00
A24A4C431	290-5002-00			CAP,FXD,ELCTLT:10UF,20V	TK1424	20MC100M-TER
A24A4C510	283-5010-00			CAP,FXD,CER DI:0.22UF,10%,25V	80009	283-5010-00
A24A4C521	283-5000-00			CAP,FXD,CER DI:10PF,5%,50V	80009	283-5000-00
A24A4C540	283-5010-00			CAP,FXD,CER DI:0.22UF,10%,25V	80009	283-5010-00
A24A4C541	283-5010-00			CAP,FXD,CER DI:0.22UF,10%,25V	80009	283-5010-00
A24A4CR340	152-5001-00			DIODE,SIG:SCHTKY,;50V,1.5PF,0.6VF;MMBD701L,SOT-23,8MM TR	80009	152-5001-00
A24A4CR360	152-0962-00			SEMICOND DVC,DI:SCHOTTKY,SI,CER STRIPLINE CASE	80009	152-0962-00
A24A4J600	131-4203-00			CONN,RF JACK:	80009	131-4203-00

Component No.	Tektronix Part No.	Serial/Assembly No. Effective	Dscont	Name & Description	Mfr. Code	Mfr. Part No.
A24A4K600	148-0198-00			RELAY,ARMATURE:2 FORM C,COIL 6VDC, 98 OHM,C ONTACT 1A@28 VDC,PKG TO-5	11532	712-6
A24A4K610	148-0198-00			RELAY,ARMATURE:2 FORM C,COIL 6VDC, 98 OHM,C ONTACT 1A@28 VDC,PKG TO-5	11532	712-6
A24A4K620	148-0198-00			RELAY,ARMATURE:2 FORM C,COIL 6VDC, 98 OHM,C ONTACT 1A@28 VDC,PKG TO-5	11532	712-6
A24A4K630	148-0198-00			RELAY,ARMATURE:2 FORM C,COIL 6VDC, 98 OHM,C ONTACT 1A@28 VDC,PKG TO-5	11532	712-6
A24A4L410	108-5001-00			COIL,RF:FXD,70NH,+/-5%,Q=35,SRF 900MHZ, DCR 0.55 OHM, I MAX	80009	108-5001-00
A24A4L411	108-5001-00			COIL,RF:FXD,70NH,+/-5%,Q=35,SRF 900MHZ, DCR 0.55 OHM, I MAX	80009	108-5001-00
A24A4L510	108-5001-00			COIL,RF:FXD,70NH,+/-5%,Q=35,SRF 900MHZ, DCR 0.55 OHM, I MAX	80009	108-5001-00
A24A4Q430	151-5000-00			TRANSISTOR,SIG:BIPOLAR,PNP;40V,200MA,250MHZ ,AMPLIFIER;MMBT3906L,TO-236/SOT-23,8MM T&R	04713	MMBT3906LT1
A24A4Q530	151-0608-00			TRANSISTOR,SIG:BIPOLAR,NPN;12V,65MA,8.5GHZ, AMPLIFIER;NE64535/2SC2585,4 PIN CERAMIC X P KG	80009	151-0608-00
A24A4R200	321-5008-00			RES,FXD:METAL FILM;150 OHM,1%,0.125W,TC=100 PPM;1206,T&R	80009	321-5008-00
A24A4R201	321-5045-00			RES,FXD:METAL FILM;68.1 OHM,1%,0.125W,TC=10 0 PPM;1206,T&R	80009	321-5045-00
A24A4R202	321-5045-00			RES,FXD:METAL FILM;68.1 OHM,1%,0.125W,TC=10 0 PPM;1206,T&R	80009	321-5045-00
A24A4R210	321-5004-00			RES,FXD:METAL FILM;22.1 OHM,1%,0.125W,TC=10 0 PPM;1206,T&R	80009	321-5004-00
A24A4R211	321-5010-00			RES,FXD:METAL FILM;221 OHM,1%,0.125W,TC=100 PPM;1206,T&R	80009	321-5010-00
A24A4R212	321-5010-00			RES,FXD:METAL FILM;221 OHM,1%,0.125W,TC=100 PPM;1206,T&R	80009	321-5010-00
A24A4R220	321-5044-00			RES,FXD:METAL FILM;56.2 OHM,1%,0.125W,TC=10 0 PPM;1206,T&R	01121	BCD56R2FT
A24A4R221	321-5007-00			RES,FXD:METAL FILM;121 OHM,1%,0.125W,TC=100 PPM;1206,T&R	80009	321-5007-00
A24A4R222	321-5007-00			RES,FXD:METAL FILM;121 OHM,1%,0.125W,TC=100 PPM;1206,T&R	80009	321-5007-00
A24A4R230	321-5010-00			RES,FXD:METAL FILM;221 OHM,1%,0.125W,TC=100 PPM;1206,T&R	80009	321-5010-00
A24A4R231	321-5044-00			RES,FXD:METAL FILM;56.2 OHM,1%,0.125W,TC=10 0 PPM;1206,T&R	01121	BCD56R2FT
A24A4R232	321-5044-00			RES,FXD:METAL FILM;56.2 OHM,1%,0.125W,TC=10 0 PPM;1206,T&R	01121	BCD56R2FT
A24A4R310	321-5000-00			RES,FXD:METAL FILM;10 OHM,1%,0.125W,TC=100 PPM;1206,T&R	57668	MCR18EZHFW10E
A24A4R311	321-5000-00			RES,FXD:METAL FILM;10 OHM,1%,0.125W,TC=100 PPM;1206,T&R	57668	MCR18EZHFW10E
A24A4R330	321-5047-00			RES,FXD:METAL FILM;100K OHM,1%,0.125W,TC=10 0 PPM;1206,T&R	80009	321-5047-00
A24A4R331	321-5006-00			RES,FXD:METAL FILM;100 OHM,1%,0.125W,TC=100 PPM;1206,T&R	80009	321-5006-00
A24A4R332	321-5024-00			RES,FXD:METAL FILM;3.32K OHM,1%,0.125W,TC=1 00 PPM;1206,T&R	80009	321-5024-00
A24A4R333	321-5026-00			RES,FXD:METAL FILM;4.75K OHM,1%,0.125W,TC=1 00 PPM;1206,T&R	80009	321-5026-00
A24A4R340	321-5024-00			RES,FXD:METAL FILM;3.32K OHM,1%,0.125W,TC=1 00 PPM;1206,T&R	80009	321-5024-00
A24A4R341	321-5047-00			RES,FXD:METAL FILM;100K OHM,1%,0.125W,TC=10 0 PPM;1206,T&R	80009	321-5047-00

Component No.	Tektronix Part No.	Serial/Assembly No. Effective	Dscont	Name & Description	Mfr. Code	Mfr. Part No.
A24A4R342	321-5034-00			RES,FXD:METAL FILM;22.1K OHM,1%,0.125W,TC=100 PPM;1206,T&R	80009	321-5034-00
A24A4R350	321-5006-00			RES,FXD:METAL FILM;100 OHM,1%,0.125W,TC=100 PPM;1206,T&R	80009	321-5006-00
A24A4R351	321-5018-00			RES,FXD:METAL FILM;1.0K OHM,1%,0.125W,TC=100 PPM;1206,T&R	80009	321-5018-00
A24A4R360	321-5046-00			RES,FXD:METAL FILM;82.5 OHM,1%,0.125W,TC=100 PPM;1206,T&R	80009	321-5046-00
A24A4R361	321-5044-00			RES,FXD:METAL FILM;56.2 OHM,1%,0.125W,TC=100 PPM;1206,T&R	01121	BCD56R2FT
A24A4R362	321-5005-00			RES,FXD:METAL FILM;27.4 OHM,1%,0.125W,TC=100 PPM;1206,T&R	80009	321-5005-00
A24A4R410	321-5007-00			RES,FXD:METAL FILM;121 OHM,1%,0.125W,TC=100 PPM;1206,T&R	80009	321-5007-00
A24A4R411	321-5007-00			RES,FXD:METAL FILM;121 OHM,1%,0.125W,TC=100 PPM;1206,T&R	80009	321-5007-00
A24A4R412	321-5007-00			RES,FXD:METAL FILM;121 OHM,1%,0.125W,TC=100 PPM;1206,T&R	80009	321-5007-00
A24A4R430	321-5025-00			RES,FXD:METAL FILM;3.92K OHM,1%,0.125W,TC=100 PPM;1206,T&R	80009	321-5025-00
A24A4R431	321-5020-00			RES,FXD:METAL FILM;1.5K OHM,1%,0.125W,TC=100 PPM;1206,T&R	80009	321-5020-00
A24A4R432	321-5011-00			RES,FXD:METAL FILM;274 OHM,1%,0.125W,TC=100 PPM;1206,T&R	80009	321-5011-00
A24A4R433	321-5030-00			RES,FXD:METAL FILM;10.0K OHM,1%,0.125W,TC=100 PPM;1206,T&R	80009	321-5030-00
A24A4R440	321-5002-00			RES,FXD:METAL FILM;15 OHM,1%,0.125W,TC=100 PPM;1206,T&R	57668	MCR18EZHFW 15E0
A24A4R441	321-5042-00			RES,FXD:METAL FILM;39.2 OHM,1%,0.125W,TC=100 PPM;1206,T&R	80009	321-5042-00
A24A4R520	321-5030-00			RES,FXD:METAL FILM;10.0K OHM,1%,0.125W,TC=100 PPM;1206,T&R	80009	321-5030-00
A24A4R522	321-5042-00			RES,FXD:METAL FILM;39.2 OHM,1%,0.125W,TC=100 PPM;1206,T&R	80009	321-5042-00
A24A4R530	321-5042-00			RES,FXD:METAL FILM;39.2 OHM,1%,0.125W,TC=100 PPM;1206,T&R	80009	321-5042-00
A24A4R531	321-5042-00			RES,FXD:METAL FILM;39.2 OHM,1%,0.125W,TC=100 PPM;1206,T&R	80009	321-5042-00
A24A4R532	321-5042-00			RES,FXD:METAL FILM;39.2 OHM,1%,0.125W,TC=100 PPM;1206,T&R	80009	321-5042-00
A24A4R533	321-5007-00			RES,FXD:METAL FILM;121 OHM,1%,0.125W,TC=100 PPM;1206,T&R	80009	321-5007-00
A24A4U300	156-2403-00			IC,LINEAR:BIPOLAR,AMPLIFIER;MICROWAVE,12DB GAIN,2.7GHZ;MSA-0335,4 PIN CERAMIC X PKG	80009	156-2403-00
A24A4U330	156-5017-01			IC,LINEAR:BIPOLAR,OP-AMP;DUAL;MC1458D,SO8.150,12MM T/R	80009	156-5017-01
A24A4U410	156-2403-00			IC,LINEAR:BIPOLAR,AMPLIFIER;MICROWAVE,12DB GAIN,2.7GHZ;MSA-0335,4 PIN CERAMIC X PKG	80009	156-2403-00
A24A4U510	156-2403-00			IC,LINEAR:BIPOLAR,AMPLIFIER;MICROWAVE,12DB GAIN,2.7GHZ;MSA-0335,4 PIN CERAMIC X PKG	80009	156-2403-00
A25	671-1859-01			CIRCUIT BD ASSY:GPIB	80009	671-1859-01
A25BT600	146-0044-00			BATTERY,DRY:3V,0.17AH @ 0.85MA,BUTTON CELL, LITHIUM-MANGANESE DIOXIDE	00681	ORDER BY DESCR
A25C110	283-5004-00			CAP,FXD,CER DI:0.1UF,10%,25V	80009	283-5004-00
A25C120	283-5004-00			CAP,FXD,CER DI:0.1UF,10%,25V	80009	283-5004-00
A25C170	283-5004-00			CAP,FXD,CER DI:0.1UF,10%,25V	80009	283-5004-00
A25C200	283-5004-00			CAP,FXD,CER DI:0.1UF,10%,25V	80009	283-5004-00
A25C220	283-5004-00			CAP,FXD,CER DI:0.1UF,10%,25V	80009	283-5004-00
A25C250	283-5004-00			CAP,FXD,CER DI:0.1UF,10%,25V	80009	283-5004-00

Component No.	Tektronix Part No.	Serial/Assembly No. Effective	Dscont	Name & Description	Mfr. Code	Mfr. Part No.
A25C270	283-5004-00			CAP,FXD,CER DI:0.1UF,10%,25V	80009	283-5004-00
A25C310	283-5004-00			CAP,FXD,CER DI:0.1UF,10%,25V	80009	283-5004-00
A25C320	283-5004-00			CAP,FXD,CER DI:0.1UF,10%,25V	80009	283-5004-00
A25C330	283-5004-00			CAP,FXD,CER DI:0.1UF,10%,25V	80009	283-5004-00
A25C340	283-5004-00			CAP,FXD,CER DI:0.1UF,10%,25V	80009	283-5004-00
A25C350	283-5004-00			CAP,FXD,CER DI:0.1UF,10%,25V	80009	283-5004-00
A25C360	283-5004-00			CAP,FXD,CER DI:0.1UF,10%,25V	80009	283-5004-00
A25C361	283-5004-00			CAP,FXD,CER DI:0.1UF,10%,25V	80009	283-5004-00
A25C370	283-5004-00			CAP,FXD,CER DI:0.1UF,10%,25V	80009	283-5004-00
A25C420	283-5004-00			CAP,FXD,CER DI:0.1UF,10%,25V	80009	283-5004-00
A25C430	283-5004-00			CAP,FXD,CER DI:0.1UF,10%,25V	80009	283-5004-00
A25C440	283-5004-00			CAP,FXD,CER DI:0.1UF,10%,25V	80009	283-5004-00
A25C450	283-5004-00			CAP,FXD,CER DI:0.1UF,10%,25V	80009	283-5004-00
A25C460	283-5004-00			CAP,FXD,CER DI:0.1UF,10%,25V	80009	283-5004-00
A25C513	283-5001-00			CAP,FXD,CER DI:100PF,5%,50V	80009	283-5001-00
A25C710	290-0944-00			CAP,FXD,ELCTLT:220UF,+50-20%,10V	55680	UVX1C221MPA
A25C860	290-0944-00			CAP,FXD,ELCTLT:220UF,+50-20%,10V	55680	UVX1C221MPA
A25C920	290-0944-00			CAP,FXD,ELCTLT:220UF,+50-20%,10V	55680	UVX1C221MPA
A25C990	290-0944-00			CAP,FXD,ELCTLT:220UF,+50-20%,10V	55680	UVX1C221MPA
A25CR110	152-0457-00			SEMICOND DVC,DI:SW,SI,25V,DO-35	28480	5082-2068
A25DS470	150-5000-00			DIODE,OPTO:,LED;RED,628NM;LS S260-DO,SOT-23 ,8MM,TR	80009	150-5000-00
A25DS471	150-5000-00			DIODE,OPTO:,LED;RED,628NM;LS S260-DO,SOT-23 ,8MM,TR	80009	150-5000-00
A25J150	131-2221-00			CONN,HDR:PCB;,MALE,RTANG,2 X 25,0.1 CTR,0.3 18 MLG X 0.110 TAIL,30 GOLD;,,	22526	65626-150
A25J340	131-1857-00			CONN,HDR:PCB,;MALE,STR,1 X 36,0.1 CTR,0.230 MLG X 0.100 TAIL,GOLD;,,	58050	082-3644-SS10
A25J500	131-1857-00			CONN,HDR:PCB,;MALE,STR,1 X 36,0.1 CTR,0.230 MLG X 0.100 TAIL,GOLD;,,	58050	082-3644-SS10
A25J501	131-1857-00			CONN,HDR:PCB,;MALE,STR,1 X 36,0.1 CTR,0.230 MLG X 0.100 TAIL,GOLD;,,	58050	082-3644-SS10
A25J510	131-1857-00			CONN,HDR:PCB,;MALE,STR,1 X 36,0.1 CTR,0.230 MLG X 0.100 TAIL,GOLD;,,	58050	082-3644-SS10
A25J511	131-1857-00			CONN,HDR:PCB,;MALE,STR,1 X 36,0.1 CTR,0.230 MLG X 0.100 TAIL,GOLD;,,	58050	082-3644-SS10
A25J550	131-2221-00			CONN,HDR:PCB;,MALE,RTANG,2 X 25,0.1 CTR,0.3 18 MLG X 0.110 TAIL,30 GOLD;,,	22526	65626-150
A25P8	131-3556-00			CONN,RCPT,ELEC:CARD CONN,2 X 12,HORIZ	22526	66527-012
A25P500	131-3199-00			BUS,CONDUCTOR:SHUNT,;FEMALE,1 X 2,0.1 CTR,0 .200 H,LOW PROFILE,JUMPER;,,	22526	76264-101
A25Q211	151-5001-00			TRANSISTOR,SIG:BIPOLAR,NPN;40V,200MA,300MHZ ,AMPLIFIER;MMBT3904L,TO-236/SOT-23,8MM T&R	80009	151-5001-00
A25Q470	151-5001-00			TRANSISTOR,SIG:BIPOLAR,NPN;40V,200MA,300MHZ ,AMPLIFIER;MMBT3904L,TO-236/SOT-23,8MM T&R	80009	151-5001-00
A25Q471	151-5001-00			TRANSISTOR,SIG:BIPOLAR,NPN;40V,200MA,300MHZ ,AMPLIFIER;MMBT3904L,TO-236/SOT-23,8MM T&R	80009	151-5001-00
A25Q510	151-5001-00			TRANSISTOR,SIG:BIPOLAR,NPN;40V,200MA,300MHZ ,AMPLIFIER;MMBT3904L,TO-236/SOT-23,8MM T&R	80009	151-5001-00
A25R211	321-5030-00			RES,FXD:METAL FILM;10.0K OHM,1%,0.125W,TC=1 00 PPM;1206,T&R	80009	321-5030-00
A25R212	321-5030-00			RES,FXD:METAL FILM;10.0K OHM,1%,0.125W,TC=1 00 PPM;1206,T&R	80009	321-5030-00
A25R270	321-5026-00			RES,FXD:METAL FILM;4.75K OHM,1%,0.125W,TC=1 00 PPM;1206,T&R	80009	321-5026-00
A25R300	321-5030-00			RES,FXD:METAL FILM;10.0K OHM,1%,0.125W,TC=1 00 PPM;1206,T&R	80009	321-5030-00
A25R340	321-5026-00			RES,FXD:METAL FILM;4.75K OHM,1%,0.125W,TC=1 00 PPM;1206,T&R	80009	321-5026-00

Component No.	Tektronix Part No.	Serial/Assembly No. Effective	Dscont	Name & Description	Mfr. Code	Mfr. Part No.
A25R360	321-5030-00			RES,FXD:METAL FILM;10.0K OHM,1%,0.125W,TC=100 PPM;1206,T&R	80009	321-5030-00
A25R361	321-5047-00			RES,FXD:METAL FILM;100K OHM,1%,0.125W,TC=100 PPM;1206,T&R	80009	321-5047-00
A25R362	321-5047-00			RES,FXD:METAL FILM;100K OHM,1%,0.125W,TC=100 PPM;1206,T&R	80009	321-5047-00
A25R363	321-5047-00			RES,FXD:METAL FILM;100K OHM,1%,0.125W,TC=100 PPM;1206,T&R	80009	321-5047-00
A25R450	321-5047-00			RES,FXD:METAL FILM;100K OHM,1%,0.125W,TC=100 PPM;1206,T&R	80009	321-5047-00
A25R451	321-5030-00			RES,FXD:METAL FILM;10.0K OHM,1%,0.125W,TC=100 PPM;1206,T&R	80009	321-5030-00
A25R452	321-5030-00			RES,FXD:METAL FILM;10.0K OHM,1%,0.125W,TC=100 PPM;1206,T&R	80009	321-5030-00
A25R453	321-5030-00			RES,FXD:METAL FILM;10.0K OHM,1%,0.125W,TC=100 PPM;1206,T&R	80009	321-5030-00
A25R470	321-5030-00			RES,FXD:METAL FILM;10.0K OHM,1%,0.125W,TC=100 PPM;1206,T&R	80009	321-5030-00
A25R471	321-5030-00			RES,FXD:METAL FILM;10.0K OHM,1%,0.125W,TC=100 PPM;1206,T&R	80009	321-5030-00
A25R472	321-5030-00			RES,FXD:METAL FILM;10.0K OHM,1%,0.125W,TC=100 PPM;1206,T&R	80009	321-5030-00
A25R473	321-5030-00			RES,FXD:METAL FILM;10.0K OHM,1%,0.125W,TC=100 PPM;1206,T&R	80009	321-5030-00
A25R510	321-5018-00			RES,FXD:METAL FILM;1.0K OHM,1%,0.125W,TC=100 PPM;1206,T&R	80009	321-5018-00
A25R511	321-5030-00			RES,FXD:METAL FILM;10.0K OHM,1%,0.125W,TC=100 PPM;1206,T&R	80009	321-5030-00
A25R512	321-5030-00			RES,FXD:METAL FILM;10.0K OHM,1%,0.125W,TC=100 PPM;1206,T&R	80009	321-5030-00
A25R514	321-5026-00			RES,FXD:METAL FILM;4.75K OHM,1%,0.125W,TC=100 PPM;1206,T&R	80009	321-5026-00
A25R570	321-5010-00			RES,FXD:METAL FILM;221 OHM,1%,0.125W,TC=100 PPM;1206,T&R	80009	321-5010-00
A25R571	321-5010-00			RES,FXD:METAL FILM;221 OHM,1%,0.125W,TC=100 PPM;1206,T&R	80009	321-5010-00
A25U110	156-2760-00			IC,DIGITAL:CMOS,MISC;NONVOLATILE CONTROLLER CHIP;DS1210,DIP8.3,TUBE	0B0A9	DS1210
A25U130	156-2463-00			IC,DIGITAL:HCMOS,GATE;QUAD 2-INPUT OR;74HC32,DIP14.3	18324	74HC32N
A25U170	156-1414-00			IC,DIGITAL:LSTTL,TRANSCEIVER;OCTAL IEEE-488 GPIB BUS XCVR;75160,DIP20.3	80009	156-1414-00
A25U200	156-3629-00			IC,PROCESSOR:CMOS,PERIPHERAL;RTC, CLOCK CALENDAR;62X42,DIP18.3	80009	156-3629-00
A25U210	156-5155-00			IC,DIGITAL:HCMOS,GATE;HEX INV;74HC04,SO14.150,TUBE	80009	156-5155-00
A25U220	156-5286-00			IC,MEMORY:CMOS,SRAM;32K X 8,120NS,50UA,OE;43256,SO28M.330,TUBE	80009	156-5286-00
A25U250	156-5101-01			IC,DIGITAL:HCTCMOS,LATCH;OCTAL D-TYPE, 3-STATE;74HCT373,SO20.300,24MM T&R	80009	156-5101-01
A25U270	156-6223-00			IC,PROCESSOR:NMOS,PERIPHERAL;GPIB CONTROLLER,TEXAS INSTR PINOUT;9914A,PLCC44,TUBE	80009	156-6223-00
A25U311	160-5433-00			MICROCKT,DGTL:STTL,PLD,FPLS,PRGM	80009	160-5433-00
A25U312	160-7548-00	B010100	B010628	IC,DIGITAL:CMOS,131072 X 8 EPROM;250NS,27C010,DIP32.6	80009	160-7548-00
A25U312	160-7548-01	B010629		IC,DIGITAL:CMOS,EPROM;131072 X 8,PRGM 156-3267-00,250NS,27C010,DIP32.6	80009	160-7548-01
A25U320	156-5286-00			IC,MEMORY:CMOS,SRAM;32K X 8,120NS,50UA,OE;43256,SO28M.330,TUBE	80009	156-5286-00

Component No.	Tektronix Part No.	Serial/Assembly No. Effective	Dscont	Name & Description	Mfr. Code	Mfr. Part No.
A25U330	160-5329-00			MICROCKT,DGTL:STTL.PLD,FPLA,PRGM	80009	160-5329-00
A25U340	160-5328-00			IC,DIGITAL:STTL.PLD;FPLA,PLS173,30NS,170MA, PRGM 156-5283-00;PLS173A,PLCC28-1	80009	160-5328-00
A25U350	156-5220-01			IC,DIGITAL:HCTCMOS,BUFFER;OCTAL BUFFER/DRIV ER, 3-STATE;74HCT541,SO20.300,24MM T&R	80009	156-5220-01
A25U360	156-5146-00			IC,DIGITAL:HCTCMOS,GATE;QUAD 2-INPUT AND;74 HCT08,SO14.150,TUBE	80009	156-5146-00
A25U361	156-5081-01			IC,DIGITAL:HCTMOS,GATE;HEX INVERTER;74HCT04 ,SO14.150,16MM T&R	80009	156-5081-01
A25U370	156-1459-00			IC,DIGITAL:LSTTL,TRANSCEIVER;OCTAL IEEE-488 GPIB BUS MGT;75162A, DIP22.4	80009	156-1459-00
A25U410	160-7547-00	B010100	B010628	IC,DIGITAL:CMOS,131072 X 8 EPROM;250NS,27C0 10,DIP32.6	80009	160-7547-00
A25U410	160-7547-01	B010629		IC,DIGITAL:CMOS,EPROM;131072 X 8,PRGM 156-3 267-00,250NS,27C010,DIP32.6	80009	160-7547-01
A25U420	156-5286-00			IC,MEMORY:CMOS,SRAM;32K X 8,120NS,50UA,OE;4 3256,SO28M.330,TUBE	80009	156-5286-00
A25U430	156-5220-01			IC,DIGITAL:HCTCMOS,BUFFER;OCTAL BUFFER/DRIV ER, 3-STATE;74HCT541,SO20.300,24MM T&R	80009	156-5220-01
A25U440	156-5220-01			IC,DIGITAL:HCTCMOS,BUFFER;OCTAL BUFFER/DRIV ER, 3-STATE;74HCT541,SO20.300,24MM T&R	80009	156-5220-01
A25U450	156-5071-00			IC,DIGITAL:HCTCMOS,TRANSCEIVER;OCTAL, 3-STA TE;74HCT245,SO20.300,TUBE	80009	156-5071-00
A25U460	156-5220-01			IC,DIGITAL:HCTCMOS,BUFFER;OCTAL BUFFER/DRIV ER, 3-STATE;74HCT541,SO20.300,24MM T&R	80009	156-5220-01
A25W501	321-5051-00			RES,FXD:METAL FILM;0 OHM,1%,0.125W,TC=100	80009	321-5051-00
A26	671-2013-05	B023248		CIRCUIT BD ASSY:RF OPTION 12	80009	671-2013-05
A26C100	283-5004-00			CAP,FXD,CER DI:0.1UF,10%,25V	80009	283-5004-00
A26C111	283-5004-00			CAP,FXD,CER DI:0.1UF,10%,25V	80009	283-5004-00
A26C120	281-0267-00			CAP,VAR,CERAMIC:6-50PF,50V	80009	281-0267-00
A26C142	283-5004-00			CAP,FXD,CER DI:0.1UF,10%,25V	80009	283-5004-00
A26C150	283-5004-00			CAP,FXD,CER DI:0.1UF,10%,25V	80009	283-5004-00
A26C180	283-5004-00			CAP,FXD,CER DI:0.1UF,10%,25V	80009	283-5004-00
A26C191	283-5004-00			CAP,FXD,CER DI:0.1UF,10%,25V	80009	283-5004-00
A26C205	283-5004-00			CAP,FXD,CER DI:0.1UF,10%,25V	80009	283-5004-00
A26C206	283-5004-00			CAP,FXD,CER DI:0.1UF,10%,25V	80009	283-5004-00
A26C207	283-5004-00			CAP,FXD,CER DI:0.1UF,10%,25V	80009	283-5004-00
A26C208	283-5011-00			CAP,FXD,CER DI:33PF,5%,50V	95275	VJ1206A330JXA
A26C209	283-5000-00			CAP,FXD,CER DI:10PF,5%,50V	80009	283-5000-00
A26C210	281-0267-00			CAP,VAR,CERAMIC:6-50PF,50V	80009	281-0267-00
A26C211	283-5004-00			CAP,FXD,CER DI:0.1UF,10%,25V	80009	283-5004-00
A26C220	283-5004-00			CAP,FXD,CER DI:0.1UF,10%,25V	80009	283-5004-00
A26C221	283-5004-00			CAP,FXD,CER DI:0.1UF,10%,25V	80009	283-5004-00
A26C222	283-5008-00			CAP,FXD,CER DI:12PF,5%,50V	54583	C3216C0G1H120J
A26C223	283-5022-00			CAP,FXD,CER DI:47PF,5%,50V	54583	
A26C230	283-5000-00			CAP,FXD,CER DI:10PF,5%,50V	80009	283-5000-00
A26C231	283-5001-00			CAP,FXD,CER DI:100PF,5%,50V	80009	283-5001-00
A26C232	283-5000-00			CAP,FXD,CER DI:10PF,5%,50V	80009	283-5000-00
A26C233	281-0267-00			CAP,VAR,CERAMIC:6-50PF,50V	80009	281-0267-00
A26C234	281-0267-00			CAP,VAR,CERAMIC:6-50PF,50V	80009	281-0267-00
A26C240	283-5022-00			CAP,FXD,CER DI:47PF,5%,50V	54583	
A26C241	283-5008-00			CAP,FXD,CER DI:12PF,5%,50V	54583	C3216C0G1H120J
A26C242	283-5004-00			CAP,FXD,CER DI:0.1UF,10%,25V	80009	283-5004-00
A26C243	283-5004-00			CAP,FXD,CER DI:0.1UF,10%,25V	80009	283-5004-00

Component No.	Tektronix Part No.	Serial/Assembly No. Effective	Dscont	Name & Description	Mfr. Code	Mfr. Part No.
A26C244	283-5004-00			CAP,FXD,CER DI:0.1UF,10%,25V	80009	283-5004-00
A26C248	283-5004-00			CAP,FXD,CER DI:0.1UF,10%,25V	80009	283-5004-00
A26C249	283-5004-00			CAP,FXD,CER DI:0.1UF,10%,25V	80009	283-5004-00
A26C250	283-5008-00			CAP,FXD,CER DI:12PF,5%,50V	54583	C3216C0G1H120J
A26C251	283-5022-00			CAP,FXD,CER DI:47PF,5%,50V	54583	
A26C252	281-0267-00			CAP,VAR,CERAMIC:6-50PF,50V	80009	281-0267-00
A26C260	281-0267-00			CAP,VAR,CERAMIC:6-50PF,50V	80009	281-0267-00
A26C261	283-5003-00			CAP,FXD,CER DI:0.01UF,10%,50V	80009	283-5003-00
A26C262	283-5002-00			CAP,FXD,CER DI:1000PF,10%,50V	80009	283-5002-00
A26C263	283-5002-00			CAP,FXD,CER DI:1000PF,10%,50V	80009	283-5002-00
A26C270	281-0267-00			CAP,VAR,CERAMIC:6-50PF,50V	80009	281-0267-00
A26C271	283-5022-00			CAP,FXD,CER DI:47PF,5%,50V	54583	
A26C272	283-5008-00			CAP,FXD,CER DI:12PF,5%,50V	54583	C3216C0G1H120J
A26C273	283-5004-00			CAP,FXD,CER DI:0.1UF,10%,25V	80009	283-5004-00
A26C274	283-5004-00			CAP,FXD,CER DI:0.1UF,10%,25V	80009	283-5004-00
A26C283	283-5004-00			CAP,FXD,CER DI:0.1UF,10%,25V	80009	283-5004-00
A26C292	283-5004-00			CAP,FXD,CER DI:0.1UF,10%,25V	80009	283-5004-00
A26C305	283-5004-00			CAP,FXD,CER DI:0.1UF,10%,25V	80009	283-5004-00
A26C306	283-5004-00			CAP,FXD,CER DI:0.1UF,10%,25V	80009	283-5004-00
A26C307	283-5004-00			CAP,FXD,CER DI:0.1UF,10%,25V	80009	283-5004-00
A26C312	283-5011-00			CAP,FXD,CER DI:33PF,5%,50V	95275	VJ1206A330JXA
A26C320	283-5000-00			CAP,FXD,CER DI:10PF,5%,50V	80009	283-5000-00
A26C321	283-5000-00			CAP,FXD,CER DI:10PF,5%,50V	80009	283-5000-00
A26C322	283-5011-00			CAP,FXD,CER DI:33PF,5%,50V	95275	VJ1206A330JXA
A26C323	283-5004-00			CAP,FXD,CER DI:0.1UF,10%,25V	80009	283-5004-00
A26C324	283-5004-00			CAP,FXD,CER DI:0.1UF,10%,25V	80009	283-5004-00
A26C325	281-0267-00			CAP,VAR,CERAMIC:6-50PF,50V	80009	281-0267-00
A26C326	283-5004-00			CAP,FXD,CER DI:0.1UF,10%,25V	80009	283-5004-00
A26C333	283-5011-00			CAP,FXD,CER DI:33PF,5%,50V	95275	VJ1206A330JXA
A26C334	283-5000-00			CAP,FXD,CER DI:10PF,5%,50V	80009	283-5000-00
A26C335	283-5004-00			CAP,FXD,CER DI:0.1UF,10%,25V	80009	283-5004-00
A26C343	283-5004-00			CAP,FXD,CER DI:0.1UF,10%,25V	80009	283-5004-00
A26C344	283-5004-00			CAP,FXD,CER DI:0.1UF,10%,25V	80009	283-5004-00
A26C350	283-5011-00			CAP,FXD,CER DI:33PF,5%,50V	95275	VJ1206A330JXA
A26C352	283-5011-00			CAP,FXD,CER DI:33PF,5%,50V	95275	VJ1206A330JXA
A26C353	283-5000-00			CAP,FXD,CER DI:10PF,5%,50V	80009	283-5000-00
A26C361	281-0267-00			CAP,VAR,CERAMIC:6-50PF,50V	80009	281-0267-00
A26C362	283-5000-00			CAP,FXD,CER DI:10PF,5%,50V	80009	283-5000-00
A26C363	283-5011-00			CAP,FXD,CER DI:33PF,5%,50V	95275	VJ1206A330JXA
A26C371	283-5004-00			CAP,FXD,CER DI:0.1UF,10%,25V	80009	283-5004-00
A26C372	283-5042-00			CAP,FXD,CER DI:27PF,5%,50V	80009	283-5042-00
A26C374	283-5004-00			CAP,FXD,CER DI:0.1UF,10%,25V	80009	283-5004-00
A26C375	283-5004-00			CAP,FXD,CER DI:0.1UF,10%,25V	80009	283-5004-00
A26C384	283-5004-00			CAP,FXD,CER DI:0.1UF,10%,25V	80009	283-5004-00
A26C385	283-5004-00			CAP,FXD,CER DI:0.1UF,10%,25V	80009	283-5004-00
A26C395	283-5004-00			CAP,FXD,CER DI:0.1UF,10%,25V	80009	283-5004-00
A26C406	283-5004-00			CAP,FXD,CER DI:0.1UF,10%,25V	80009	283-5004-00
A26C407	283-5004-00			CAP,FXD,CER DI:0.1UF,10%,25V	80009	283-5004-00
A26C408	283-5004-00			CAP,FXD,CER DI:0.1UF,10%,25V	80009	283-5004-00
A26C411	283-5027-00			CAP,FXD,CER DI:470PF,5%,50V	54583	
A26C412	283-5027-00			CAP,FXD,CER DI:470PF,5%,50V	54583	
A26C413	281-0267-00			CAP,VAR,CERAMIC:6-50PF,50V	80009	281-0267-00
A26C414	283-5001-00			CAP,FXD,CER DI:100PF,5%,50V	80009	283-5001-00
A26C415	283-5009-00			CAP,FXD,CER DI:15PF,5%,50V	54583	C3216C0G1H150J
A26C416	281-0267-00			CAP,VAR,CERAMIC:6-50PF,50V	80009	281-0267-00
A26C420	283-5004-00			CAP,FXD,CER DI:0.1UF,10%,25V	80009	283-5004-00
A26C421	283-5026-00			CAP,FXD,CER DI:390PF,5%,50V	54583	
A26C422	283-5027-00			CAP,FXD,CER DI:470PF,5%,50V	54583	
A26C423	283-5001-00			CAP,FXD,CER DI:100PF,5%,50V	80009	283-5001-00

Component No.	Tektronix Part No.	Serial/Assembly No. Effective	Dscont	Name & Description	Mfr. Code	Mfr. Part No.
A26C424	283-5009-00			CAP,FXD,CER DI:15PF,5%,50V	54583	C3216C0G1H150J
A26C425	281-0267-00			CAP,VAR,CERAMIC:6-50PF,50V	80009	281-0267-00
A26C430	283-5027-00			CAP,FXD,CER DI:470PF,5%,50V	54583	
A26C431	283-5027-00			CAP,FXD,CER DI:470PF,5%,50V	54583	
A26C432	283-5004-00			CAP,FXD,CER DI:0.1UF,10%,25V	80009	283-5004-00
A26C433	283-5004-00			CAP,FXD,CER DI:0.1UF,10%,25V	80009	283-5004-00
A26C434	283-5004-00			CAP,FXD,CER DI:0.1UF,10%,25V	80009	283-5004-00
A26C435	283-5004-00			CAP,FXD,CER DI:0.1UF,10%,25V	80009	283-5004-00
A26C436	283-5004-00			CAP,FXD,CER DI:0.1UF,10%,25V	80009	283-5004-00
A26C438	283-5004-00			CAP,FXD,CER DI:0.1UF,10%,25V	80009	283-5004-00
A26C441	283-5004-00			CAP,FXD,CER DI:0.1UF,10%,25V	80009	283-5004-00
A26C444	283-5027-00			CAP,FXD,CER DI:470PF,5%,50V	54583	
A26C445	283-5027-00			CAP,FXD,CER DI:470PF,5%,50V	54583	
A26C450	281-0267-00			CAP,VAR,CERAMIC:6-50PF,50V	80009	281-0267-00
A26C451	281-0267-00			CAP,VAR,CERAMIC:6-50PF,50V	80009	281-0267-00
A26C452	283-5001-00			CAP,FXD,CER DI:100PF,5%,50V	80009	283-5001-00
A26C453	283-5009-00			CAP,FXD,CER DI:15PF,5%,50V	54583	C3216C0G1H150J
A26C454	283-5026-00			CAP,FXD,CER DI:390PF,5%,50V	54583	
A26C455	283-5027-00			CAP,FXD,CER DI:470PF,5%,50V	54583	
A26C456	283-5001-00			CAP,FXD,CER DI:100PF,5%,50V	80009	283-5001-00
A26C457	283-5009-00			CAP,FXD,CER DI:15PF,5%,50V	54583	C3216C0G1H150J
A26C462	283-5027-00			CAP,FXD,CER DI:470PF,5%,50V	54583	
A26C463	283-5027-00			CAP,FXD,CER DI:470PF,5%,50V	54583	
A26C464	283-5004-00			CAP,FXD,CER DI:0.1UF,10%,25V	80009	283-5004-00
A26C465	283-5004-00			CAP,FXD,CER DI:0.1UF,10%,25V	80009	283-5004-00
A26C466	283-5004-00			CAP,FXD,CER DI:0.1UF,10%,25V	80009	283-5004-00
A26C472	283-5004-00			CAP,FXD,CER DI:0.1UF,10%,25V	80009	283-5004-00
A26C473	283-5004-00			CAP,FXD,CER DI:0.1UF,10%,25V	80009	283-5004-00
A26C491	283-5004-00			CAP,FXD,CER DI:0.1UF,10%,25V	80009	283-5004-00
A26C503	283-5004-00			CAP,FXD,CER DI:0.1UF,10%,25V	80009	283-5004-00
A26C504	283-5004-00			CAP,FXD,CER DI:0.1UF,10%,25V	80009	283-5004-00
A26C505	283-5004-00			CAP,FXD,CER DI:0.1UF,10%,25V	80009	283-5004-00
A26C506	283-5011-00			CAP,FXD,CER DI:33PF,5%,50V	95275	VJ1206A330JXA
A26C507	283-5011-00			CAP,FXD,CER DI:33PF,5%,50V	95275	VJ1206A330JXA
A26C510	283-5011-00			CAP,FXD,CER DI:33PF,5%,50V	95275	VJ1206A330JXA
A26C511	283-5002-00			CAP,FXD,CER DI:1000PF,10%,50V	80009	283-5002-00
A26C512	283-5014-00			CAP,FXD,CER DI:330PF,5%,50V,	80009	283-5014-00
A26C520	283-5014-00			CAP,FXD,CER DI:330PF,5%,50V	80009	283-5014-00
A26C521	283-5022-00			CAP,FXD,CER DI:47PF,5%,50V	54583	
A26C522	281-0267-00			CAP,VAR,CERAMIC:6-50PF,50V	80009	281-0267-00
A26C530	283-5006-00			CAP,FXD,CER DI:5PF,+/- 0.25PF,50V	54583	C3216C0G1H050C
A26C531	283-5022-00			CAP,FXD,CER DI:47PF,5%,50V	54583	
A26C532	283-5004-00			CAP,FXD,CER DI:0.1UF,10%,25V	80009	283-5004-00
A26C533	283-5004-00			CAP,FXD,CER DI:0.1UF,10%,25V	80009	283-5004-00
A26C537	283-5004-00			CAP,FXD,CER DI:0.1UF,10%,25V	80009	283-5004-00
A26C540	283-5004-00			CAP,FXD,CER DI:0.1UF,10%,25V	80009	283-5004-00
A26C541	283-5006-00			CAP,FXD,CER DI:5PF,+/- 0.25PF,50V	54583	C3216C0G1H050C
A26C542	283-5022-00			CAP,FXD,CER DI:47PF,5%,50V	54583	
A26C543	283-5022-00			CAP,FXD,CER DI:47PF,5%,50V	54583	
A26C544	281-0267-00			CAP,VAR,CERAMIC:6-50PF,50V	80009	281-0267-00
A26C551	283-5002-00			CAP,FXD,CER DI:1000PF,10%,50V	80009	283-5002-00
A26C552	283-5014-00			CAP,FXD,CER DI:330PF,5%,50V	80009	283-5014-00
A26C553	283-5014-00			CAP,FXD,CER DI:330PF,5%,50V	80009	283-5014-00
A26C561	281-0267-00			CAP,VAR,CERAMIC:6-50PF,50V	80009	281-0267-00
A26C562	283-5011-00			CAP,FXD,CER DI:33PF,5%,50V	95275	VJ1206A330JXA
A26C563	283-5011-00			CAP,FXD,CER DI:33PF,5%,50V	95275	VJ1206A330JXA
A26C564	283-5011-00			CAP,FXD,CER DI:33PF,5%,50V	95275	VJ1206A330JXA
A26C565	283-5004-00			CAP,FXD,CER DI:0.1UF,10%,25V	80009	283-5004-00
A26C570	283-5004-00			CAP,FXD,CER DI:0.1UF,10%,25V	80009	283-5004-00

Component No.	Tektronix Part No.	Serial/Assembly No. Effective	Dscont	Name & Description	Mfr. Code	Mfr. Part No.
A26C571	283-5004-00			CAP,FXD,CER DI:0.1UF,10%,25V	80009	283-5004-00
A26C780	290-0944-00			CAP,FXD,ELCTLT:220UF,+50-20%,10V	55680	UVX1C221MPA
A26J110	131-0951-00			CONN,RF JACK::	98291	051-051-0159-220
A26J180	131-0951-00		B034199	CONN,RF JACK::	98291	051-051-0159-220
A22J180	131-6278-00	B044200				
A26J790	131-2920-00			CONN,HDR:PCB,;MALE,RTANG,2 X 5,0.1 CTR,0.31 8 MLG X 0.110 TAIL,0.238 H,30 GOLD;,,	80009	131-2920-00
A26L110	108-5027-00			COIL,RF:	80009	108-5027-00
A26L215	108-1326-00			COIL,RF:FXD, TOROID, 2.1UH, +/-10%, DCR 0.0 65 OHM, Q=150@10MHZ,PKG DIA 0.5 X 0.2	0JR03	108-1326-00
A26L236	108-1326-00			COIL,RF:FXD, TOROID, 2.1UH, +/-10%, DCR 0.0 65 OHM, Q=150@10MHZ,PKG DIA 0.5 X 0.2	0JR03	108-1326-00
A26L310	120-0902-00			XFMR,TOROID:	80009	120-0902-00
A26L336	120-0902-00			XFMR,TOROID:	80009	120-0902-00
A26L354	108-1326-00			COIL,RF:FXD, TOROID, 2.1UH, +/-10%, DCR 0.0 65 OHM, Q=150@10MHZ,PKG DIA 0.5 X 0.2	0JR03	108-1326-00
A26L370	108-1326-00			COIL,RF:FXD, TOROID, 2.1UH, +/-10%, DCR 0.0 65 OHM, Q=150@10MHZ,PKG DIA 0.5 X 0.2	0JR03	108-1326-00
A26L386	108-5027-00			COIL,RF:	80009	108-5027-00
A26L513	108-1326-00			COIL,RF:FXD, TOROID, 2.1UH, +/-10%, DCR 0.0 65 OHM, Q=150@10MHZ,PKG DIA 0.5 X 0.2	0JR03	108-1326-00
A26L523	108-1326-00			COIL,RF:FXD, TOROID, 2.1UH, +/-10%, DCR 0.0 65 OHM, Q=150@10MHZ,PKG DIA 0.5 X 0.2	0JR03	108-1326-00
A26L550	108-1326-00			COIL,RF:FXD, TOROID, 2.1UH, +/-10%, DCR 0.0 65 OHM, Q=150@10MHZ,PKG DIA 0.5 X 0.2	0JR03	108-1326-00
A26L560	108-1326-00			COIL,RF:FXD, TOROID, 2.1UH, +/-10%, DCR 0.0 65 OHM, Q=150@10MHZ,PKG DIA 0.5 X 0.2	0JR03	108-1326-00
A26L630	108-1402-00			COIL,RF:FXD,2.4UH,5%,TOROID	TK1345	108-1402-00
A26L640	108-1402-00			COIL,RF:FXD,2.4UH,5%,TOROID	TK1345	108-1402-00
A26L650	108-1402-00			COIL,RF:FXD,2.4UH,5%,TOROID	TK1345	108-1402-00
A26L660	108-1402-00			COIL,RF:FXD,2.4UH,5%,TOROID	TK1345	108-1402-00
A26L790	108-1262-00			COIL,RF:FXD,100UH,10%,Q=30,SRF 8.2MHZ,DCR 0 .23 OHM,I MAX 0.75ARADIAL LEAD	80009	108-1262-00
A26Q112	151-5005-00			TRANSISTOR,SIG:BIPOLAR,PNP;20V,1.0A,60MHZ,A MPLIFIER;BCX69/BC869,SOT-89,12MM T/R	04713	BCX69T1
A26Q113	151-5004-00			TRANSISTOR,SIG:BIPOLAR,NPN;20V,1.0A,65MHZ,A MPLIFIER;BCX68/BC868,SOT-89,12MM T/R	04713	BCX68
A26Q143	151-5009-00			TRANSISTOR,SIG:BIPOLAR,NPN;25V,300MA,1.2GHZ ,AMPLIFIER;BFQ17,SOT-89,12MM T/R	80009	151-5009-00
A26Q200	151-5005-00			TRANSISTOR,SIG:BIPOLAR,PNP;20V,1.0A,60MHZ,A MPLIFIER;BCX69/BC869,SOT-89,12MM T/R	04713	BCX69T1
A26Q201	151-5004-00			TRANSISTOR,SIG:BIPOLAR,NPN;20V,1.0A,65MHZ,A MPLIFIER;BCX68/BC868,SOT-89,12MM T/R	04713	BCX68
A26Q245	151-5009-00			TRANSISTOR,SIG:BIPOLAR,NPN;25V,300MA,1.2GHZ ,AMPLIFIER;BFQ17,SOT-89,12MM T/R	80009	151-5009-00
A26Q249	151-5009-00			TRANSISTOR,SIG:BIPOLAR,NPN;25V,300MA,1.2GHZ ,AMPLIFIER;BFQ17,SOT-89,12MM T/R	80009	151-5009-00
A26Q276	151-5004-00			TRANSISTOR,SIG:BIPOLAR,NPN;20V,1.0A,65MHZ,A MPLIFIER;BCX68/BC868,SOT-89,12MM T/R	04713	BCX68
A26Q280	151-5005-00			TRANSISTOR,SIG:BIPOLAR,PNP;20V,1.0A,60MHZ,A MPLIFIER;BCX69/BC869,SOT-89,12MM T/R	04713	BCX69T1
A26Q300	151-5005-00			TRANSISTOR,SIG:BIPOLAR,PNP;20V,1.0A,60MHZ,A MPLIFIER;BCX69/BC869,SOT-89,12MM T/R	04713	BCX69T1
A26Q301	151-5004-00			TRANSISTOR,SIG:BIPOLAR,NPN;20V,1.0A,65MHZ,A MPLIFIER;BCX68/BC868,SOT-89,12MM T/R	04713	BCX68
A26Q320	151-5009-00			TRANSISTOR,SIG:BIPOLAR,NPN;25V,300MA,1.2GHZ ,AMPLIFIER;BFQ17,SOT-89,12MM T/R	80009	151-5009-00
A26Q339	151-5009-00			TRANSISTOR,SIG:BIPOLAR,NPN;25V,300MA,1.2GHZ ,AMPLIFIER;BFQ17,SOT-89,12MM T/R	80009	151-5009-00

Component No.	Tektronix Part No.	Serial/Assembly No. Effective	Dscont	Name & Description	Mfr. Code	Mfr. Part No.
A26Q377	151-5004-00			TRANSISTOR,SIG:BIPOLAR,NPN;20V,1.0A,65MHZ,A MPLIFIER;BCX68/BC868,SOT-89,12MM T/R	04713	BCX68
A26Q378	151-5004-00			TRANSISTOR,SIG:BIPOLAR,NPN;20V,1.0A,65MHZ,A MPLIFIER;BCX68/BC868,SOT-89,12MM T/R	04713	BCX68
A26Q379	151-5005-00			TRANSISTOR,SIG:BIPOLAR,PNP;20V,1.0A,60MHZ,A MPLIFIER;BCX69/BC869,SOT-89,12MM T/R	04713	BCX69T1
A26Q380	151-5005-00			TRANSISTOR,SIG:BIPOLAR,PNP;20V,1.0A,60MHZ,A MPLIFIER;BCX69/BC869,SOT-89,12MM T/R	04713	BCX69T1
A26Q396	151-5001-00			TRANSISTOR,SIG:BIPOLAR,NPN;40V,200MA,300MHZ ,AMPLIFIER;MMBT3904L,TO-236/SOT-23,8MM T&R	80009	151-5001-00
A26Q400	151-5005-00			TRANSISTOR,SIG:BIPOLAR,PNP;20V,1.0A,60MHZ,A MPLIFIER;BCX69/BC869,SOT-89,12MM T/R	04713	BCX69T1
A26Q401	151-5004-00			TRANSISTOR,SIG:BIPOLAR,NPN;20V,1.0A,65MHZ,A MPLIFIER;BCX68/BC868,SOT-89,12MM T/R	04713	BCX68
A26Q405	151-5005-00			TRANSISTOR,SIG:BIPOLAR,PNP;20V,1.0A,60MHZ,A MPLIFIER;BCX69/BC869,SOT-89,12MM T/R	04713	BCX69T1
A26Q406	151-5004-00			TRANSISTOR,SIG:BIPOLAR,NPN;20V,1.0A,65MHZ,A MPLIFIER;BCX68/BC868,SOT-89,12MM T/R	04713	BCX68
A26Q430	151-5009-00			TRANSISTOR,SIG:BIPOLAR,NPN;25V,300MA,1.2GHZ ,AMPLIFIER;BFQ17,SOT-89,12MM T/R	80009	151-5009-00
A26Q460	151-5004-00			TRANSISTOR,SIG:BIPOLAR,NPN;20V,1.0A,65MHZ,A MPLIFIER;BCX68/BC868,SOT-89,12MM T/R	04713	BCX68
A26Q461	151-5005-00			TRANSISTOR,SIG:BIPOLAR,PNP;20V,1.0A,60MHZ,A MPLIFIER;BCX69/BC869,SOT-89,12MM T/R	04713	BCX69T1
A26Q470	151-5004-00			TRANSISTOR,SIG:BIPOLAR,NPN;20V,1.0A,65MHZ,A MPLIFIER;BCX68/BC868,SOT-89,12MM T/R	04713	BCX68
A26Q471	151-5005-00			TRANSISTOR,SIG:BIPOLAR,PNP;20V,1.0A,60MHZ,A MPLIFIER;BCX69/BC869,SOT-89,12MM T/R	04713	BCX69T1
A26Q539	151-5009-00			TRANSISTOR,SIG:BIPOLAR,NPN;25V,300MA,1.2GHZ ,AMPLIFIER;BFQ17,SOT-89,12MM T/R	80009	151-5009-00
A26R101	321-5018-00			RES,FXD:METAL FILM;1.0K OHM,1%,0.125W,TC=10 0 PPM;1206,T&R	80009	321-5018-00
A26R140	321-5014-00			RES,FXD:METAL FILM;475 OHM,1%,0.125W,TC=100 PPM;1206,T&R	80009	321-5014-00
A26R141	321-5000-00			RES,FXD:METAL FILM;10 OHM,1%,0.125W,TC=100 PPM;1206,T&R	57668	MCR18EZHFW10E
A26R151	321-5013-00			RES,FXD:METAL FILM;392 OHM,1%,0.125W,TC=100 PPM;1206,T&R	80009	321-5013-00
A26R152	321-5001-00			RES,FXD:METAL FILM;12.1 OHM,1%,0.125W,TC=10 0 PPM;1206,T&R	57668	MCR18EZHFW 12E1
A26R153	321-5013-00			RES,FXD:METAL FILM;392 OHM,1%,0.125W,TC=100 PPM;1206,T&R	80009	321-5013-00
A26R202	321-5018-00			RES,FXD:METAL FILM;1.0K OHM,1%,0.125W,TC=10 0 PPM;1206,T&R	80009	321-5018-00
A26R203	321-5018-00			RES,FXD:METAL FILM;1.0K OHM,1%,0.125W,TC=10 0 PPM;1206,T&R	80009	321-5018-00
A26R204	321-5018-00			RES,FXD:METAL FILM;1.0K OHM,1%,0.125W,TC=10 0 PPM;1206,T&R	80009	321-5018-00
A26R212	321-5018-00			RES,FXD:METAL FILM;1.0K OHM,1%,0.125W,TC=10 0 PPM;1206,T&R	80009	321-5018-00
A26R213	321-5018-00			RES,FXD:METAL FILM;1.0K OHM,1%,0.125W,TC=10 0 PPM;1206,T&R	80009	321-5018-00
A26R214	321-5018-00			RES,FXD:METAL FILM;1.0K OHM,1%,0.125W,TC=10 0 PPM;1206,T&R	80009	321-5018-00
A26R235	321-5012-00			RES,FXD:METAL FILM;332 OHM,1%,0.125W,TC=100 PPM;1206,T&R	80009	321-5012-00
A26R240	321-5011-00			RES,FXD:METAL FILM;274 OHM,1%,0.125W,TC=100 PPM;1206,T&R	80009	321-5011-00

Component No.	Tektronix Part No.	Serial/Assembly No. Effective	Dscont	Name & Description	Mfr. Code	Mfr. Part No.
A26R241	321-5014-00			RES,FXD:METAL FILM;475 OHM,1%,0.125W,TC=100 PPM;1206,T&R	80009	321-5014-00
A26R242	321-5003-00			RES,FXD:METAL FILM;18.2 OHM,1%,0.125W,TC=10 0 PPM;1206,T&R	57668	MCR18EZHFW 18E2
A26R243	321-5050-00			RES,FXD:METAL FILM;33.2 OHM,1%,0.125W,TC=10 0 PPM;1206,T&R	57668	MCR18FWEA33E2
A26R244	321-5013-00			RES,FXD:METAL FILM;392 OHM,1%,0.125W,TC=100 PPM;1206,T&R	80009	321-5013-00
A26R245	321-5001-00			RES,FXD:METAL FILM;12.1 OHM,1%,0.125W,TC=10 0 PPM;1206,T&R	57668	MCR18EZHFW 12E1
A26R246	321-5012-00			RES,FXD:METAL FILM;332 OHM,1%,0.125W,TC=100 PPM;1206,T&R	80009	321-5012-00
A26R247	321-5014-00			RES,FXD:METAL FILM;475 OHM,1%,0.125W,TC=100 PPM;1206,T&R	80009	321-5014-00
A26R248	321-5050-00			RES,FXD:METAL FILM;33.2 OHM,1%,0.125W,TC=10 0 PPM;1206,T&R	57668	MCR18FWEA33E2
A26R249	321-5050-00			RES,FXD:METAL FILM;33.2 OHM,1%,0.125W,TC=10 0 PPM;1206,T&R	57668	MCR18FWEA33E2
A26R253	321-5013-00			RES,FXD:METAL FILM;392 OHM,1%,0.125W,TC=100 PPM;1206,T&R	80009	321-5013-00
A26R255	321-5011-00			RES,FXD:METAL FILM;274 OHM,1%,0.125W,TC=100 PPM;1206,T&R	80009	321-5011-00
A26R275	321-5018-00			RES,FXD:METAL FILM;1.0K OHM,1%,0.125W,TC=10 0 PPM;1206,T&R	80009	321-5018-00
A26R281	321-5018-00			RES,FXD:METAL FILM;1.0K OHM,1%,0.125W,TC=10 0 PPM;1206,T&R	80009	321-5018-00
A26R282	321-5018-00			RES,FXD:METAL FILM;1.0K OHM,1%,0.125W,TC=10 0 PPM;1206,T&R	80009	321-5018-00
A26R290	321-5018-00			RES,FXD:METAL FILM;1.0K OHM,1%,0.125W,TC=10 0 PPM;1206,T&R	80009	321-5018-00
A26R291	321-5047-00			RES,FXD:METAL FILM;100K OHM,1%,0.125W,TC=10 0 PPM;1206,T&R	80009	321-5047-00
A26R302	321-5018-00			RES,FXD:METAL FILM;1.0K OHM,1%,0.125W,TC=10 0 PPM;1206,T&R	80009	321-5018-00
A26R303	321-5018-00			RES,FXD:METAL FILM;1.0K OHM,1%,0.125W,TC=10 0 PPM;1206,T&R	80009	321-5018-00
A26R304	321-5018-00			RES,FXD:METAL FILM;1.0K OHM,1%,0.125W,TC=10 0 PPM;1206,T&R	80009	321-5018-00
A26R313	321-5019-00			RES,FXD:METAL FILM;1.21K OHM,1%,0.125W,TC=1 00 PPM;1206,T&R	80009	321-5019-00
A26R314	321-5019-00			RES,FXD:METAL FILM;1.21K OHM,1%,0.125W,TC=1 00 PPM;1206,T&R	80009	321-5019-00
A26R315	321-5045-00			RES,FXD:METAL FILM;68.1 OHM,1%,0.125W,TC=10 0 PPM;1206,T&R	80009	321-5045-00
A26R325	321-5000-00			RES,FXD:METAL FILM;10 OHM,1%,0.125W,TC=100 PPM;1206,T&R	57668	MCR18EZHFW10E
A26R326	321-5050-00			RES,FXD:METAL FILM;33.2 OHM,1%,0.125W,TC=10 0 PPM;1206,T&R	57668	MCR18FWEA33E2
A26R327	321-5014-00			RES,FXD:METAL FILM;475 OHM,1%,0.125W,TC=100 PPM;1206,T&R	80009	321-5014-00
A26R328	321-5019-00			RES,FXD:METAL FILM;1.21K OHM,1%,0.125W,TC=1 00 PPM;1206,T&R	80009	321-5019-00
A26R329	321-5045-00			RES,FXD:METAL FILM;68.1 OHM,1%,0.125W,TC=10 0 PPM;1206,T&R	80009	321-5045-00
A26R330	321-5019-00			RES,FXD:METAL FILM;1.21K OHM,1%,0.125W,TC=1 00 PPM;1206,T&R	80009	321-5019-00
A26R331	321-5002-00			RES,FXD:METAL FILM;15 OHM,1%,0.125W,TC=100 PPM;1206,T&R	57668	MCR18EZHFW 15E0

Component No.	Tektronix Part No.	Serial/Assembly No. Effective	Dscont	Name & Description	Mfr. Code	Mfr. Part No.
A26R332	321-5012-00			RES,FXD:METAL FILM;332 OHM,1%,0.125W,TC=100 PPM;1206,T&R	80009	321-5012-00
A26R338	321-5050-00			RES,FXD:METAL FILM;33.2 OHM,1%,0.125W,TC=10 0 PPM;1206,T&R	57668	MCR18FWEA33E2
A26R339	321-5014-00			RES,FXD:METAL FILM;475 OHM,1%,0.125W,TC=100 PPM;1206,T&R	80009	321-5014-00
A26R340	321-5000-00			RES,FXD:METAL FILM;10 OHM,1%,0.125W,TC=100 PPM;1206,T&R	57668	MCR18EZHFW10E
A26R341	321-5002-00			RES,FXD:METAL FILM;15 OHM,1%,0.125W,TC=100 PPM;1206,T&R	57668	MCR18EZHFW 15E0
A26R342	321-5012-00			RES,FXD:METAL FILM;332 OHM,1%,0.125W,TC=100 PPM;1206,T&R	80009	321-5012-00
A26R376	321-5018-00			RES,FXD:METAL FILM;1.0K OHM,1%,0.125W,TC=10 0 PPM;1206,T&R	80009	321-5018-00
A26R381	321-5018-00			RES,FXD:METAL FILM;1.0K OHM,1%,0.125W,TC=10 0 PPM;1206,T&R	80009	321-5018-00
A26R382	321-5018-00			RES,FXD:METAL FILM;1.0K OHM,1%,0.125W,TC=10 0 PPM;1206,T&R	80009	321-5018-00
A26R383	321-5018-00			RES,FXD:METAL FILM;1.0K OHM,1%,0.125W,TC=10 0 PPM;1206,T&R	80009	321-5018-00
A26R390	321-5018-00			RES,FXD:METAL FILM;1.0K OHM,1%,0.125W,TC=10 0 PPM;1206,T&R	80009	321-5018-00
A26R391	321-5030-00			RES,FXD:METAL FILM;10.0K OHM,1%,0.125W,TC=1 00 PPM;1206,T&R	80009	321-5030-00
A26R394	321-5030-00			RES,FXD:METAL FILM;10.0K OHM,1%,0.125W,TC=1 00 PPM;1206,T&R	80009	321-5030-00
A26R397	321-5047-00			RES,FXD:METAL FILM;100K OHM,1%,0.125W,TC=10 0 PPM;1206,T&R	80009	321-5047-00
A26R398	321-5047-00			RES,FXD:METAL FILM;100K OHM,1%,0.125W,TC=10 0 PPM;1206,T&R	80009	321-5047-00
A26R399	321-5018-00			RES,FXD:METAL FILM;1.0K OHM,1%,0.125W,TC=10 0 PPM;1206,T&R	80009	321-5018-00
A26R402	321-5018-00			RES,FXD:METAL FILM;1.0K OHM,1%,0.125W,TC=10 0 PPM;1206,T&R	80009	321-5018-00
A26R403	321-5018-00			RES,FXD:METAL FILM;1.0K OHM,1%,0.125W,TC=10 0 PPM;1206,T&R	80009	321-5018-00
A26R404	321-5018-00			RES,FXD:METAL FILM;1.0K OHM,1%,0.125W,TC=10 0 PPM;1206,T&R	80009	321-5018-00
A26R430	321-5014-00	B010100	B023247	RES,FXD:METAL FILM;475 OHM,1%,0.125W	80009	321-5014-00
A26R430	321-5012-00	B023248		RES,FXD:THICK FILM,332 OHM,1%,0.125W	80009	321-5012-00
A26R431	321-5014-00	B010100	B023247	RES,FXD:METAL FILM;475 OHM,1%,0.125W	80009	321-5014-00
A26R431	321-5012-00	B023248		RES,FXD:THICK FILM,332 OHM,1%,0.125W	80009	321-5012-00
A26R432	321-5001-00	B010100	B023247	RES,FXD:METAL FILM;12.1 OHM,1%,0.125W	57668	MCR18EZHFW 12E1
A26R432	321-5002-00	B023248		RES,FXD:THICK FILM,15 OHM,1%,0.125W	80009	321-5002-00
A26R433	321-5000-00			RES,FXD:METAL FILM;10 OHM,1%,0.125W	57668	MCR18EZHFW10E
A26R434	321-5014-00	B010100	B023247	RES,FXD:METAL FILM;475 OHM,1%,0.125W	80009	321-5014-00
A26R434	321-5011-00	B023248		RES,FXD:THICK FILM,274 OHM,1%,0.125W	80009	321-5011-00
A26R435	321-5001-00	B010100	B023247	RES,FXD:METAL FILM;12.1 OHM,1%,0.125W	57668	MCR18EZHFW 12E1
A26R435	321-5003-00	B023248		RES,FXD:THICK FILM,18.2 OHM,1%,0.125W	80009	321-5003-00
A26R436	321-5014-00	B010100	B023247	RES,FXD:METAL FILM;475 OHM,1%,0.125W	80009	321-5014-00
A26R436	321-5011-00	B023248		RES,FXD:THICK FILM,274 OHM,1%,0.125W	80009	321-5011-00
A26R437	321-5000-00			RES,FXD:METAL FILM;10 OHM,1%,0.125W	57668	MCR18EZHFW10E
A26R438	321-5050-00			RES,FXD:METAL FILM;33.2 OHM,1%,0.125W,TC=10 0 PPM;1206,T&R	57668	MCR18FWEA33E2
A26R439	321-5014-00			RES,FXD:METAL FILM;475 OHM,1%,0.125W,TC=100 PPM;1206,T&R	80009	321-5014-00

Component No.	Tektronix Part No.	Serial/Assembly No. Effective	Dscont	Name & Description	Mfr. Code	Mfr. Part No.
A26R440	321-5010-00	B010100	B023247	RES,FXD:METAL FILM;221 OHM,1%,0.125W	80009	321-5010-00
A26R440	321-5007-00	B023248		RES,FXD:THICK FILM,121 OHM,1%,0.125W	80009	321-5007-00
A26R442	321-5004-00	B010100	B023247	RES,FXD:METAL FILM;22.1 OHM,1%,0.125W	80009	321-5004-00
A26R442	321-5043-00	B023248		RES,FXD:THICK FILM,47.5 OHM,1%,0.125W	80009	321-5043-00
A26R443	321-5010-00	B010100	B023247	RES,FXD:METAL FILM;221 OHM,1%,0.125W	80009	321-5010-00
A26R443	321-5007-00	B023248		RES,FXD:THICK FILM,121 OHM,1%,0.125W	80009	321-5007-00
A26R467	321-5018-00			RES,FXD:METAL FILM;1.0K OHM,1%,0.125W,TC=100 PPM;1206,T&R	80009	321-5018-00
A26R468	321-5018-00			RES,FXD:METAL FILM;1.0K OHM,1%,0.125W,TC=100 PPM;1206,T&R	80009	321-5018-00
A26R469	321-5018-00			RES,FXD:METAL FILM;1.0K OHM,1%,0.125W,TC=100 PPM;1206,T&R	80009	321-5018-00
A26R474	321-5018-00			RES,FXD:METAL FILM;1.0K OHM,1%,0.125W,TC=100 PPM;1206,T&R	80009	321-5018-00
A26R475	321-5018-00			RES,FXD:METAL FILM;1.0K OHM,1%,0.125W,TC=100 PPM;1206,T&R	80009	321-5018-00
A26R476	321-5018-00			RES,FXD:METAL FILM;1.0K OHM,1%,0.125W,TC=100 PPM;1206,T&R	80009	321-5018-00
A26R500	321-5018-00			RES,FXD:METAL FILM;1.0K OHM,1%,0.125W,TC=100 PPM;1206,T&R	80009	321-5018-00
A26R501	321-5018-00			RES,FXD:METAL FILM;1.0K OHM,1%,0.125W,TC=100 PPM;1206,T&R	80009	321-5018-00
A26R502	321-5018-00			RES,FXD:METAL FILM;1.0K OHM,1%,0.125W,TC=100 PPM;1206,T&R	80009	321-5018-00
A26R534	321-5050-00			RES,FXD:METAL FILM;33.2 OHM,1%,0.125W,TC=100 PPM;1206,T&R	57668	MCR18FWEA33E2
A26R535	321-5009-00			RES,FXD:METAL FILM;182 OHM,1%,0.125W,TC=100 PPM;1206,T&R	80009	321-5009-00
A26R536	321-5009-00			RES,FXD:METAL FILM;182 OHM,1%,0.125W,TC=100 PPM;1206,T&R	80009	321-5009-00
A26R537	321-5050-00			RES,FXD:METAL FILM;33.2 OHM,1%,0.125W,TC=100 PPM;1206,T&R	57668	MCR18FWEA33E2
A26R538	321-5000-00			RES,FXD:METAL FILM;10 OHM,1%,0.125W,TC=100 PPM;1206,T&R	57668	MCR18EZHFW10E
A26R545	321-5014-00			RES,FXD:METAL FILM;475 OHM,1%,0.125W,TC=100 PPM;1206,T&R	80009	321-5014-00
A26R546	321-5009-00			RES,FXD:METAL FILM;182 OHM,1%,0.125W,TC=100 PPM;1206,T&R	80009	321-5009-00
A26R547	321-5050-00			RES,FXD:METAL FILM;33.2 OHM,1%,0.125W,TC=100 PPM;1206,T&R	57668	MCR18FWEA33E2
A26R548	321-5009-00			RES,FXD:METAL FILM;182 OHM,1%,0.125W,TC=100 PPM;1206,T&R	80009	321-5009-00
A26R572	321-5018-00			RES,FXD:METAL FILM;1.0K OHM,1%,0.125W,TC=100 PPM;1206,T&R	80009	321-5018-00
A26R573	321-5018-00			RES,FXD:METAL FILM;1.0K OHM,1%,0.125W,TC=100 PPM;1206,T&R	80009	321-5018-00
A26R574	321-5018-00			RES,FXD:METAL FILM;1.0K OHM,1%,0.125W,TC=100 PPM;1206,T&R	80009	321-5018-00
A26T144	120-1720-00			TRANSFORMER,RF:BALUN,1:11 RATIO,TAPPED AT 4 TURNS,W/HOLDER,CORE 276-0712-00	0JR03	120-1720-00
A26T245	120-1720-00			TRANSFORMER,RF:BALUN,1:11 RATIO,TAPPED AT 4 TURNS,W/HOLDER,CORE 276-0712-00	0JR03	120-1720-00
A26T320	120-1720-00			TRANSFORMER,RF:BALUN,1:11 RATIO,TAPPED AT 4 TURNS,W/HOLDER,CORE 276-0712-00	0JR03	120-1720-00
A26T345	120-1720-00			TRANSFORMER,RF:BALUN,1:11 RATIO,TAPPED AT 4 TURNS,W/HOLDER,CORE 276-0712-00	0JR03	120-1720-00
A26T430	120-1720-00			TRANSFORMER,RF:BALUN,1:11 RATIO,TAPPED AT 4 TURNS,W/HOLDER,CORE 276-0712-00	0JR03	120-1720-00

Component No.	Tektronix Part No.	Serial/Assembly No. Effective	Dscont	Name & Description	Mfr. Code	Mfr. Part No.
A26T530	120-1720-00			TRANSFORMER,RF:BALUN,1:11 RATIO,TAPPED AT 4 TURNS,W/HOLDER,CORE 276-0712-00	0JR03	120-1720-00
A26T901	120-1720-00			TRANSFORMER,RF:BALUN,1:11 RATIO,TAPPED AT 4 TURNS,W/HOLDER,CORE 276-0712-00	0JR03	120-1720-00
A26U190	156-5298-00			IC,LINEAR:BIPOLAR,VOLTAGE REGULATOR;POSITIV E,5V,100MA,5%;MC78L05ACD,SO8.150,TUBE	80009	156-5298-00
A26U390	156-5021-01			IC,DIGITAL:CMOS,REGISTER;8-STAGE SHIFT/STOR AGE, 3-STATE;4094,SO16.150,16MM T&R	80009	156-5021-01
A26U490	156-5088-00			IC,DIGITAL:HCTCMOS,DEMUX/DECODER;3-TO-8 DEC ODER;74HCT138,SO16.150,TUBE	80009	156-5088-00
A26U590	156-5081-01			IC,DIGITAL:HCTMOS,GATE;HEX INVERTER;74HCT04 ,SO14.150,16MM T&R	80009	156-5081-01
A26Y224	158-0338-00	B010101	B010172	XTAL UNIT,QTZ:2500 OHM,9KHZ	80009	158-0338-00
A26Y224	158-0372-00	B010173		XTAL UNIT,QTZ:SET OF 3 : 2 POLE MONOLITHIC CRYSTAL FILTER,CENTER FREQ 10 MHZ,PASSBAND (MATCHED SET WITH A26Y225)	80009	158-0372-00
A26Y225	158-0338-00	B010101	B010172	XTAL UNIT,QTZ:2500 OHM,9KHZ	80009	158-0338-00
A26Y225	158-0372-00	B010173		XTAL UNIT,QTZ:SET OF 3 : 2 POLE MONOLITHIC CRYSTAL FILTER,CENTER FREQ 10 MHZ,PASSBAND (MATCHED SET WITH A26Y224)	80009	158-0372-00
A26Y311	158-0337-00			XTAL UNIT,QTZ:IMPED 360 OHM,USED IN CRYSTAL FILTER:CENTER FREQ 10MHZPASSBAND 1 KHZ, SE T OF 2 (MATCHED SET WITH A26Y337)	59492	158-0337-00
A26Y337	158-0337-00			XTAL UNIT,QTZ:IMPED 360 OHM;USED IN CRYSTAL FILTER:CENTER FREQ 10MHZPASSBAND 1 KHZ, SE T OF 2 (MATCHED SET WITH A26Y311)	59492	158-0337-00
A26Y360	158-0324-00	B010101	B010172	XTAL UNIT,QTZ:SET OF 3 : 3 POLE MONOLITHIC CRYSTAL FILTERS, CENTER	34630	001-56-450
A26Y360	158-0372-00	B010173		XTAL UNIT,QTZ:SET OF 3 : 2 POLE MONOLITHIC CRYSTAL FILTER,CENTER FREQ 10 MHZ,PASSBAND	80009	158-0372-00
A26Y417	158-0356-00	B010100	B023247	XTAL UNIT,QTZ:10.000MHZ,+/-0.001 %,PARALLEL	80009	158-0356-00
A26Y417	158-0477-00	B023248		XTAL UNIT,QTZ:10.000MHZ,+/-15PPM,SERIES	80009	158-0477-00
A26Y426	158-0356-00	B010100	B023247	XTAL UNIT,QTZ:10.000MHZ,+/-0.001 %,PARALLEL	80009	158-0356-00
A26Y426	158-0477-00	B023248		XTAL UNIT,QTZ:10.000MHZ,+/-15PPM,SERIES	80009	158-0477-00
A26Y446	158-0356-00	B010100	B023247	XTAL UNIT,QTZ:10.000MHZ,+/-0.001 %,PARALLEL	80009	158-0356-00
A26Y446	158-0477-00	B023248		XTAL UNIT,QTZ:10.000MHZ,+/-15PPM,SERIES	80009	158-0477-00
A26Y458	158-0356-00	B010100	B023247	XTAL UNIT,QTZ:10.000MHZ,+/-0.001 %,PARALLEL	80009	158-0356-00
A26Y458	158-0477-00	B023248		XTAL UNIT,QTZ:10.000MHZ,+/-15PPM,SERIES	80009	158-0477-00
A27	671-2004-00	B010100	B010185	CIRCUIT BD ASSY:LOG	80009	671-2004-00
A27	671-2004-01	B010186	B011344	CIRCUIT BD ASSY:LOG	80009	671-2004-01
A27	671-2004-02	B011345		CIRCUIT BD ASSY:LOG (OPTION 12 ONLY)	80009	671-2004-02
A27C100	283-5004-00			CAP,FXD,CER DI:0.1UF,10%,25V	80009	283-5004-00
A27C101	283-5004-00			CAP,FXD,CER DI:0.1UF,10%,25V	80009	283-5004-00
A27C102	283-5004-00			CAP,FXD,CER DI:0.1UF,10%,25V	80009	283-5004-00
A27C103	283-5004-00			CAP,FXD,CER DI:0.1UF,10%,25V	80009	283-5004-00
A27C110	283-5004-00			CAP,FXD,CER DI:0.1UF,10%,25V	80009	283-5004-00
A27C111	283-5016-00			CAP,FXD,CER DI:1UF,10%,50V	80009	283-5016-00
A27C120	283-5004-00			CAP,FXD,CER DI:0.1UF,10%,25V	80009	283-5004-00
A27C130	283-5002-00			CAP,FXD,CER DI:1000PF,10%,50V	80009	283-5002-00
A27C170	283-5004-00			CAP,FXD,CER DI:0.1UF,10%,25V	80009	283-5004-00
A27C171	283-5004-00			CAP,FXD,CER DI:0.1UF,10%,25V	80009	283-5004-00
A27C190	283-5004-00			CAP,FXD,CER DI:0.1UF,10%,25V	80009	283-5004-00
A27C191	283-5004-00			CAP,FXD,CER DI:0.1UF,10%,25V	80009	283-5004-00
A27C200	283-5016-00			CAP,FXD,CER DI:1UF,10%,50V	80009	283-5016-00
A27C210	283-5016-00			CAP,FXD,CER DI:1UF,10%,50V	80009	283-5016-00
A27C211	283-5004-00			CAP,FXD,CER DI:0.1UF,10%,25V	80009	283-5004-00

Component No.	Tektronix Part No.	Serial/Assembly No. Effective	Dscont	Name & Description	Mfr. Code	Mfr. Part No.
A27C212	283-5002-00			CAP,FXD,CER DI:1000PF,10%,50V	80009	283-5002-00
A27C213	283-5004-00			CAP,FXD,CER DI:0.1UF,10%,25V	80009	283-5004-00
A27C230	283-5004-00			CAP,FXD,CER DI:0.1UF,10%,25V	80009	283-5004-00
A27C231	283-5004-00			CAP,FXD,CER DI:0.1UF,10%,25V	80009	283-5004-00
A27C232	283-5004-00			CAP,FXD,CER DI:0.1UF,10%,25V	80009	283-5004-00
A27C233	283-5004-00			CAP,FXD,CER DI:0.1UF,10%,25V	80009	283-5004-00
A27C240	283-5004-00			CAP,FXD,CER DI:0.1UF,10%,25V	80009	283-5004-00
A27C241	283-5002-00			CAP,FXD,CER DI:1000PF,10%,50V	80009	283-5002-00
A27C242	283-5002-00			CAP,FXD,CER DI:1000PF,10%,50V	80009	283-5002-00
A27C243	283-5014-00			CAP,FXD,CER DI:330PF,5%,50V	80009	283-5014-00
A27C250	283-5025-00			CAP,FXD,CER DI:220PF,5%,50V	80009	283-5025-00
A27C251	283-5004-00			CAP,FXD,CER DI:0.1UF,10%,25V	80009	283-5004-00
A27C252	283-5004-00			CAP,FXD,CER DI:0.1UF,10%,25V	80009	283-5004-00
A27C253	283-5004-00			CAP,FXD,CER DI:0.1UF,10%,25V	80009	283-5004-00
A27C254	283-5004-00			CAP,FXD,CER DI:0.1UF,10%,25V	80009	283-5004-00
A27C260	283-5004-00			CAP,FXD,CER DI:0.1UF,10%,25V	80009	283-5004-00
A27C270	283-5004-00			CAP,FXD,CER DI:0.1UF,10%,25V	80009	283-5004-00
A27C280	281-0298-00			CAP,VAR,CER DI:6-50PF	51406	TZ03Z500YR
A27C281	283-5004-00			CAP,FXD,CER DI:0.1UF,10%,25V	80009	283-5004-00
A27C282	283-5004-00			CAP,FXD,CER DI:0.1UF,10%,25V	80009	283-5004-00
A27C283	283-5004-00			CAP,FXD,CER DI:0.1UF,10%,25V	80009	283-5004-00
A27C290	283-5004-00			CAP,FXD,CER DI:0.1UF,10%,25V	80009	283-5004-00
A27C291	283-5004-00			CAP,FXD,CER DI:0.1UF,10%,25V	80009	283-5004-00
A27C292	283-5004-00			CAP,FXD,CER DI:0.1UF,10%,25V	80009	283-5004-00
A27C300	283-5004-00			CAP,FXD,CER DI:0.1UF,10%,25V	80009	283-5004-00
A27C301	283-5004-00			CAP,FXD,CER DI:0.1UF,10%,25V	80009	283-5004-00
A27C302	283-5001-00			CAP,FXD,CER DI:100PF,5%,50V	80009	283-5001-00
A27C320	283-5004-00			CAP,FXD,CER DI:0.1UF,10%,25V	80009	283-5004-00
A27C321	283-5004-00			CAP,FXD,CER DI:0.1UF,10%,25V	80009	283-5004-00
A27C322	283-5004-00			CAP,FXD,CER DI:0.1UF,10%,25V	80009	283-5004-00
A27C330	283-5004-00			CAP,FXD,CER DI:0.1UF,10%,25V	80009	283-5004-00
A27C340	283-5004-00			CAP,FXD,CER DI:0.1UF,10%,25V	80009	283-5004-00
A27C350	283-5004-00			CAP,FXD,CER DI:0.1UF,10%,25V	80009	283-5004-00
A27C351	283-5004-00			CAP,FXD,CER DI:0.1UF,10%,25V	80009	283-5004-00
A27C352	283-5004-00			CAP,FXD,CER DI:0.1UF,10%,25V	80009	283-5004-00
A27C353	283-5000-00			CAP,FXD,CER DI:10PF,5%,50V	80009	283-5000-00
A27C354	283-5011-00			CAP,FXD,CER DI:33PF,5%,50V	95275	VJ1206A330JXA
A27C355	283-5011-00			CAP,FXD,CER DI:33PF,5%,50V	95275	VJ1206A330JXA
A27C356	283-5001-00			CAP,FXD,CER DI:100PF,5%,50V	80009	283-5001-00
A27C357	281-0298-00			CAP,VAR,CER DI:6-50PF	51406	TZ03Z500YR
A27C360	290-0943-00			CAP,FXD,ELCTLT:47UF,+50-20%,25V	55680	UVX1V470MPA
A27C370	283-5004-00			CAP,FXD,CER DI:0.1UF,10%,25V	80009	283-5004-00
A27C380	283-5025-00			CAP,FXD,CER DI:220PF,5%,50V	80009	283-5025-00
A27C381	283-5001-00			CAP,FXD,CER DI:100PF,5%,50V	80009	283-5001-00
A27C382	283-5027-00			CAP,FXD,CER DI:470PF,5%,50V	54583	
A27C383	283-5022-00			CAP,FXD,CER DI:47PF,5%,50V	54583	
A27C384	283-5049-00			CAP,FXD,CER DI:180PF,5%,50V	95275	VJ1206A181JXA
A27C385	283-5011-00			CAP,FXD,CER DI:33PF,5%,50V	95275	VJ1206A330JXA
A27C386	283-5004-00			CAP,FXD,CER DI:0.1UF,10%,25V	80009	283-5004-00
A27C387	283-5011-00			CAP,FXD,CER DI:33PF,5%,50V	95275	VJ1206A330JXA
A27C390	283-5004-00			CAP,FXD,CER DI:0.1UF,10%,25V	80009	283-5004-00
A27C391	283-5004-00			CAP,FXD,CER DI:0.1UF,10%,25V	80009	283-5004-00
A27C392	281-0298-00			CAP,VAR,CER DI:6-50PF	51406	TZ03Z500YR
A27C400	283-5004-00			CAP,FXD,CER DI:0.1UF,10%,25V	80009	283-5004-00
A27C401	283-5004-00			CAP,FXD,CER DI:0.1UF,10%,25V	80009	283-5004-00
A27C402	283-5004-00			CAP,FXD,CER DI:0.1UF,10%,25V	80009	283-5004-00
A27C403	283-5004-00			CAP,FXD,CER DI:0.1UF,10%,25V	80009	283-5004-00
A27C404	283-5004-00			CAP,FXD,CER DI:0.1UF,10%,25V	80009	283-5004-00
A27C440	283-5004-00			CAP,FXD,CER DI:0.1UF,10%,25V	80009	283-5004-00

Component No.	Tektronix Part No.	Serial/Assembly No. Effective	Dscont	Name & Description	Mfr. Code	Mfr. Part No.
A27C441	283-5004-00			CAP,FXD,CER DI:0.1UF,10%,25V	80009	283-5004-00
A27C442	283-5004-00			CAP,FXD,CER DI:0.1UF,10%,25V	80009	283-5004-00
A27C450	283-5004-00			CAP,FXD,CER DI:0.1UF,10%,25V	80009	283-5004-00
A27C460	283-5004-00			CAP,FXD,CER DI:0.1UF,10%,25V	80009	283-5004-00
A27C462	290-0944-00			CAP,FXD,ELCTLT:220UF,+50-20%,10V	55680	UVX1C221MPA
A27C470	283-5004-00			CAP,FXD,CER DI:0.1UF,10%,25V	80009	283-5004-00
A27C471	290-0944-00			CAP,FXD,ELCTLT:220UF,+50-20%,10V	55680	UVX1C221MPA
A27C480	283-5004-00			CAP,FXD,CER DI:0.1UF,10%,25V	80009	283-5004-00
A27C481	283-5004-00			CAP,FXD,CER DI:0.1UF,10%,25V	80009	283-5004-00
A27C500	283-5004-00			CAP,FXD,CER DI:0.1UF,10%,25V	80009	283-5004-00
A27C501	283-5004-00			CAP,FXD,CER DI:0.1UF,10%,25V	80009	283-5004-00
A27C502	283-5004-00			CAP,FXD,CER DI:0.1UF,10%,25V	80009	283-5004-00
A27C510	283-5016-00			CAP,FXD,CER DI:1UF,10%,50V	80009	283-5016-00
A27C511	283-5002-00			CAP,FXD,CER DI:1000PF,10%,50V	80009	283-5002-00
A27C512	283-5022-00			CAP,FXD,CER DI:47PF,5%,50V	54583	
A27C513	283-5003-00			CAP,FXD,CER DI:0.01UF,10%,50V	80009	283-5003-00
A27C520	283-5004-00			CAP,FXD,CER DI:0.1UF,10%,25V	80009	283-5004-00
A27C521	283-5004-00			CAP,FXD,CER DI:0.1UF,10%,25V	80009	283-5004-00
A27C530	283-5004-00			CAP,FXD,CER DI:0.1UF,10%,25V	80009	283-5004-00
A27C531	283-5004-00			CAP,FXD,CER DI:0.1UF,10%,25V	80009	283-5004-00
A27C540	283-5004-00			CAP,FXD,CER DI:0.1UF,10%,25V	80009	283-5004-00
A27C550	283-5004-00			CAP,FXD,CER DI:0.1UF,10%,25V	80009	283-5004-00
A27C551	283-5004-00			CAP,FXD,CER DI:0.1UF,10%,25V	80009	283-5004-00
A27C560	290-0804-00			CAP,FXD,ELCTLT:10UF,+50-20%,25V	80009	290-0804-00
A27C570	290-0804-00			CAP,FXD,ELCTLT:10UF,+50-20%,25V	80009	290-0804-00
A27C571	283-5004-00			CAP,FXD,CER DI:0.1UF,10%,25V	80009	283-5004-00
A27C572	283-5003-00			CAP,FXD,CER DI:0.01UF,10%,50V	80009	283-5003-00
A27C573	283-5004-00			CAP,FXD,CER DI:0.1UF,10%,25V	80009	283-5004-00
A27C580	283-5004-00			CAP,FXD,CER DI:0.1UF,10%,25V	80009	283-5004-00
A27C581	283-5004-00			CAP,FXD,CER DI:0.1UF,10%,25V	80009	283-5004-00
A27C582	283-5004-00			CAP,FXD,CER DI:0.1UF,10%,25V	80009	283-5004-00
A27C590	283-5004-00			CAP,FXD,CER DI:0.1UF,10%,25V	80009	283-5004-00
A27C591	283-5004-00			CAP,FXD,CER DI:0.1UF,10%,25V	80009	283-5004-00
A27C600	283-5004-00			CAP,FXD,CER DI:0.1UF,10%,25V	80009	283-5004-00
A27C610	283-5001-00			CAP,FXD,CER DI:100PF,5%,50V	80009	283-5001-00
A27C611	283-5001-00			CAP,FXD,CER DI:100PF,5%,50V	80009	283-5001-00
A27C612	283-5014-00			CAP,FXD,CER DI:330PF,5%,50V	80009	283-5014-00
A27C613	283-5009-00			CAP,FXD,CER DI:15PF,5%,50V	54583	C3216C0G1H150J
A27C614	283-5025-00			CAP,FXD,CER DI:220PF,5%,50V	80009	283-5025-00
A27C615	283-5011-00			CAP,FXD,CER DI:33PF,5%,50V	95275	VJ1206A330JXA
A27C620	283-5004-00			CAP,FXD,CER DI:0.1UF,10%,25V	80009	283-5004-00
A27C640	283-5004-00			CAP,FXD,CER DI:0.1UF,10%,25V	80009	283-5004-00
A27C641	283-5004-00			CAP,FXD,CER DI:0.1UF,10%,25V	80009	283-5004-00
A27C642	283-5004-00			CAP,FXD,CER DI:0.1UF,10%,25V	80009	283-5004-00
A27C650	283-5004-00			CAP,FXD,CER DI:0.1UF,10%,25V	80009	283-5004-00
A27C651	283-5004-00			CAP,FXD,CER DI:0.1UF,10%,25V	80009	283-5004-00
A27C660	283-5002-00			CAP,FXD,CER DI:1000PF,10%,50V	80009	283-5002-00
A27C661	283-5002-00			CAP,FXD,CER DI:1000PF,10%,50V	80009	283-5002-00
A27C662	283-5004-00			CAP,FXD,CER DI:0.1UF,10%,25V	80009	283-5004-00
A27C663	283-5004-00			CAP,FXD,CER DI:0.1UF,10%,25V	80009	283-5004-00
A27C664	283-5004-00			CAP,FXD,CER DI:0.1UF,10%,25V	80009	283-5004-00
A27C665	283-5004-00			CAP,FXD,CER DI:0.1UF,10%,25V	80009	283-5004-00
A27C666	283-5004-00			CAP,FXD,CER DI:0.1UF,10%,25V	80009	283-5004-00
A27C670	283-5004-00			CAP,FXD,CER DI:0.1UF,10%,25V	80009	283-5004-00
A27C671	283-5004-00			CAP,FXD,CER DI:0.1UF,10%,25V	80009	283-5004-00
A27C680	283-5004-00			CAP,FXD,CER DI:0.1UF,10%,25V	80009	283-5004-00
A27C681	290-0944-00			CAP,FXD,ELCTLT:220UF,+50-20%,10V	55680	UVX1C221MPA
A27C690	290-0944-00			CAP,FXD,ELCTLT:220UF,+50-20%,10V	55680	UVX1C221MPA
A27C710	283-5004-00			CAP,FXD,CER DI:0.1UF,10%,25V	80009	283-5004-00

Component No.	Tektronix Part No.	Serial/Assembly No. Effective	Dscont	Name & Description	Mfr. Code	Mfr. Part No.
A27C730	283-5004-00			CAP,FXD,CER DI:0.1UF,10%,25V	80009	283-5004-00
A27C731	283-5002-00			CAP,FXD,CER DI:1000PF,10%,50V	80009	283-5002-00
A27C732	283-5002-00			CAP,FXD,CER DI:1000PF,10%,50V	80009	283-5002-00
A27C740	283-5004-00			CAP,FXD,CER DI:0.1UF,10%,25V	80009	283-5004-00
A27C741	283-5004-00			CAP,FXD,CER DI:0.1UF,10%,25V	80009	283-5004-00
A27C742	283-5004-00			CAP,FXD,CER DI:0.1UF,10%,25V	80009	283-5004-00
A27C750	283-5027-00			CAP,FXD,CER DI:470PF,5%,50V	54583	
A27C751	283-5004-00			CAP,FXD,CER DI:0.1UF,10%,25V	80009	283-5004-00
A27C752	283-5004-00			CAP,FXD,CER DI:0.1UF,10%,25V	80009	283-5004-00
A27C760	283-5002-00			CAP,FXD,CER DI:1000PF,10%,50V	80009	283-5002-00
A27C761	283-5004-00			CAP,FXD,CER DI:0.1UF,10%,25V	80009	283-5004-00
A27C762	283-5001-00			CAP,FXD,CER DI:100PF,5%,50V	80009	283-5001-00
A27CR290	152-5043-00			SEMICOND DVC,DI:PIN,SI,100V,2.5 OHM,0.35PF, 0.35PF,SOT-23,HSMP-3802	80009	152-5043-00
A27CR291	152-5043-00			SEMICOND DVC,DI:PIN,SI,100V,2.5 OHM,0.35PF, 0.35PF,SOT-23,HSMP-3802	80009	152-5043-00
A27CR300	152-0324-00			DIODE,SIG:,;50V,1.1VF,225MA,50PA,3.7PF,1.0US;MT5128,D0-35,T&R	14552	MT5128
A27CR420	152-5004-00			DIODE,SIG:,ULTRA FAST;70V,0.15A,6NS,SER-PAIR;BAV99,SOT-23,8MM TR	25088	BAV99T
A27CR490	152-5004-00			DIODE,SIG:,ULTRA FAST;70V,0.15A,6NS,SER-PAIR;BAV99,SOT-23,8MM TR	25088	BAV99T
A27CR520	152-5004-00			DIODE,SIG:,ULTRA FAST;70V,0.15A,6NS,SER-PAIR;BAV99,SOT-23,8MM TR	25088	BAV99T
A27CR620	152-5004-00			DIODE,SIG:,ULTRA FAST;70V,0.15A,6NS,SER-PAIR;BAV99,SOT-23,8MM TR	25088	BAV99T
A27CR720	152-5004-00			DIODE,SIG:,ULTRA FAST;70V,0.15A,6NS,SER-PAIR;BAV99,SOT-23,8MM TR	25088	BAV99T
A27J1	131-3199-00			BUS,CONDUCTOR:SHUNT,;FEMALE,1 X 2,0.1 CTR,0.200 H,LOW PROFILE,JUMPER;,,	22526	76264-101
A27J7	131-3556-00			CONN,RCPT,ELEC:CARD CONN,2 X 12,HORIZ	22526	66527-012
A27J110	131-1857-00			CONN,HDR:PCB,;MALE,STR,1 X 36,0.1 CTR,0.230 MLG X 0.100 TAIL,GOLD;,,	58050	082-3644-SS10
A27J111	131-1857-00			CONN,HDR:PCB,;MALE,STR,1 X 36,0.1 CTR,0.230 MLG X 0.100 TAIL,GOLD;,,	58050	082-3644-SS10
A27J160	131-0391-01			CONN,RF JACK:	80009	131-0391-01
A27J190	131-0391-01			CONN,RF JACK:	80009	131-0391-01
A27J260	131-0391-01			CONN,RF JACK:	80009	131-0391-01
A27J360	131-1425-00			CONN,HDR:PCB,;MALE,RTANG,1 X 36,0.1 CTR,0.230 MLG X 0.090 TAIL,30 GOLD,STACKABLE;,,	22526	65521-136
A27J570	131-1857-00			CONN,HDR:PCB,;MALE,STR,1 X 36,0.1 CTR,0.230 MLG X 0.100 TAIL,GOLD;,,	58050	082-3644-SS10
A27L140	108-5069-00			COIL,RF:FXD,120UH,5%	80009	108-5069-00
A27L350	108-5037-00			COIL,RF:INDUCTOR,;22UH,10%,50 @ 2.52MHZ,SRF =20MHZ,DCR=3.2 OHMS,IDC=180;SMD, 12MM T&R	54583	NL453232T-220K
A27L351	108-5093-00			COIL,RF:	02113	1812LS-222 XKBA
A27L380	108-5046-00			COIL,RF:	80009	108-5046-00
A27L381	108-5046-00			COIL,RF:	80009	108-5046-00
A27L440	108-5037-00			COIL,RF:INDUCTOR,;22UH,10%,50 @ 2.52MHZ,SRF =20MHZ,DCR=3.2 OHMS,IDC=180;SMD, 12MM T&R	54583	NL453232T-220K
A27L441	108-5037-00			COIL,RF:INDUCTOR,;22UH,10%,50 @ 2.52MHZ,SRF =20MHZ,DCR=3.2 OHMS,IDC=180;SMD, 12MM T&R	54583	NL453232T-220K
A27L610	108-5018-00			COIL,RF:FXD,4.7UH,20%, Q=50, SRF 45 MHZ, DCR 1.0 OHM, I MAX	80009	108-5018-00
A27L611	108-5051-00			COIL,RF:FXD,10UH,10%, Q=50,SRF 20 MHZ, DCR 1.6 OHM,I MAX 250MASMD, 12 MM TAPED & REELED	54583	NL453232-100K
A27L612	108-5010-00			COIL,RF:	80009	108-5010-00

Component No.	Tektronix Part No.	Serial/Assembly No. Effective	Dscont	Name & Description	Mfr. Code	Mfr. Part No.
A27L680	108-1262-00			COIL,RF:FXD,100UH,10%,Q=30,SRF 8.2MHZ,DCR 0 .23 OHM,I MAX 0.75ARADIAL LEAD	80009	108-1262-00
A27L690	108-1262-00			COIL,RF:FXD,100UH,10%,Q=30,SRF 8.2MHZ,DCR 0 .23 OHM,I MAX 0.75ARADIAL LEAD	80009	108-1262-00
A27L760	108-5049-00			COIL,RF:	02113	1008CS-821-05
A27Q170	151-5001-00			TRANSISTOR,SIG:BIPOLAR,NPN;40V,200MA,300MHZ ,AMPLIFIER;MMBT3904L,TO-236/SOT-23,8MM T&R	80009	151-5001-00
A27Q220	156-6140-00			IC,LINEAR:BIPOLAR,TRANSISTOR ARRAY;QUAD,NPN ,INDEPENDENT,MATCHED;MAT04FS,SO14.150,TUBE	80009	156-6140-00
A27Q310	151-5000-00			TRANSISTOR,SIG:BIPOLAR,PNP;40V,200MA,250MHZ ,AMPLIFIER;MMBT3906L,TO-236/SOT-23,8MM T&R	04713	MMBT3906LT1
A27Q311	151-5000-00			TRANSISTOR,SIG:BIPOLAR,PNP;40V,200MA,250MHZ ,AMPLIFIER;MMBT3906L,TO-236/SOT-23,8MM T&R	04713	MMBT3906LT1
A27Q312	151-5000-00			TRANSISTOR,SIG:BIPOLAR,PNP;40V,200MA,250MHZ ,AMPLIFIER;MMBT3906L,TO-236/SOT-23,8MM T&R	04713	MMBT3906LT1
A27Q313	151-5000-00			TRANSISTOR,SIG:BIPOLAR,PNP;40V,200MA,250MHZ ,AMPLIFIER;MMBT3906L,TO-236/SOT-23,8MM T&R	04713	MMBT3906LT1
A27Q330	151-5000-00			TRANSISTOR,SIG:BIPOLAR,PNP;40V,200MA,250MHZ ,AMPLIFIER;MMBT3906L,TO-236/SOT-23,8MM T&R	04713	MMBT3906LT1
A27Q340	151-5001-00			TRANSISTOR,SIG:BIPOLAR,NPN;40V,200MA,300MHZ ,AMPLIFIER;MMBT3904L,TO-236/SOT-23,8MM T&R	80009	151-5001-00
A27Q420	151-5001-00			TRANSISTOR,SIG:BIPOLAR,NPN;40V,200MA,300MHZ ,AMPLIFIER;MMBT3904L,TO-236/SOT-23,8MM T&R	80009	151-5001-00
A27Q421	151-5000-00			TRANSISTOR,SIG:BIPOLAR,PNP;40V,200MA,250MHZ ,AMPLIFIER;MMBT3906L,TO-236/SOT-23,8MM T&R	04713	MMBT3906LT1
A27Q460	151-5001-00			TRANSISTOR,SIG:BIPOLAR,NPN;40V,200MA,300MHZ ,AMPLIFIER;MMBT3904L,TO-236/SOT-23,8MM T&R	80009	151-5001-00
A27Q590	151-5001-00			TRANSISTOR,SIG:BIPOLAR,NPN;40V,200MA,300MHZ ,AMPLIFIER;MMBT3904L,TO-236/SOT-23,8MM T&R	80009	151-5001-00
A27Q600	151-5000-00			TRANSISTOR,SIG:BIPOLAR,PNP;40V,200MA,250MHZ ,AMPLIFIER;MMBT3906L,TO-236/SOT-23,8MM T&R	04713	MMBT3906LT1
A27R100	321-5030-00			RES,FXD:METAL FILM;10.0K OHM,1%,0.125W,TC=1 00 PPM;1206,T&R	80009	321-5030-00
A27R101	321-5020-00			RES,FXD:METAL FILM;1.5K OHM,1%,0.125W,TC=10 0 PPM;1206,T&R	80009	321-5020-00
A27R102	321-5039-00			RES,FXD:METAL FILM;56.2K OHM,1%,0.125W,TC=1 00 PPM;1206,T&R	80009	321-5039-00
A27R103	321-5039-00			RES,FXD:METAL FILM;56.2K OHM,1%,0.125W,TC=1 00 PPM;1206,T&R	80009	321-5039-00
A27R110	321-5041-00			RES,FXD:METAL FILM;82.5K OHM,1%,0.125W,TC=1 00 PPM;1206,T&R	80009	321-5041-00
A27R112	311-1245-00			RES,VAR,NONWW:TRMR,10K OHM,0.5W	80009	311-1245-00
A27R113	321-5030-00			RES,FXD:METAL FILM;10.0K OHM,1%,0.125W,TC=1 00 PPM;1206,T&R	80009	321-5030-00
A27R114	311-1239-00			RES,VAR,TRMR:CERMET;2.5K OHM,10%,0.5W,0.375 SQ,SIDE ADJUST	80009	311-1239-00
A27R115	321-5030-00			RES,FXD:METAL FILM;10.0K OHM,1%,0.125W,TC=1 00 PPM;1206,T&R	80009	321-5030-00
A27R116	321-5020-00			RES,FXD:METAL FILM;1.5K OHM,1%,0.125W,TC=10 0 PPM;1206,T&R	80009	321-5020-00
A27R120	321-5025-00			RES,FXD:METAL FILM;3.92K OHM,1%,0.125W,TC=1 00 PPM;1206,T&R	80009	321-5025-00
A27R121	321-5030-00			RES,FXD:METAL FILM;10.0K OHM,1%,0.125W,TC=1 00 PPM;1206,T&R	80009	321-5030-00
A27R122	321-5049-00			RES,FXD:METAL FILM;1M OHM,1%,0.125W,TC=100 PPM;1206,T&R	80009	321-5049-00
A27R123	321-5014-00			RES,FXD:METAL FILM;475 OHM,1%,0.125W,TC=100 PPM;1206,T&R	80009	321-5014-00

Component No.	Tektronix Part No.	Serial/Assembly No. Effective	Dscont	Name & Description	Mfr. Code	Mfr. Part No.
A27R124	321-5019-00			RES,FXD:METAL FILM;1.21K OHM,1%,0.125W,TC=100 PPM;1206,T&R	80009	321-5019-00
A27R125	321-5025-00			RES,FXD:METAL FILM;3.92K OHM,1%,0.125W,TC=100 PPM;1206,T&R	80009	321-5025-00
A27R126	321-5018-00			RES,FXD:METAL FILM;1.0K OHM,1%,0.125W,TC=100 PPM;1206,T&R	80009	321-5018-00
A27R127	321-5022-00			RES,FXD:METAL FILM;2.21K OHM,1%,0.125W,TC=100 PPM;1206,T&R	80009	321-5022-00
A27R128	321-5022-00			RES,FXD:METAL FILM;2.21K OHM,1%,0.125W,TC=100 PPM;1206,T&R	80009	321-5022-00
A27R129	321-5014-00			RES,FXD:METAL FILM;475 OHM,1%,0.125W,TC=100 PPM;1206,T&R	80009	321-5014-00
A27R130	321-5014-00			RES,FXD:METAL FILM;475 OHM,1%,0.125W,TC=100 PPM;1206,T&R	80009	321-5014-00
A27R131	321-5014-00			RES,FXD:METAL FILM;475 OHM,1%,0.125W,TC=100 PPM;1206,T&R	80009	321-5014-00
A27R132	321-5016-00			RES,FXD:METAL FILM;681 OHM,1%,0.125W,TC=100 PPM;1206,T&R	01121	BCK6810FT
A27R133	321-5029-00			RES,FXD:METAL FILM;8.25K OHM,1%,0.125W,TC=100 PPM;1206,T&R	80009	321-5029-00
A27R134	311-1237-00			RES,VAR,NONWW:1K OHM,10%,0.50W	80009	311-1237-00
A27R135	321-5048-00			RES,FXD:METAL FILM;332K OHM,1%,0.125W,TC=100 PPM;1206,T&R	80009	321-5048-00
A27R140	311-1245-00			RES,VAR,NONWW:TRMR,10K OHM,0.5W	80009	311-1245-00
A27R141	311-1245-00			RES,VAR,NONWW:TRMR,10K OHM,0.5W	80009	311-1245-00
A27R142	311-1245-00	B010100	B010185	RES,VAR,NONWW:TRMR,10K OHM,0.5W	80009	311-1245-00
A27R142	311-1198-00	B010186		RES,VAR,NONWW:TRMR,20K OHM,0.5W	80009	311-1198-00
A27R143	321-5030-00			RES,FXD:METAL FILM;10.0K OHM,1%,0.125W,TC=100 PPM;1206,T&R	80009	321-5030-00
A27R150	321-5015-00			RES,FXD:METAL FILM;562 OHM,1%,0.125W,TC=100 PPM;1206,T&R	80009	321-5015-00
A27R151	321-5030-00			RES,FXD:METAL FILM;10.0K OHM,1%,0.125W,TC=100 PPM;1206,T&R	80009	321-5030-00
A27R152	321-5051-00			RES,FXD:METAL FILM;0 OHM,1%,0.125W,TC=100 PPM;1206,T&R	80009	321-5051-00
A27R153	311-1239-00			RES,VAR,TRMR:CERMET;2.5K OHM,10%,0.5W,0.375 SQ,SIDE ADJUST	80009	311-1239-00
A27R160	311-1245-00			RES,VAR,NONWW:TRMR,10K OHM,0.5W	80009	311-1245-00
A27R170	321-5006-00			RES,FXD:METAL FILM;100 OHM,1%,0.125W,TC=100 PPM;1206,T&R	80009	321-5006-00
A27R171	321-5018-00			RES,FXD:METAL FILM;1.0K OHM,1%,0.125W,TC=100 PPM;1206,T&R	80009	321-5018-00
A27R172	311-1245-00			RES,VAR,NONWW:TRMR,10K OHM,0.5W	80009	311-1245-00
A27R180	321-5014-00			RES,FXD:METAL FILM;475 OHM,1%,0.125W,TC=100 PPM;1206,T&R	80009	321-5014-00
A27R181	321-5022-00			RES,FXD:METAL FILM;2.21K OHM,1%,0.125W,TC=100 PPM;1206,T&R	80009	321-5022-00
A27R182	321-5022-00			RES,FXD:METAL FILM;2.21K OHM,1%,0.125W,TC=100 PPM;1206,T&R	80009	321-5022-00
A27R183	321-5023-00			RES,FXD:METAL FILM;2.74K OHM,1%,0.125W,TC=100 PPM;1206,T&R	80009	321-5023-00
A27R200	321-5020-00			RES,FXD:METAL FILM;1.5K OHM,1%,0.125W,TC=100 PPM;1206,T&R	80009	321-5020-00
A27R201	321-5041-00			RES,FXD:METAL FILM;82.5K OHM,1%,0.125W,TC=100 PPM;1206,T&R	80009	321-5041-00
A27R202	321-5030-00			RES,FXD:METAL FILM;10.0K OHM,1%,0.125W,TC=100 PPM;1206,T&R	80009	321-5030-00
A27R203	321-5038-00			RES,FXD:METAL FILM;47.5K OHM,1%,0.125W,TC=100 PPM;1206,T&R	80009	321-5038-00

Component No.	Tektronix Part No.	Serial/Assembly No. Effective	Dscont	Name & Description	Mfr. Code	Mfr. Part No.
A27R204	321-5039-00			RES,FXD:METAL FILM;56.2K OHM,1%,0.125W,TC=100 PPM;1206,T&R	80009	321-5039-00
A27R205	321-5047-00			RES,FXD:METAL FILM;100K OHM,1%,0.125W,TC=100 PPM;1206,T&R	80009	321-5047-00
A27R210	321-5014-00			RES,FXD:METAL FILM;475 OHM,1%,0.125W,TC=100 PPM;1206,T&R	80009	321-5014-00
A27R220	321-5049-00			RES,FXD:METAL FILM;1M OHM,1%,0.125W,TC=100 PPM;1206,T&R	80009	321-5049-00
A27R221	321-5020-00			RES,FXD:METAL FILM;1.5K OHM,1%,0.125W,TC=100 PPM;1206,T&R	80009	321-5020-00
A27R222	321-5025-00			RES,FXD:METAL FILM;3.92K OHM,1%,0.125W,TC=100 PPM;1206,T&R	80009	321-5025-00
A27R230	321-5020-00			RES,FXD:METAL FILM;1.5K OHM,1%,0.125W,TC=100 PPM;1206,T&R	80009	321-5020-00
A27R240	321-5036-00			RES,FXD:METAL FILM;33.2K OHM,1%,0.125W,TC=100 PPM;1206,T&R	80009	321-5036-00
A27R241	321-5047-00			RES,FXD:METAL FILM;100K OHM,1%,0.125W,TC=100 PPM;1206,T&R	80009	321-5047-00
A27R243	321-5047-00			RES,FXD:METAL FILM;100K OHM,1%,0.125W,TC=100 PPM;1206,T&R	80009	321-5047-00
A27R250	321-5013-00			RES,FXD:METAL FILM;392 OHM,1%,0.125W,TC=100 PPM;1206,T&R	80009	321-5013-00
A27R251	321-5006-00			RES,FXD:METAL FILM;100 OHM,1%,0.125W,TC=100 PPM;1206,T&R	80009	321-5006-00
A27R252	321-5015-00			RES,FXD:METAL FILM;562 OHM,1%,0.125W,TC=100 PPM;1206,T&R	80009	321-5015-00
A27R253	321-5006-00			RES,FXD:METAL FILM;100 OHM,1%,0.125W,TC=100 PPM;1206,T&R	80009	321-5006-00
A27R254	321-5034-00			RES,FXD:METAL FILM;22.1K OHM,1%,0.125W,TC=100 PPM;1206,T&R	80009	321-5034-00
A27R255	321-5034-00			RES,FXD:METAL FILM;22.1K OHM,1%,0.125W,TC=100 PPM;1206,T&R	80009	321-5034-00
A27R256	321-5018-00			RES,FXD:METAL FILM;1.0K OHM,1%,0.125W,TC=100 PPM;1206,T&R	80009	321-5018-00
A27R260	321-5014-00			RES,FXD:METAL FILM;475 OHM,1%,0.125W,TC=100 PPM;1206,T&R	80009	321-5014-00
A27R261	321-5050-00			RES,FXD:METAL FILM;33.2 OHM,1%,0.125W,TC=100 PPM;1206,T&R	57668	MCR18FWEA33E2
A27R262	321-5014-00			RES,FXD:METAL FILM;475 OHM,1%,0.125W,TC=100 PPM;1206,T&R	80009	321-5014-00
A27R270	321-5022-00			RES,FXD:METAL FILM;2.21K OHM,1%,0.125W,TC=100 PPM;1206,T&R	80009	321-5022-00
A27R271	321-5014-00			RES,FXD:METAL FILM;475 OHM,1%,0.125W,TC=100 PPM;1206,T&R	80009	321-5014-00
A27R272	321-5006-00			RES,FXD:METAL FILM;100 OHM,1%,0.125W,TC=100 PPM;1206,T&R	80009	321-5006-00
A27R280	321-5000-00			RES,FXD:METAL FILM;10 OHM,1%,0.125W,TC=100 PPM;1206,T&R	57668	MCR18EZHFW10E
A27R281	321-5006-00			RES,FXD:METAL FILM;100 OHM,1%,0.125W,TC=100 PPM;1206,T&R	80009	321-5006-00
A27R282	321-5019-00			RES,FXD:METAL FILM;1.21K OHM,1%,0.125W,TC=100 PPM;1206,T&R	80009	321-5019-00
A27R283	321-5004-00			RES,FXD:METAL FILM;22.1 OHM,1%,0.125W,TC=100 PPM;1206,T&R	80009	321-5004-00
A27R284	321-5023-00			RES,FXD:METAL FILM;2.74K OHM,1%,0.125W,TC=100 PPM;1206,T&R	80009	321-5023-00
A27R285	321-5010-00			RES,FXD:METAL FILM;221 OHM,1%,0.125W,TC=100 PPM;1206,T&R	80009	321-5010-00

Component No.	Tektronix Part No.	Serial/Assembly No. Effective	Dscont	Name & Description	Mfr. Code	Mfr. Part No.
A27R290	321-5000-00			RES,FXD:METAL FILM;10 OHM,1%,0.125W,TC=100 PPM;1206,T&R	57668	MCR18EZHFW10E
A27R291	321-5051-00			RES,FXD:METAL FILM;0 OHM,1%,0.125W,TC=100 PPM;1206,T&R	80009	321-5051-00
A27R292	321-5051-00			RES,FXD:METAL FILM;0 OHM,1%,0.125W,TC=100 PPM;1206,T&R	80009	321-5051-00
A27R294	321-5018-00			RES,FXD:METAL FILM;1.0K OHM,1%,0.125W,TC=100 PPM;1206,T&R	80009	321-5018-00
A27R295	321-5018-00			RES,FXD:METAL FILM;1.0K OHM,1%,0.125W,TC=100 PPM;1206,T&R	80009	321-5018-00
A27R296	321-5023-00			RES,FXD:METAL FILM;2.74K OHM,1%,0.125W,TC=100 PPM;1206,T&R	80009	321-5023-00
A27R300	321-5049-00			RES,FXD:METAL FILM;1M OHM,1%,0.125W,TC=100 PPM;1206,T&R	80009	321-5049-00
A27R301	321-5047-00			RES,FXD:METAL FILM;100K OHM,1%,0.125W,TC=100 PPM;1206,T&R	80009	321-5047-00
A27R302	321-5048-00			RES,FXD:METAL FILM;332K OHM,1%,0.125W,TC=100 PPM;1206,T&R	80009	321-5048-00
A27R303	321-5018-00			RES,FXD:METAL FILM;1.0K OHM,1%,0.125W,TC=100 PPM;1206,T&R	80009	321-5018-00
A27R305	321-5018-00			RES,FXD:METAL FILM;1.0K OHM,1%,0.125W,TC=100 PPM;1206,T&R	80009	321-5018-00
A27R310	321-5039-00			RES,FXD:METAL FILM;56.2K OHM,1%,0.125W,TC=100 PPM;1206,T&R	80009	321-5039-00
A27R311	321-5030-00			RES,FXD:METAL FILM;10.0K OHM,1%,0.125W,TC=100 PPM;1206,T&R	80009	321-5030-00
A27R312	321-5034-00			RES,FXD:METAL FILM;22.1K OHM,1%,0.125W,TC=100 PPM;1206,T&R	80009	321-5034-00
A27R313	321-5030-00			RES,FXD:METAL FILM;10.0K OHM,1%,0.125W,TC=100 PPM;1206,T&R	80009	321-5030-00
A27R314	321-5033-00			RES,FXD:METAL FILM;18.2K OHM,1%,0.125W,TC=100 PPM;1206,T&R	80009	321-5033-00
A27R315	321-5020-00			RES,FXD:METAL FILM;1.5K OHM,1%,0.125W,TC=100 PPM;1206,T&R	80009	321-5020-00
A27R316	321-5030-00			RES,FXD:METAL FILM;10.0K OHM,1%,0.125W,TC=100 PPM;1206,T&R	80009	321-5030-00
A27R317	321-5022-00			RES,FXD:METAL FILM;2.21K OHM,1%,0.125W,TC=100 PPM;1206,T&R	80009	321-5022-00
A27R318	321-5022-00			RES,FXD:METAL FILM;2.21K OHM,1%,0.125W,TC=100 PPM;1206,T&R	80009	321-5022-00
A27R319	321-5022-00			RES,FXD:METAL FILM;2.21K OHM,1%,0.125W,TC=100 PPM;1206,T&R	80009	321-5022-00
A27R320	321-5023-00			RES,FXD:METAL FILM;2.74K OHM,1%,0.125W,TC=100 PPM;1206,T&R	80009	321-5023-00
A27R321	321-5031-00			RES,FXD:METAL FILM;12.1K OHM,1%,0.125W,TC=100 PPM;1206,T&R	80009	321-5031-00
A27R322	321-5030-00			RES,FXD:METAL FILM;10.0K OHM,1%,0.125W,TC=100 PPM;1206,T&R	80009	321-5030-00
A27R323	321-5030-00			RES,FXD:METAL FILM;10.0K OHM,1%,0.125W,TC=100 PPM;1206,T&R	80009	321-5030-00
A27R324	321-5004-00			RES,FXD:METAL FILM;22.1 OHM,1%,0.125W,TC=100 PPM;1206,T&R	80009	321-5004-00
A27R325	321-5034-00			RES,FXD:METAL FILM;22.1K OHM,1%,0.125W,TC=100 PPM;1206,T&R	80009	321-5034-00
A27R326	321-5030-00			RES,FXD:METAL FILM;10.0K OHM,1%,0.125W,TC=100 PPM;1206,T&R	80009	321-5030-00
A27R327	321-5030-00			RES,FXD:METAL FILM;10.0K OHM,1%,0.125W,TC=100 PPM;1206,T&R	80009	321-5030-00

Component No.	Tektronix Part No.	Serial/Assembly No. Effective	Dscont	Name & Description	Mfr. Code	Mfr. Part No.
A27R330	321-5004-00			RES,FXD:METAL FILM;22.1 OHM,1%,0.125W,TC=100 PPM;1206,T&R	80009	321-5004-00
A27R331	321-5047-00			RES,FXD:METAL FILM;100K OHM,1%,0.125W,TC=100 PPM;1206,T&R	80009	321-5047-00
A27R332	321-5030-00			RES,FXD:METAL FILM;10.0K OHM,1%,0.125W,TC=100 PPM;1206,T&R	80009	321-5030-00
A27R333	321-5018-00			RES,FXD:METAL FILM;1.0K OHM,1%,0.125W,TC=100 PPM;1206,T&R	80009	321-5018-00
A27R334	321-5018-00			RES,FXD:METAL FILM;1.0K OHM,1%,0.125W,TC=100 PPM;1206,T&R	80009	321-5018-00
A27R335	321-5047-00			RES,FXD:METAL FILM;100K OHM,1%,0.125W,TC=100 PPM;1206,T&R	80009	321-5047-00
A27R336	321-5006-00			RES,FXD:METAL FILM;100 OHM,1%,0.125W,TC=100 PPM;1206,T&R	80009	321-5006-00
A27R340	321-5018-00			RES,FXD:METAL FILM;1.0K OHM,1%,0.125W,TC=100 PPM;1206,T&R	80009	321-5018-00
A27R341	321-5018-00			RES,FXD:METAL FILM;1.0K OHM,1%,0.125W,TC=100 PPM;1206,T&R	80009	321-5018-00
A27R342	321-5030-00			RES,FXD:METAL FILM;10.0K OHM,1%,0.125W,TC=100 PPM;1206,T&R	80009	321-5030-00
A27R343	321-5030-00			RES,FXD:METAL FILM;10.0K OHM,1%,0.125W,TC=100 PPM;1206,T&R	80009	321-5030-00
A27R350	321-5030-00			RES,FXD:METAL FILM;10.0K OHM,1%,0.125W,TC=100 PPM;1206,T&R	80009	321-5030-00
A27R351	321-5023-00			RES,FXD:METAL FILM;2.74K OHM,1%,0.125W,TC=100 PPM;1206,T&R	80009	321-5023-00
A27R352	321-5004-00			RES,FXD:METAL FILM;22.1 OHM,1%,0.125W,TC=100 PPM;1206,T&R	80009	321-5004-00
A27R353	321-5030-00			RES,FXD:METAL FILM;10.0K OHM,1%,0.125W,TC=100 PPM;1206,T&R	80009	321-5030-00
A27R354	321-5018-00			RES,FXD:METAL FILM;1.0K OHM,1%,0.125W,TC=100 PPM;1206,T&R	80009	321-5018-00
A27R360	321-5043-00			RES,FXD:METAL FILM;47.5 OHM,1%,0.125W,TC=100 PPM;1206,T&R	80009	321-5043-00
A27R370	321-5047-00			RES,FXD:METAL FILM;100K OHM,1%,0.125W,TC=100 PPM;1206,T&R	80009	321-5047-00
A27R390	321-5023-00			RES,FXD:METAL FILM;2.74K OHM,1%,0.125W,TC=100 PPM;1206,T&R	80009	321-5023-00
A27R391	321-5030-00			RES,FXD:METAL FILM;10.0K OHM,1%,0.125W,TC=100 PPM;1206,T&R	80009	321-5030-00
A27R392	321-5043-00			RES,FXD:METAL FILM;47.5 OHM,1%,0.125W,TC=100 PPM;1206,T&R	80009	321-5043-00
A27R393	321-5030-00			RES,FXD:METAL FILM;10.0K OHM,1%,0.125W,TC=100 PPM;1206,T&R	80009	321-5030-00
A27R394	321-5030-00			RES,FXD:METAL FILM;10.0K OHM,1%,0.125W,TC=100 PPM;1206,T&R	80009	321-5030-00
A27R395	321-5018-00			RES,FXD:METAL FILM;1.0K OHM,1%,0.125W,TC=100 PPM;1206,T&R	80009	321-5018-00
A27R400	321-5013-00			RES,FXD:METAL FILM;392 OHM,1%,0.125W,TC=100 PPM;1206,T&R	80009	321-5013-00
A27R401	321-5013-00			RES,FXD:METAL FILM;392 OHM,1%,0.125W,TC=100 PPM;1206,T&R	80009	321-5013-00
A27R402	321-5014-00			RES,FXD:METAL FILM;475 OHM,1%,0.125W,TC=100 PPM;1206,T&R	80009	321-5014-00
A27R410	321-5020-00			RES,FXD:METAL FILM;1.5K OHM,1%,0.125W,TC=100 PPM;1206,T&R	80009	321-5020-00
A27R411	321-5032-00			RES,FXD:METAL FILM;15.0K OHM,1%,0.125W,TC=100 PPM;1206,T&R	80009	321-5032-00

Component No.	Tektronix Part No.	Serial/Assembly No. Effective	Dscont	Name & Description	Mfr. Code	Mfr. Part No.
A27R412	321-5032-00			RES,FXD:METAL FILM;15.0K OHM,1%,0.125W,TC=100 PPM;1206,T&R	80009	321-5032-00
A27R413	321-5032-00			RES,FXD:METAL FILM;15.0K OHM,1%,0.125W,TC=100 PPM;1206,T&R	80009	321-5032-00
A27R414	321-5032-00			RES,FXD:METAL FILM;15.0K OHM,1%,0.125W,TC=100 PPM;1206,T&R	80009	321-5032-00
A27R415	321-5026-00			RES,FXD:METAL FILM;4.75K OHM,1%,0.125W,TC=100 PPM;1206,T&R	80009	321-5026-00
A27R416	321-5020-00			RES,FXD:METAL FILM;1.5K OHM,1%,0.125W,TC=100 PPM;1206,T&R	80009	321-5020-00
A27R417	321-5038-00			RES,FXD:METAL FILM;47.5K OHM,1%,0.125W,TC=100 PPM;1206,T&R	80009	321-5038-00
A27R420	321-5017-00			RES,FXD:METAL FILM;825 OHM,1%,0.125W,TC=100 PPM;1206,T&R	80009	321-5017-00
A27R421	321-5007-00			RES,FXD:METAL FILM;121 OHM,1%,0.125W,TC=100 PPM;1206,T&R	80009	321-5007-00
A27R422	321-5018-00			RES,FXD:METAL FILM;1.0K OHM,1%,0.125W,TC=100 PPM;1206,T&R	80009	321-5018-00
A27R430	321-5006-00			RES,FXD:METAL FILM;100 OHM,1%,0.125W,TC=100 PPM;1206,T&R	80009	321-5006-00
A27R431	311-1936-00			RES,VAR,NONWW:TRMR,50 OHM,20%,0.5W	32997	3386X-1-500
A27R432	321-5014-00			RES,FXD:METAL FILM;475 OHM,1%,0.125W,TC=100 PPM;1206,T&R	80009	321-5014-00
A27R433	321-5014-00			RES,FXD:METAL FILM;475 OHM,1%,0.125W,TC=100 PPM;1206,T&R	80009	321-5014-00
A27R434	321-5013-00			RES,FXD:METAL FILM;392 OHM,1%,0.125W,TC=100 PPM;1206,T&R	80009	321-5013-00
A27R435	321-5014-00			RES,FXD:METAL FILM;475 OHM,1%,0.125W,TC=100 PPM;1206,T&R	80009	321-5014-00
A27R436	321-5026-00			RES,FXD:METAL FILM;4.75K OHM,1%,0.125W,TC=100 PPM;1206,T&R	80009	321-5026-00
A27R437	321-5014-00			RES,FXD:METAL FILM;475 OHM,1%,0.125W,TC=100 PPM;1206,T&R	80009	321-5014-00
A27R438	321-5015-00			RES,FXD:METAL FILM;562 OHM,1%,0.125W,TC=100 PPM;1206,T&R	80009	321-5015-00
A27R439	321-5015-00			RES,FXD:METAL FILM;562 OHM,1%,0.125W,TC=100 PPM;1206,T&R	80009	321-5015-00
A27R440	321-5018-00			RES,FXD:METAL FILM;1.0K OHM,1%,0.125W,TC=100 PPM;1206,T&R	80009	321-5018-00
A27R441	321-5030-00			RES,FXD:METAL FILM;10.0K OHM,1%,0.125W,TC=100 PPM;1206,T&R	80009	321-5030-00
A27R450	321-5006-00			RES,FXD:METAL FILM;100 OHM,1%,0.125W,TC=100 PPM;1206,T&R	80009	321-5006-00
A27R451	321-5018-00			RES,FXD:METAL FILM;1.0K OHM,1%,0.125W,TC=100 PPM;1206,T&R	80009	321-5018-00
A27R452	321-5014-00			RES,FXD:METAL FILM;475 OHM,1%,0.125W,TC=100 PPM;1206,T&R	80009	321-5014-00
A27R453	321-5043-00			RES,FXD:METAL FILM;47.5 OHM,1%,0.125W,TC=100 PPM;1206,T&R	80009	321-5043-00
A27R454	321-5024-00			RES,FXD:METAL FILM;3.32K OHM,1%,0.125W,TC=100 PPM;1206,T&R	80009	321-5024-00
A27R455	321-5000-00			RES,FXD:METAL FILM;10 OHM,1%,0.125W,TC=100 PPM;1206,T&R	57668	MCR18EZHFW10E
A27R460	321-5000-00			RES,FXD:METAL FILM;10 OHM,1%,0.125W,TC=100 PPM;1206,T&R	57668	MCR18EZHFW10E
A27R461	321-5000-00			RES,FXD:METAL FILM;10 OHM,1%,0.125W,TC=100 PPM;1206,T&R	57668	MCR18EZHFW10E
A27R462	321-5030-00			RES,FXD:METAL FILM;10.0K OHM,1%,0.125W,TC=100 PPM;1206,T&R	80009	321-5030-00

Component No.	Tektronix Part No.	Serial/Assembly No. Effective	Dscont	Name & Description	Mfr. Code	Mfr. Part No.
A27R463	321-5030-00			RES,FXD:METAL FILM;10.0K OHM,1%,0.125W,TC=100 PPM;1206,T&R	80009	321-5030-00
A27R464	311-1237-00			RES,VAR,NONWW:1K OHM,10%,0.50W	80009	311-1237-00
A27R465	321-5023-00			RES,FXD:METAL FILM;2.74K OHM,1%,0.125W,TC=100 PPM;1206,T&R	80009	321-5023-00
A27R470	321-5000-00			RES,FXD:METAL FILM;10 OHM,1%,0.125W,TC=100 PPM;1206,T&R	57668	MCR18EZHFW10E
A27R471	321-5000-00			RES,FXD:METAL FILM;10 OHM,1%,0.125W,TC=100 PPM;1206,T&R	57668	MCR18EZHFW10E
A27R472	321-5030-00			RES,FXD:METAL FILM;10.0K OHM,1%,0.125W,TC=100 PPM;1206,T&R	80009	321-5030-00
A27R473	321-5030-00			RES,FXD:METAL FILM;10.0K OHM,1%,0.125W,TC=100 PPM;1206,T&R	80009	321-5030-00
A27R480	321-5032-00			RES,FXD:METAL FILM;15.0K OHM,1%,0.125W,TC=100 PPM;1206,T&R	80009	321-5032-00
A27R481	321-5040-00			RES,FXD:METAL FILM;68.1K OHM,1%,0.125W,TC=100 PPM;1206,T&R	80009	321-5040-00
A27R482	321-5030-00			RES,FXD:METAL FILM;10.0K OHM,1%,0.125W,TC=100 PPM;1206,T&R	80009	321-5030-00
A27R490	321-5030-00			RES,FXD:METAL FILM;10.0K OHM,1%,0.125W,TC=100 PPM;1206,T&R	80009	321-5030-00
A27R491	321-5030-00			RES,FXD:METAL FILM;10.0K OHM,1%,0.125W,TC=100 PPM;1206,T&R	80009	321-5030-00
A27R500	311-1237-00			RES,VAR,NONWW:1K OHM,10%,0.50W	80009	311-1237-00
A27R501	311-1236-00			RES,VAR,NONWW:TRMR,250 OHM,0.5W	80009	311-1236-00
A27R503	321-5018-00			RES,FXD:METAL FILM;1.0K OHM,1%,0.125W,TC=100 PPM;1206,T&R	80009	321-5018-00
A27R504	321-5004-00			RES,FXD:METAL FILM;22.1 OHM,1%,0.125W,TC=100 PPM;1206,T&R	80009	321-5004-00
A27R510	321-5030-00			RES,FXD:METAL FILM;10.0K OHM,1%,0.125W,TC=100 PPM;1206,T&R	80009	321-5030-00
A27R520	321-5030-00			RES,FXD:METAL FILM;10.0K OHM,1%,0.125W,TC=100 PPM;1206,T&R	80009	321-5030-00
A27R521	321-5030-00			RES,FXD:METAL FILM;10.0K OHM,1%,0.125W,TC=100 PPM;1206,T&R	80009	321-5030-00
A27R523	321-5004-00			RES,FXD:METAL FILM;22.1 OHM,1%,0.125W,TC=100 PPM;1206,T&R	80009	321-5004-00
A27R524	321-5006-00			RES,FXD:METAL FILM;100 OHM,1%,0.125W,TC=100 PPM;1206,T&R	80009	321-5006-00
A27R525	321-5004-00			RES,FXD:METAL FILM;22.1 OHM,1%,0.125W,TC=100 PPM;1206,T&R	80009	321-5004-00
A27R526	311-1248-00			RES,VAR,NONWW:TRMR,500 OHM,0.5W	80009	311-1248-00
A27R530	321-5043-00			RES,FXD:METAL FILM;47.5 OHM,1%,0.125W,TC=100 PPM;1206,T&R	80009	321-5043-00
A27R531	321-5004-00			RES,FXD:METAL FILM;22.1 OHM,1%,0.125W,TC=100 PPM;1206,T&R	80009	321-5004-00
A27R532	321-5021-00			RES,FXD:METAL FILM;1.82K OHM,1%,0.125W,TC=100 PPM;1206,T&R	80009	321-5021-00
A27R540	321-5004-00			RES,FXD:METAL FILM;22.1 OHM,1%,0.125W,TC=100 PPM;1206,T&R	80009	321-5004-00
A27R541	321-5006-00			RES,FXD:METAL FILM;100 OHM,1%,0.125W,TC=100 PPM;1206,T&R	80009	321-5006-00
A27R542	321-5021-00			RES,FXD:METAL FILM;1.82K OHM,1%,0.125W,TC=100 PPM;1206,T&R	80009	321-5021-00
A27R543	321-5043-00			RES,FXD:METAL FILM;47.5 OHM,1%,0.125W,TC=100 PPM;1206,T&R	80009	321-5043-00
A27R544	321-5014-00			RES,FXD:METAL FILM;475 OHM,1%,0.125W,TC=100 PPM;1206,T&R	80009	321-5014-00

Component No.	Tektronix Part No.	Serial/Assembly No. Effective	Dscont	Name & Description	Mfr. Code	Mfr. Part No.
A27R545	321-5014-00			RES,FXD:METAL FILM;475 OHM,1%,0.125W,TC=100 PPM;1206,T&R	80009	321-5014-00
A27R550	321-5000-00			RES,FXD:METAL FILM;10 OHM,1%,0.125W,TC=100 PPM;1206,T&R	57668	MCR18EZHFW10E
A27R562	311-1245-00			RES,VAR,NONWW:TRMR,10K OHM,0.5W	80009	311-1245-00
A27R570	321-5029-00			RES,FXD:METAL FILM;8.25K OHM,1%,0.125W,TC=100 PPM;1206,T&R	80009	321-5029-00
A27R571	321-5047-00			RES,FXD:METAL FILM;100K OHM,1%,0.125W,TC=100 PPM;1206,T&R	80009	321-5047-00
A27R572	321-5047-00			RES,FXD:METAL FILM;100K OHM,1%,0.125W,TC=100 PPM;1206,T&R	80009	321-5047-00
A27R580	321-5004-00			RES,FXD:METAL FILM;22.1 OHM,1%,0.125W,TC=100 PPM;1206,T&R	80009	321-5004-00
A27R581	321-5034-00			RES,FXD:METAL FILM;22.1K OHM,1%,0.125W,TC=100 PPM;1206,T&R	80009	321-5034-00
A27R582	321-5030-00			RES,FXD:METAL FILM;10.0K OHM,1%,0.125W,TC=100 PPM;1206,T&R	80009	321-5030-00
A27R583	321-5030-00			RES,FXD:METAL FILM;10.0K OHM,1%,0.125W,TC=100 PPM;1206,T&R	80009	321-5030-00
A27R584	321-5004-00			RES,FXD:METAL FILM;22.1 OHM,1%,0.125W,TC=100 PPM;1206,T&R	80009	321-5004-00
A27R585	321-5030-00			RES,FXD:METAL FILM;10.0K OHM,1%,0.125W,TC=100 PPM;1206,T&R	80009	321-5030-00
A27R586	321-5030-00			RES,FXD:METAL FILM;10.0K OHM,1%,0.125W,TC=100 PPM;1206,T&R	80009	321-5030-00
A27R590	321-5026-00			RES,FXD:METAL FILM;4.75K OHM,1%,0.125W,TC=100 PPM;1206,T&R	80009	321-5026-00
A27R591	321-5030-00			RES,FXD:METAL FILM;10.0K OHM,1%,0.125W,TC=100 PPM;1206,T&R	80009	321-5030-00
A27R600	321-5014-00			RES,FXD:METAL FILM;475 OHM,1%,0.125W,TC=100 PPM;1206,T&R	80009	321-5014-00
A27R601	321-5026-00			RES,FXD:METAL FILM;4.75K OHM,1%,0.125W,TC=100 PPM;1206,T&R	80009	321-5026-00
A27R602	321-5011-00			RES,FXD:METAL FILM;274 OHM,1%,0.125W,TC=100 PPM;1206,T&R	80009	321-5011-00
A27R603	321-5030-00			RES,FXD:METAL FILM;10.0K OHM,1%,0.125W,TC=100 PPM;1206,T&R	80009	321-5030-00
A27R604	321-5030-00			RES,FXD:METAL FILM;10.0K OHM,1%,0.125W,TC=100 PPM;1206,T&R	80009	321-5030-00
A27R605	321-5004-00			RES,FXD:METAL FILM;22.1 OHM,1%,0.125W,TC=100 PPM;1206,T&R	80009	321-5004-00
A27R606	321-5043-00			RES,FXD:METAL FILM;47.5 OHM,1%,0.125W,TC=100 PPM;1206,T&R	80009	321-5043-00
A27R610	321-5043-00			RES,FXD:METAL FILM;47.5 OHM,1%,0.125W,TC=100 PPM;1206,T&R	80009	321-5043-00
A27R611	321-5011-00			RES,FXD:METAL FILM;274 OHM,1%,0.125W,TC=100 PPM;1206,T&R	80009	321-5011-00
A27R620	321-5018-00			RES,FXD:METAL FILM;1.0K OHM,1%,0.125W,TC=100 PPM;1206,T&R	80009	321-5018-00
A27R621	321-5004-00			RES,FXD:METAL FILM;22.1 OHM,1%,0.125W,TC=100 PPM;1206,T&R	80009	321-5004-00
A27R630	321-5044-00			RES,FXD:METAL FILM;56.2 OHM,1%,0.125W,TC=100 PPM;1206,T&R	01121	BCD56R2FT
A27R631	311-1248-00			RES,VAR,NONWW:TRMR,500 OHM,0.5W	80009	311-1248-00
A27R632	321-5018-00			RES,FXD:METAL FILM;1.0K OHM,1%,0.125W,TC=100 PPM;1206,T&R	80009	321-5018-00
A27R633	321-5018-00			RES,FXD:METAL FILM;1.0K OHM,1%,0.125W,TC=100 PPM;1206,T&R	80009	321-5018-00

Component No.	Tektronix Part No.	Serial/Assembly No. Effective	Dscont	Name & Description	Mfr. Code	Mfr. Part No.
A27R640	321-5018-00			RES,FXD:METAL FILM;1.0K OHM,1%,0.125W,TC=100 PPM;1206,T&R	80009	321-5018-00
A27R641	321-5004-00			RES,FXD:METAL FILM;22.1 OHM,1%,0.125W,TC=100 PPM;1206,T&R	80009	321-5004-00
A27R643	321-5014-00			RES,FXD:METAL FILM;475 OHM,1%,0.125W,TC=100 PPM;1206,T&R	80009	321-5014-00
A27R644	321-5045-00			RES,FXD:METAL FILM;68.1 OHM,1%,0.125W,TC=100 PPM;1206,T&R	80009	321-5045-00
A27R645	321-5014-00			RES,FXD:METAL FILM;475 OHM,1%,0.125W,TC=100 PPM;1206,T&R	80009	321-5014-00
A27R646	321-5044-00			RES,FXD:METAL FILM;56.2 OHM,1%,0.125W,TC=100 PPM;1206,T&R	01121	BCD56R2FT
A27R647	321-5011-00			RES,FXD:METAL FILM;274 OHM,1%,0.125W,TC=100 PPM;1206,T&R	80009	321-5011-00
A27R648	321-5008-00			RES,FXD:METAL FILM;150 OHM,1%,0.125W,TC=100 PPM;1206,T&R	80009	321-5008-00
A27R650	321-5014-00			RES,FXD:METAL FILM;475 OHM,1%,0.125W,TC=100 PPM;1206,T&R	80009	321-5014-00
A27R652	321-5011-00			RES,FXD:METAL FILM;274 OHM,1%,0.125W,TC=100 PPM;1206,T&R	80009	321-5011-00
A27R653	321-5011-00			RES,FXD:METAL FILM;274 OHM,1%,0.125W,TC=100 PPM;1206,T&R	80009	321-5011-00
A27R654	321-5004-00			RES,FXD:METAL FILM;22.1 OHM,1%,0.125W,TC=100 PPM;1206,T&R	80009	321-5004-00
A27R660	321-5004-00			RES,FXD:METAL FILM;22.1 OHM,1%,0.125W,TC=100 PPM;1206,T&R	80009	321-5004-00
A27R661	321-5000-00			RES,FXD:METAL FILM;10 OHM,1%,0.125W,TC=100 PPM;1206,T&R	57668	MCR18EZHFW10E
A27R662	321-5030-00			RES,FXD:METAL FILM;10.0K OHM,1%,0.125W,TC=100 PPM;1206,T&R	80009	321-5030-00
A27R670	321-5045-00			RES,FXD:METAL FILM;68.1 OHM,1%,0.125W,TC=100 PPM;1206,T&R	80009	321-5045-00
A27R671	321-5018-00			RES,FXD:METAL FILM;1.0K OHM,1%,0.125W,TC=100 PPM;1206,T&R	80009	321-5018-00
A27R672	321-5030-00			RES,FXD:METAL FILM;10.0K OHM,1%,0.125W,TC=100 PPM;1206,T&R	80009	321-5030-00
A27R710	321-5011-00			RES,FXD:METAL FILM;274 OHM,1%,0.125W,TC=100 PPM;1206,T&R	80009	321-5011-00
A27R720	321-5004-00			RES,FXD:METAL FILM;22.1 OHM,1%,0.125W,TC=100 PPM;1206,T&R	80009	321-5004-00
A27R721	321-5018-00			RES,FXD:METAL FILM;1.0K OHM,1%,0.125W,TC=100 PPM;1206,T&R	80009	321-5018-00
A27R730	321-5018-00			RES,FXD:METAL FILM;1.0K OHM,1%,0.125W,TC=100 PPM;1206,T&R	80009	321-5018-00
A27R740	321-5004-00			RES,FXD:METAL FILM;22.1 OHM,1%,0.125W,TC=100 PPM;1206,T&R	80009	321-5004-00
A27R741	321-5011-00			RES,FXD:METAL FILM;274 OHM,1%,0.125W,TC=100 PPM;1206,T&R	80009	321-5011-00
A27R742	321-5044-00			RES,FXD:METAL FILM;56.2 OHM,1%,0.125W,TC=100 PPM;1206,T&R	01121	BCD56R2FT
A27R750	321-5044-00			RES,FXD:METAL FILM;56.2 OHM,1%,0.125W,TC=100 PPM;1206,T&R	01121	BCD56R2FT
A27R751	321-5006-00			RES,FXD:METAL FILM;100 OHM,1%,0.125W,TC=100 PPM;1206,T&R	80009	321-5006-00
A27R752	321-5006-00			RES,FXD:METAL FILM;100 OHM,1%,0.125W,TC=100 PPM;1206,T&R	80009	321-5006-00
A27R753	321-5009-00			RES,FXD:METAL FILM;182 OHM,1%,0.125W,TC=100 PPM;1206,T&R	80009	321-5009-00

Component No.	Tektronix Part No.	Serial/Assembly No. Effective	Dscont	Name & Description	Mfr. Code	Mfr. Part No.
A27R754	321-5004-00			RES,FXD:METAL FILM;22.1 OHM,1%,0.125W,TC=100 PPM;1206,T&R	80009	321-5004-00
A27R755	321-5004-00			RES,FXD:METAL FILM;22.1 OHM,1%,0.125W,TC=100 PPM;1206,T&R	80009	321-5004-00
A27R756	321-5006-00			RES,FXD:METAL FILM;100 OHM,1%,0.125W,TC=100 PPM;1206,T&R	80009	321-5006-00
A27R760	321-5006-00			RES,FXD:METAL FILM;100 OHM,1%,0.125W,TC=100 PPM;1206,T&R	80009	321-5006-00
A27R761	321-5006-00			RES,FXD:METAL FILM;100 OHM,1%,0.125W,TC=100 PPM;1206,T&R	80009	321-5006-00
A27R762	321-5006-00			RES,FXD:METAL FILM;100 OHM,1%,0.125W,TC=100 PPM;1206,T&R	80009	321-5006-00
A27R763	321-5018-00			RES,FXD:METAL FILM;1.0K OHM,1%,0.125W,TC=100 PPM;1206,T&R	80009	321-5018-00
A27R764	321-5020-00			RES,FXD:METAL FILM;1.5K OHM,1%,0.125W,TC=100 PPM;1206,T&R	80009	321-5020-00
A27R765	321-5000-00			RES,FXD:METAL FILM;10 OHM,1%,0.125W,TC=100 PPM;1206,T&R	57668	MCR18EZHFW10E
A27R770	311-1936-00			RES,VAR,NONWW:TRMR,50 OHM,20%,0.5W	32997	3386X-1-500
A27R771	321-5030-00			RES,FXD:METAL FILM;10.0K OHM,1%,0.125W,TC=100 PPM;1206,T&R	80009	321-5030-00
A27R772	321-5018-00			RES,FXD:METAL FILM;1.0K OHM,1%,0.125W,TC=100 PPM;1206,T&R	80009	321-5018-00
A27T180	120-1721-00			TRANSFORMER,RF:AUTO,6:6:6 RATIO	0JR03	120-1721-00
A27T660	120-1721-00			TRANSFORMER,RF:AUTO,6:6:6 RATIO	0JR03	120-1721-00
A27U100	156-5018-00	B010100	B010185	IC,LINEAR:BIPOLAR,OP-AMP;DUAL,SINGLE SUPPLY;LM358D,SO8.150,TUBE	80009	156-5018-00
A27U100	156-5138-00	B010186		IC,LINEAR:BIFET,OP-AMP;DUAL;MC34002/TL072,SO8.150,TUBE	80009	156-5138-00
A27U200	156-5528-00			IC,MISC:HCTCMOS,ANALOG SWITCH;QUAD;74HCT4316,SO16.150	80009	156-5528-00
A27U201	156-5018-00			IC,LINEAR:BIPOLAR,OP-AMP;DUAL,SINGLE SUPPLY;LM358D,SO8.150,TUBE	80009	156-5018-00
A27U210	156-5082-01			IC,LINEAR:BIPOLAR,OP-AMP;LOW OFFSET;OP07CD,SO8.150,16MM T&R	80009	156-5082-01
A27U211	156-5018-00			IC,LINEAR:BIPOLAR,OP-AMP;DUAL,SINGLE SUPPLY;LM358D,SO8.150,TUBE	80009	156-5018-00
A27U231	156-5021-01			IC,DIGITAL:CMOS,REGISTER;8-STAGE SHIFT/STORAGE, 3-STATE;4094,SO16.150,16MM T&R	80009	156-5021-01
A27U240	156-5021-01			IC,DIGITAL:CMOS,REGISTER;8-STAGE SHIFT/STORAGE, 3-STATE;4094,SO16.150,16MM T&R	80009	156-5021-01
A27U250	156-5467-00			IC,LINEAR:BIPOLAR,OP-AMP;1.0GHZ GBW;NE5539D,SO14.150	80009	156-5467-00
A27U280	156-6074-00			IC,LINEAR:	80009	156-6074-00
A27U300	156-5138-00			IC,LINEAR:BIFET,OP-AMP;DUAL;MC34002/TL072,SO8.150,TUBE	80009	156-5138-00
A27U320	156-5138-00			IC,LINEAR:BIFET,OP-AMP;DUAL;MC34002/TL072,SO8.150,TUBE	80009	156-5138-00
A27U321	156-6073-00			IC,LINEAR:BIPOLAR,OP-AMP;CURRENT FEEDBACK,200MHZ,1 TO 8 GAIN RANGE;CLC400AJE,SO8.150	80009	156-6073-00
A27U330	156-5021-01			IC,DIGITAL:CMOS,REGISTER;8-STAGE SHIFT/STORAGE, 3-STATE;4094,SO16.150,16MM T&R	80009	156-5021-01
A27U350	156-6141-00			IC,MISC:BIPOLAR,MULTIPLIER;FOUR QUADRANT,50OMHZ;AD834JR,SO8.150,TUBE	80009	156-6141-00
A27U370	156-2884-00			IC,LINEAR:BIPOLAR,AMPLIFIER;4.0W AUDIO POWER AMPLIFIER W/DC VOLUME CONTROL;TDA1013B,SIP09	80009	156-2884-00
A27U390	156-5018-00			IC,LINEAR:BIPOLAR,OP-AMP;DUAL,SINGLE SUPPLY;LM358D,SO8.150,TUBE	80009	156-5018-00

Component No.	Tektronix Part No.	Serial/Assembly No. Effective	Dscont	Name & Description	Mfr. Code	Mfr. Part No.
A27U400	156-5528-00			IC,MISC:HCTCMOS,ANALOG SWITCH;QUAD;74HCT4316,SO16.150	80009	156-5528-00
A27U410	156-5097-00			IC,MISC:CMOS,ANALOG MUX;8 CHANNEL;CD4051,SO16.150	80009	156-5097-00
A27U420	156-5073-00			IC,MISC:HCMOS,ANALOG MUX;TRIPLE 2-CHANNEL;74HC4053,SO16.150,TUBE	80009	156-5073-00
A27U421	156-5120-00			IC,MISC:CMOS,ANALOG MUX;DUAL 4-CHANNEL;74HC4052,SO16.150	80009	156-5120-00
A27U440	156-6141-00			IC,MISC:BIPOLAR,MULTIPLIER;FOUR QUADRANT,500MHZ;AD834JR,SO8.150,TUBE	80009	156-6141-00
A27U450	156-5098-00			IC,DIGITAL:HCTCMOS,GATE;QUAD 2-INPUT NAND;74HCT00,SO14.150,TUBE	80009	156-5098-00
A27U460	156-5043-01			IC,CONVERTER:BIPOLAR,D/A;8 BIT,CURRENT OUT,MULTIPLYING;DAC08ED,SO16.150,16MM T&R	80009	156-5043-01
A27U480	156-5018-00			IC,LINEAR:BIPOLAR,OP-AMP;DUAL,SINGLE SUPPLY;LM358D,SO8.150,TUBE	80009	156-5018-00
A27U490	156-0277-00			IC,LINEAR:BIPOLAR,VOLTAGE REGULATOR;POSITIVE,5.0V,1.0A,4%;MC7805CT,TO-220	80009	156-0277-00
A27U510	156-5120-00			IC,MISC:CMOS,ANALOG MUX;DUAL 4-CHANNEL;74HC4052,SO16.150	80009	156-5120-00
A27U520	156-5352-00			IC,LINEAR:BIFET,OP-AMP;LOW OFFSET;LT1056C,SO8.150	80009	156-5352-00
A27U530	156-6073-00			IC,LINEAR:BIPOLAR,OP-AMP;CURRENT FEEDBACK,200MHZ,1 TO 8 GAIN RANGE;CLC400AJE,SO8.150	80009	156-6073-00
A27U550	156-5130-00			IC,DIGITAL:HCTCMOS,GATE;TRIPLE 3-INPUT NAND;74HCT10,SO14.150,TUBE	80009	156-5130-00
A27U580	156-5119-00			IC,LINEAR:BIPOLAR,COMPARATOR;DUAL,OPEN COLLECTOR,80NS;LM319D,SO14.150,TUBE	80009	156-5119-00
A27U590	156-0846-00			IC,LINEAR:BIPOLAR,VOLTAGE REGULATOR;NEGATIVE,-5.0V,1.0A,4.0%;MC7905CT,TO-220	01295	UA7905CKC
A27U600	156-6073-00			IC,LINEAR:BIPOLAR,OP-AMP;CURRENT FEEDBACK,200MHZ,1 TO 8 GAIN RANGE;CLC400AJE,SO8.150	80009	156-6073-00
A27U610	156-6073-00			IC,LINEAR:BIPOLAR,OP-AMP;CURRENT FEEDBACK,200MHZ,1 TO 8 GAIN RANGE;CLC400AJE,SO8.150	80009	156-6073-00
A27U620	156-5073-00			IC,MISC:HCMOS,ANALOG MUX;TRIPLE 2-CHANNEL;74HC4053,SO16.150,TUBE	80009	156-5073-00
A27U630	156-5269-00			IC,DIGITAL:ECL,RECEIVER;TRIPLE LINE;10H116,PLCC20,TUBE	80009	156-5269-00
A27U650	156-6250-00			IC,MISC:CMOS,ANALOG MUX;8 CHANNEL,RF/VIDEO;MAX310CWN,SO18.300,TUBE	80009	156-6250-00
A27U660	156-6090-00			IC,LINEAR:BIPOLAR,AMPLIFIER;LOGARITHMIC,DC COUPLED,350 MHZ;AD640JP,PLCC20,TUBE	80009	156-6090-00
A27U670	156-5119-00			IC,LINEAR:BIPOLAR,COMPARATOR;DUAL,OPEN COLLECTOR,80NS;LM319D,SO14.150,TUBE	80009	156-5119-00
A27U740	156-6090-00			IC,LINEAR:BIPOLAR,AMPLIFIER;LOGARITHMIC,DC COUPLED,350 MHZ;AD640JP,PLCC20,TUBE	80009	156-6090-00
A27U750	156-6073-00			IC,LINEAR:BIPOLAR,OP-AMP;CURRENT FEEDBACK,200MHZ,1 TO 8 GAIN RANGE;CLC400AJE,SO8.150	80009	156-6073-00
A27U760	156-6074-00			IC,LINEAR:	80009	156-6074-00
FL16	119-0294-01			FILTER,LOW PASS:DC TO 1.8GHZ	50140	11L250-X1800-0
FL17	119-2205-00			1ST IF FILTER:TUNED CAVITY 2110	80009	119-2205-00
FL18	015-1027-00			FILTER,LOW PASS:	80009	015-1027-00
J102	136-0094-00			JACK,TELEPHONE:MINIATURE,SHUNT TYPE	80009	136-0094-00
LS103	119-0962-00			LOUDSPEAKER,PM:8 OHM,3W,2.047 DIA	54473	EAS-5PH04SC
R360	311-0679-00			RES,VAR,NONWW:PNL,2X10K OHM,0.5W	12697	D381-CM39687
R480	311-2052-00			RES,VAR,NONWW:PNL,20K OHM,20%,0.5W	80009	311-2052-00
V1	154-0913-00		B034199	ELECTRON TUBE:CRT,FINISHED	80009	154-0913-00
V1	154-1000-00	B044200				

Component No.	Tektronix Part No.	Serial/Assembly No. Effective	Dscont	Name & Description	Mfr. Code	Mfr. Part No.
W1	174-3740-00	B044200				
W4	174-0199-01			CA ASSY,SP,ELEC:SEMI-RIGID	80009	174-0199-01
W6	174-1228-00			CA ASSY,SP,ELEC:20,26 AWG,14.75 L,RIBBON	TK2469	174-1228-00
W7	174-0195-00			CA ASSY,SP,ELEC:	80009	174-0195-00
W8	174-0196-00			CA ASSY,SP,ELEC:	80009	174-0196-00
W10	174-0194-00			CA ASSY,SP,ELEC:	80009	174-0194-00
W11	174-0818-00			CABLE ASSY,RF:50 OHM COAX,5.25 L	80009	174-0818-00
W12	174-0817-00			CABLE ASSY,RF:50 OHM COAX,7.25 L	80009	174-0817-00
W16	174-0819-00			CABLE ASSY,RF:50 OHM COAX,8.25 L	80009	174-0819-00
W22	174-0200-00			CA ASSY,SP,ELEC:SEMI-RIGID	80009	174-0200-00
W24	174-0192-00			CA ASSY,SP,ELEC: SEMI-RIGID	80009	174-0192-00
W25	174-0251-00			CA ASSY,SP,ELEC:4,26 AWG,3.0 L,RIBBON	80009	174-0251-00
W26	174-0534-00			CA ASSY,SP,ELEC:50,28 AWG,5.0 L RIBBON	TK2469	174-0534-00
W28	174-0265-01			CA ASSY,SP,ELEC:10,26 AWG,7.25 L	80009	174-0265-01
W29	174-0406-01			CA ASSY,SP,ELEC:3,26 AWG,6.5 L	80009	174-0406-01
W30	174-1138-00			CABLE ASSY,RF:4 CAV FLTR TO LOW PASS FLTR,4 .915 L,SEMI-RIGID	80009	174-1138-00
W31	174-1143-00			CABLE ASSY,RF:LOW PASS FLTR TO 1ST CONVERTE R,2.37 L,SEMI-RIGID	80009	174-1143-00
W35	174-1263-01			CA ASSY,RF:50 OHM COAX,14.0 L	80009	174-1263-01
W36	174-0817-00			CABLE ASSY,RF:50 OHM COAX,7.25 L	80009	174-0817-00
W37	174-0817-00			CABLE ASSY,RF:50 OHM COAX,7.25 L	80009	174-0817-00
W38	174-0817-00			CABLE ASSY,RF:50 OHM COAX,7.25 L	80009	174-0817-00
W39	174-1238-00			CABLE ASSY,RF:50 OHM COAX,16.5 L	TK2469	174-1238-00
W40	174-1237-00			CABLE ASSY,RF:50 OHM COAX,12.5 L	TK2469	174-1237-00
W41	174-0820-00			CABLE ASSY,RF:50 OHM COAX,11.5 L	80009	174-0820-00
W42	174-1237-00			CABLE ASSY,RF:50 OHM COAX,12.5 L	TK2469	174-1237-00
W43	174-1237-00			CABLE ASSY,RF:50 OHM COAX,12.5 L	TK2469	174-1237-00
W44	174-0819-00			CABLE ASSY,RF:50 OHM COAX,8.25 L	80009	174-0819-00
W45	174-0819-00			CABLE ASSY,RF:50 OHM COAX,8.25 L	80009	174-0819-00
W46	174-1227-01			CA ASSY,SP,ELEC:8 COND,5,26 AWG,RIBBON	80009	174-1227-01
W47	174-1238-00			CABLE ASSY,RF:50 OHM COAX,16.5 L (OPTION 12 AND 14 ONLY)	TK2469	174-1238-00
W48	174-1237-00			CABLE ASSY,RF:50 OHM COAX,12.5 L (OPTION 12 AND 14 ONLY)	TK2469	174-1237-00
W50	174-1533-00			CABLE ASSY,RF:50 OHM	80009	174-1533-00
W51	174-2077-00			CABLE ASSY,RF:50 OHM COAX,SEMI RIGID (OPTION 15 ONLY)	80009	174-2077-00
W52	174-2083-00			CABLE ASSY,RF:50 OHM COAX,SEMI RIGID,13.0L (OPTION 04 ONLY)	80009	174-2083-00
W53	174-2084-00			CABLE ASSY,RF:50 OHM COAX,SEMI RIGID,20.0L (OPTION 04 ONLY)	80009	174-2084-00
W54	174-2141-00			CA ASSY,SP,ELEC:10,28 AWG,5.0 L,FLAT,W/STRA IN RELIEF (OPTION 04 ONLY)	80009	174-2141-00
W54	174-1617-00			CA ASSY,SP,ELEC:10,28 AWG,9.5 L,RIBBON (OPTION 12 AND 14 ONLY)	80009	174-1617-00
W55	174-1811-00			CABLE ASSY,RF:50 OHM COAX,DUAL SHLD,18.0 L, SMB X LUG,TIP TIN (OPTION 04 ONLY)	80009	174-1811-00
W55	174-1617-00			CA ASSY,SP,ELEC:10,28 AWG,9.5 L,RIBBON (OPTION 12 AND 14 ONLY)	80009	174-1617-00
W56	174-1822-00			CA ASSY,SP,ELEC:24,24 AWG,16.0 L,RIBBON,PNL MT X 2 X 12 RCPT	80009	174-1822-00
W56	174-2395-00	B010100	B011028	CA ASSY,SP,ELEC:10,28 AWG,14.750 L	80009	174-2395-00
W56	174-2395-01	B011029		CA ASSY,SP,ELEC:10,28 AWG,14.750 L (OPTION 08 ONLY)	80009	174-2395-01
W58	174-0966-00			CABLE ASSY,RF:50 OHM,14.525 L,SEMI RIGID (OPTION 15 ONLY)	80009	174-0966-00

DIAGRAMS

Table of Contents

DIAGRAMS AND CIRCUIT BOARDS

Section 10 DIAGRAMS

BLOCK DIAGRAM **B1**
* **A18** — Step Attenuator (Front & Back) & **A16** — 1st Convertor
1ST CONVERTER and ATTENUATOR **S1**
* **A14A1** — RF Mother Board
RF MOTHER BOARD and 2nd LO **S2a**
* **A14A2** — Locked 2nd LO Board
Locked 2nd LO **S2b**
* **A17A1** — 1st LO Buffer Amp Board & **A19A1** — 1st LO Interface Board (Front & Back)
1st LO BUFFER AMP & 1st LO INTERFACE **S3**
* **A21** — Reference Osciillator Board
REFERENCE OSCILLATOR **S4**
* **A12A1** — Phase lock CFC Board (Front & Back)
A12A2 — HF VCO Board & **A12A3** — LF VCO Board
PHASE LOCK CENTER FREQUENCY CONTROL **S5a**
PHASE LOCK CENTER FREQUENCY CONTROL **S5b**
PHASE LOCK CENTER FREQUENCY CONTROL **S5C**
* **A13A1** — VR Board (Front)
A13A1 — VR Board (Back)
VR BOARD **S6a**
VR FILTER SELECTOR **S6b**
* **A22** — 300 Hz Bandpass Filter Board (Front & Back)
300 HZ BANDPASS FILTER **S6c**
* **A23** — RF Options Board
RF OPTIONS **S6d**
* **A7** — Log Board (Front)
A7 — Log Board (Back)
LOG BOARD **S8a**
LOG BOARD **S8b**
* **A9** — Display Storage Board (Front)
A9 — Display Storage Board (Back)
DISPLAY STORAGE **S9a**
DISPLAY STORAGE **S9b**
* **A10** — Microprocessor Board (Front)
A10 — Microprocessor Board (Back)
MICROPROCESSOR **S10a**
MICROPROCESSOR **S10b**
* **A25** — GPIB Board
GPIB **S11a**
* **A11** RS-232 Board
RS-232 **S11b**
* **A5** Sweep Board (Front)
SWEEP **S12**
* **A6** — Front Panel Board
FRONT PANEL **S13**
* **A15** — Power Supply Board (Front)
A15 — Power Supply (Back)
POWER SUPPLY (PRIMARY & SECONDARIES) **S14a**
POWER SUPPLY (DISPLAY) **S14b**
POWER SUPPLY (INTERCONNECT & SERIAL I/O) **S14c**
A15A1 – POWER SUPPLY Front (sections A and B)
A15A1 – POWER SUPPLY Front (sections C and D)
A15A1 – POWER SUPPLY Back (sections A and B)
A15A1 – POWER SUPPLY Back (sections C and D)
SIGNAL INTERCONNECT <0>
PWM/LINE FILTER <1>
SWITCHER/SECONDARIES <2>
VERT DEFLECTION AMPLIFIER <3>

* These boards can be found on the back of the preceding diagrams.

Table of Contents (Cont.)

DIAGRAMS AND CIRCUIT BOARDS

Section 10 DIAGRAMS

A15A1 – POWER SUPPLY (Cont.)
HORIZ DEFLECTION AMPLIFIER AND BLANKING <4>
HV REGULATOR AND CRT BIASING <5>
I/O SUBSYSTEM <6>
CONNECTORS A <7>
CONNECTORS B <8>
* **A24A3** — TG Isolation Amps Board
TG ISOLATION AMPLIFIERS **S15a**
* **A24A2** — TG Phase Lock Loop Board
TG PHASE LOCK LOOP **S15b**
* **A24A4** — TG Amplifier Board
TG AMPLIFIER **S15c**
* **A24A1** — TG Interface Board
TG INTERFACE **S15d**

* These boards can be found on the back of the preceding diagrams.

DIAGRAMS AND CIRCUIT BOARD ILLUSTRATIONS

Symbols

Graphic symbols and class designation letters are based on ANSI Standard Y32.2–1975.

Logic symbols are based on ANSI/IEEE 91–1984. Logic symbols show the logic function performed and may differ from the manufacturer's data.

Abbreviations are based on ANSI Y1.1–1972.

Other ANSI standards used in diagrams are:

Y14.15–1966	Drafting Practices.
Y14.2–1973	Line Conventions and Lettering.
Y10.5–1975	Letter Symbols for Quantities Used in Electrical Science and Electrical Engineering.

American National Standard Institute
1430 Broadway
New York, New York 10018

Component Values

Electrical components shown on the diagrams are in the following units unless noted otherwise:

Capacitors = Values one or greater are in picofarads (pF). Values less than one are in microfarads (μF).

Resistors = Ohms (Ω).

Assembly and Circuit Numbering

Each assembly and subassembly are assigned assembly numbers. The assembly number appears on the circuit board outline on the diagram, in the title for the circuit board illustration, and in the corresponding lookup table.

The Replaceable Electrical Parts list prefixes the circuit numbers with the corresponding assembly and subassembly numbers.

EXAMPLE: R2080 on assembly A20 becomes A20R2080.

EXAMPLE: U1044 on subassembly A1 of assembly A36 is found in the electrical parts list as A36A1U1044.

Grid Coordinates

The schematic diagrams and circuit board illustrations are labeled with horizontal and vertical grids. Lookup tables with the grid coordinates are provided as a cross reference to help locate components on the corresponding schematic and circuit board.

Sample Diagram

The following sample diagram labels various details found on schematic diagrams.

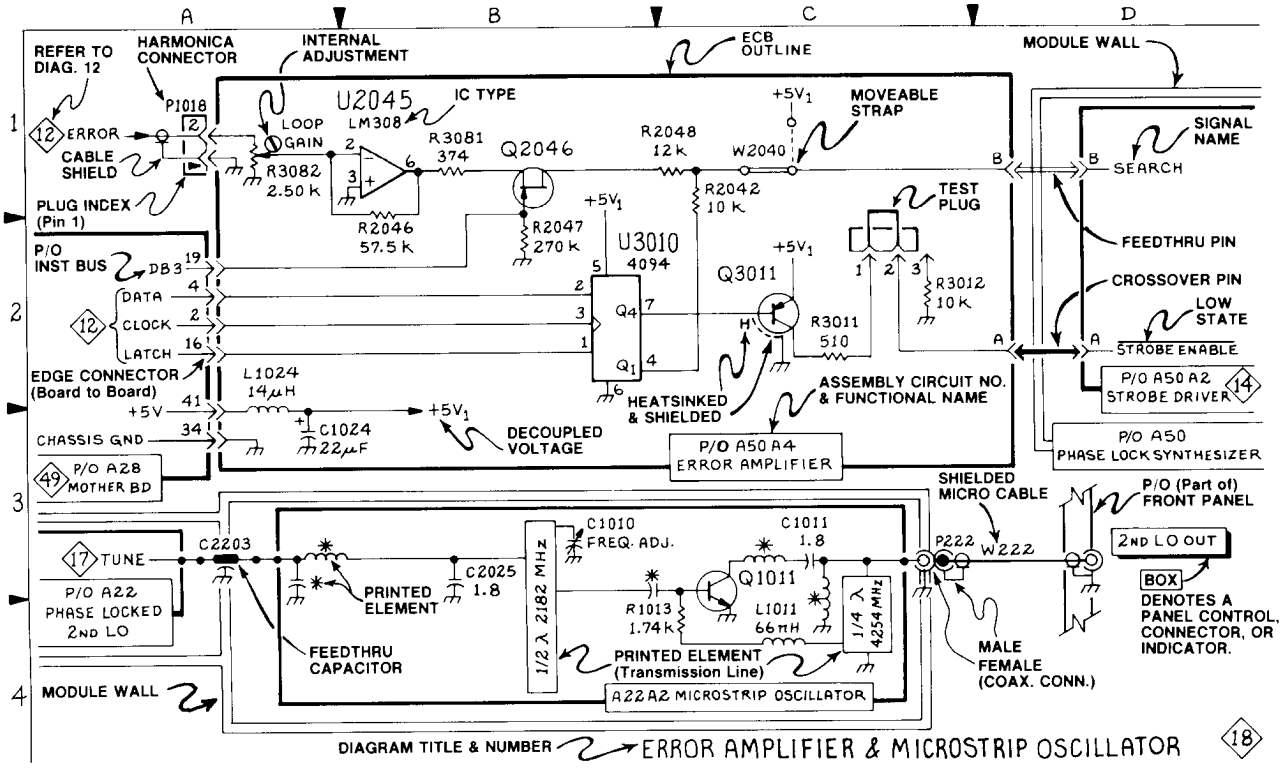

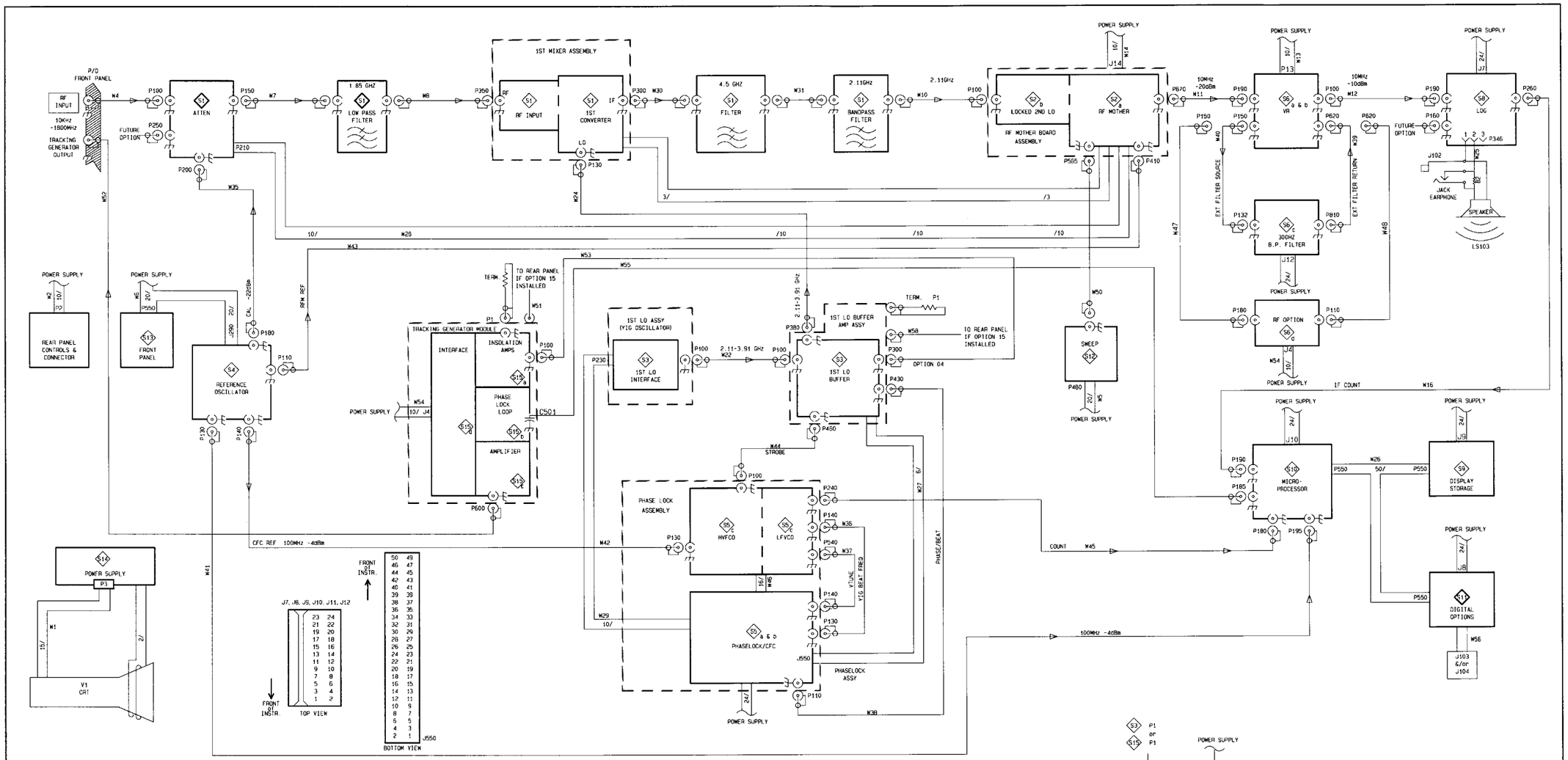

PIN #	J1 CRT SKT	J2 TO RPANL,POTS	J3 TO REAR CON	J4 TG	J5 SWEEP	J6 FRONT PNL	J7 LOG	J8 RS232/GPIB	J9 DISP STOR	J10 μPROC	J11 PL/CFC	J12 300HZ	J13 VR	J14 RF MOTHER
1	CRT-12	EXTSYNC	EXTVID	DATAI	SWPGND	CRTINTS-	SWSLOPE	--------	SWP	DETVID	SWSLOPE	SINSLOPE	SYSRST-	SYSRST-
2	CRT-11	TR +10V	SWPGATE	VLVL	SWP	TLVL	LOGVID	--------	LOGVID	--KEYED--	+20V	+20V	DATAI	--KEYED--
3	CRT-10	TR CENTER	GND	+20V	VIDMON	DATAI	--------	--------	SWPGATE	SWPGATE	SWPGND	SWPGND	--------	+20V
4	CRT-9	TR -11V	SWP	CLKO	VIDZ	FPACK-	SYSRST-	SYSRST-	SYSRST-	POK	SWP	SWP	CLKO	CLKO
5	CRT-8	VP -5V1	LOGVID	DATAO	VIDVERT	--KEYED--	FLAT	--------	POK	REQI-	--------	--------	DATAO	DATAO
6	CRT-7	VP CENTER	JP832	+10V	TLVL	CLKI-	RFOPTVID	DOAUD	RDEN-	UPAUD	SWPGATE	SWPGATE	+10V	+10V
7	CRT-6	VP GND	DATAI	JP840 A15	SWPGATE	VLVL	--------	--------	--------	CLKI-	CLKI-	CLKI-	--------	+5V
8	CRT-5	HP +5V1	JP831 A15	GND	CLKO	REFLATCH-	CLKO	CLKO	CLKO	CLKO	CLKO	CLKO	GND	GND
9	--------	HP CENTER	JP830 A15	-11V	--KEYED--	--------	DATAI	DATAI	--------	DATAI	DATAI	DATAI	-11V	-11V
10	--------	HP -5V1	--KEYED--	TGLATCH-	DATAO	--------	DATAO	DATAO	DATAO	DATAO	DATAO	DATAO	VRLATCH-	RFLATCH-
11			VLVL		+10V	--------	+10V	+10V	+10V	ACKI-	+10V	+10V		
12			JP840 A15		VLVL	-11V	+10V	+10V	+10V	LOAD-	+10V	+10V		
13					+5V	+10V	+5V	+5V	+5V	+5V	+5V	+5V		
14					SSTRIG	+5V	+5V	+5V	+5V	+5V	+5V	+5V		
15					GND	GND	GND	GND	GND	GND	GND	GND		
16					LINETRIG	GND	GND	GND	GND	GND	GND	GND		
17					-11V	CLKO	-11V	-11V	-11V	ADO0	-11V	-11V		
18					EXTRIG	DATAO	LGLATCH-	DOLATCH-	--------	ADI1	CFCLATCH-	JP790 A15		
19					SWLATCH-	FPLATCH-	QPAUD	--------	DSBLANK-	ADI0	CFCACK-	CFCACK-		
20					LOGVID	FPREQ-								
21							EXTVID	--------	DSSEL-	ADI2	CFCREQ-	CFCREQ-		
22							AUDIO	--------	--------	ADO2	--------	--------		
23							DETVID	--------	DSVER	SSTRIG	--------	--------		
24							VLVL	--------	DSHOR	ADO3	--------	--------		
25														

REAR PANEL

J103 AUX SIGNALS	J104 RS232 DTE (MALE)	J104 GPIB	PIN #
EXTVID	CD	DIO1	1
GND	RXD	DIO2	2
LOGVID	TXD	DIO3	3
DATAI	DTR	DIO4	4
JP830 A15	SIGNAL GND	EOI	5
SWPGATE	DSR	DAV	6
SWP	RTS	NRFD	7
JP832 A15	CTS	NDAC	8
JP831 A15	RI	TFC	9
		SRQ	10
		ATN	11
		GND	12
		DIO5	13
		DIO6	14
		DIO7	15
		DIO8	16
		REN	17
		GND	18
		GND	19
		GND	20
		GND	21
		GND	22
		GND	23
		GND	24
			25

J550 S9, S10, S11

PIN #		PIN #	
1	GND	26	BA12
2	BCLK	27	BWT-
3	GND	28	BA11
4	BRD-	29	NO CONNECT
5	VCC	30	BA10
6	BWR-	31	NO CONNECT
7	VCC	32	BA9
8	BIO/M-	33	IRA
9	BRST-	34	BA6
10	BWAIT-	35	IRA
11	BD7	36	BA7
12	BA19	37	NO CONNECT
13	BD6	38	BA6
14	BA18	39	WPROG
15	BD5	40	BA5
16	BA17	41	ROMVCC
17	BD4	42	BA4
18	BA16	43	VCC
19	BD3	44	BA3
20	BA15	45	VCC
21	BD2	46	BA2
22	BA14	47	GND
23	BD1	48	BA1
24	BA13	49	GND
25	BD0	50	BA0

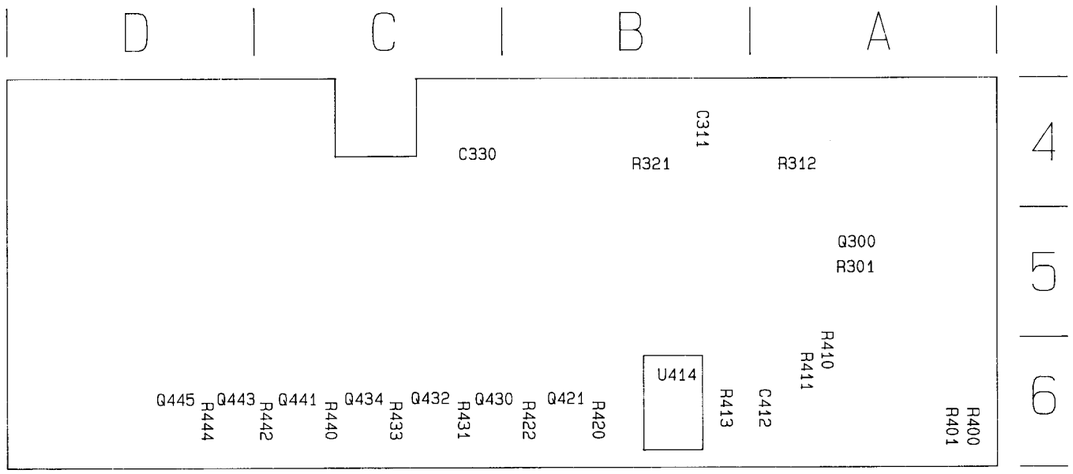

A18–Step Attenuator (Rear)

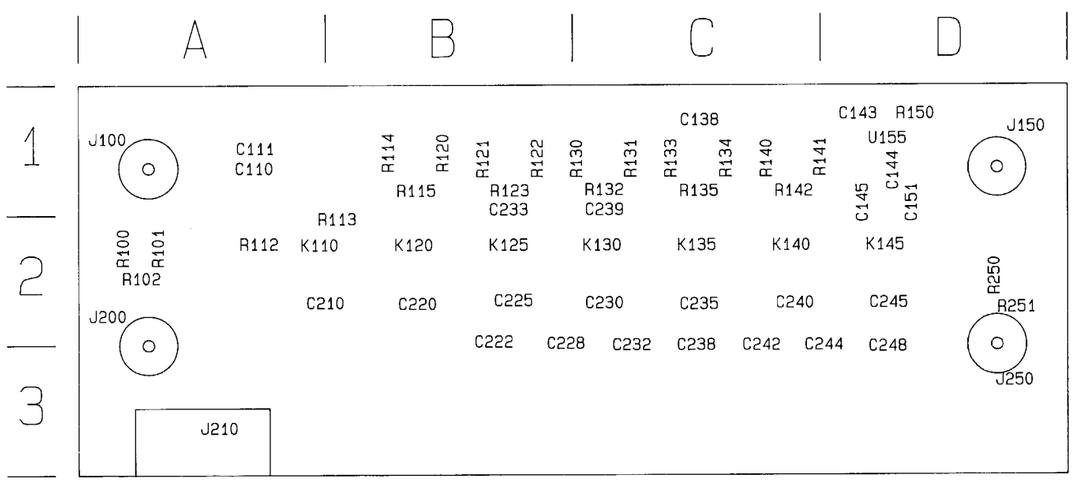

A18–Step Attenuator (Front)

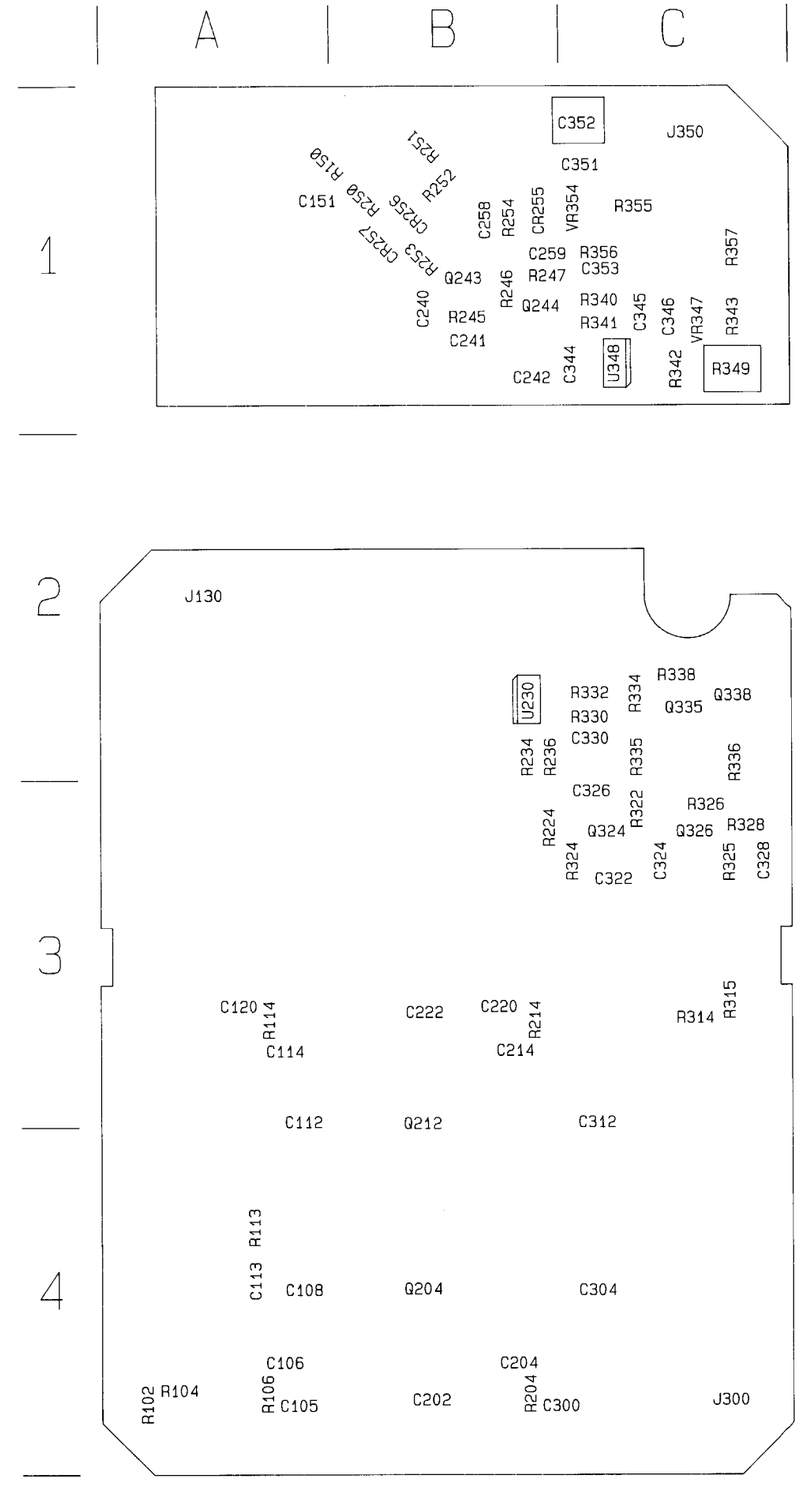

A16–1st Converter

ATTENUATOR

S1

CIRCUIT NUMBER	SCHEMATIC LOCATION	BOARD LOCATION	CIRCUIT NUMBER	SCHEMATIC LOCATION	BOARD LOCATION	CIRCUIT NUMBER	SCHEMATIC LOCATION	BOARD LOCATION
C110	B-9	A-1	J210	A-6	A-3	R131	G-9	C-1
C111	B-9	A-1	J250	J-9	D-3	R132	G-9	C-1
C138	I-10	C-1	K110	D-8	A-2	R133	H-9	C-1
C143	J-10	D-1	K120	E-8	B-2	R134	H-9	C-1
C144	J-10	D-1	K125	F-8	B-2	R135	H-9	C-1
C145	I-9	D-1	K130	G-8	C-2	R140	H-9	C-1
C151	J-9	D-1	K135	H-8	C-2	R141	I-9	C-1
C210	D-8	B-2	K140	I-8	C-2	R142	I-9	C-1
C220	E-8	B-2	K145	J-8	D-2	R150	J-10	D-1
C222	D-8	B-3	Q300	C-7	A-5	R250	J-9	D-2
C225	F-8	B-2	Q421	D-7	B-6	R251	J-9	D-2
C228	E-8	B-3	Q430	E-7	C-6	R301	B-7	A-5
C230	G-8	C-2	Q432	F-7	C-6	R312	H-10	A-4
C232	F-8	C-3	Q434	G-7	C-6	R321	H-10	B-4
C233	F-9	B-1	Q441	H-7	C-6	R400	B-7	A-6
C235	H-8	C-2	Q443	I-7	D-6	R401	B-7	A-6
C238	G-8	C-3	Q445	J-7	D-6	R410	B-6	A-6
C239	G-9	C-1	R100	C-9	A-2	R411	C-8	A-6
C240	I-8	C-2	R101	C-9	A-2	R413	C-7	B-6
C242	H-8	C-3	R102	C-8	A-2	R420	D-7	B-6
C244	I-8	D-3	R112	D-9	A-2	R422	E-7	B-6
C245	J-8	D-2	R113	D-9	B-2	R431	F-7	C-6
C248	J-8	D-3	R114	E-9	B-1	R433	F-7	C-6
C311	H-10	B-4	R115	E-9	B-1	R440	G-7	C-6
C330	I-10	C-4	R120	E-9	B-1	R442	H-7	D-6
C412	C-6	A-6	R121	F-9	B-1	R444	I-7	D-6
J100	A-9	A-1	R122	F-9	B-1	U155	J-10	D-1
J150	J-8	D-1	R123	F-9	B-1	U414	C-7	B-6
J200	A-8	A-2	R130	G-9	C-1			

1ST CONVERTER

S1

CIRCUIT NUMBER	SCHEMATIC LOCATION	BOARD LOCATION	CIRCUIT NUMBER	SCHEMATIC LOCATION	BOARD LOCATION	CIRCUIT NUMBER	SCHEMATIC LOCATION	BOARD LOCATION
C105	F-2	A-4	C353	D-1	C-1	R251	C-3	B-1
C106	F-2	A-4	CR130	E-3	N/A	R252	D-2	B-1
C108	F-2	A-4	CR255	C-3	B-1	R253	D-3	B-1
C112	F-3	A-3	CR256	D-3	B-1	R254	C-3	B-1
C113	F-3	A-4	CR257	D-3	B-1	R314	H-3	C-3
C114	F-3	A-3	J130	H-1	A-2	R315	H-3	C-3
C120	F-3	A-3	J300	H-2	C-4	R322	G-4	C-3
C151	D-2	A-1	J350	B-2	C-1	R324	G-5	C-3
C202	G-1	B-4	Q204	G-2	B-4	R325	F-5	C-3
C204	G-2	B-4	Q212	G-3	B-3	R326	F-4	C-3
C214	G-3	B-3	Q243	D-3	B-1	R328	F-5	C-3
C220	G-2	B-3	Q244	D-2	B-1	R330	E-4	C-2
C222	G-2	B-3	Q324	H-5	C-3	R332	E-4	C-2
C240	D-3	B-1	Q326	F-5	C-3	R334	F-4	C-2
C241	D-3	B-1	Q335	F-3	C-2	R335	G-4	C-2
C242	D-2	B-1	Q338	F-4	C-2	R336	F-4	C-2
C258	D-3	B-1	R102	F-2	A-4	R338	F-3	C-2
C259	D-1	B-1	R104	F-2	A-4	R340	D-1	C-1
C300	G-1	B-4	R106	F-1	A-4	R341	D-1	C-1
C304	H-2	C-4	R113	F-3	A-4	R342	C-2	C-1
C312	H-3	C-3	R114	F-2	A-3	R343	C-2	C-1
C322	H-5	C-3	R150	D-2	A-1	R349	C-2	C-1
C324	F-5	C-3	R204	G-1	B-4	R355	C-3	C-1
C326	G-4	C-3	R214	G-3	B-3	R356	D-1	C-1
C328	F-4	C-3	R224	G-5	B-3	R357	C-1	C-1
C330	E-4	C-2	R234	D-4	B-2	U230	E-4	B-2
C344	D-1	C-1	R236	E-4	B-2	U230A	D-5	N/A
C345	D-2	C-1	R245	D-3	B-1	U348	D-2	C-1
C346	D-2	C-1	R246	D-3	B-1	VR347	C-2	C-1
C351	C-2	C-1	R247	D-1	B-1	VR354	C-3	C-1
C352	C-3	C-1	R250	D-2	B-1			

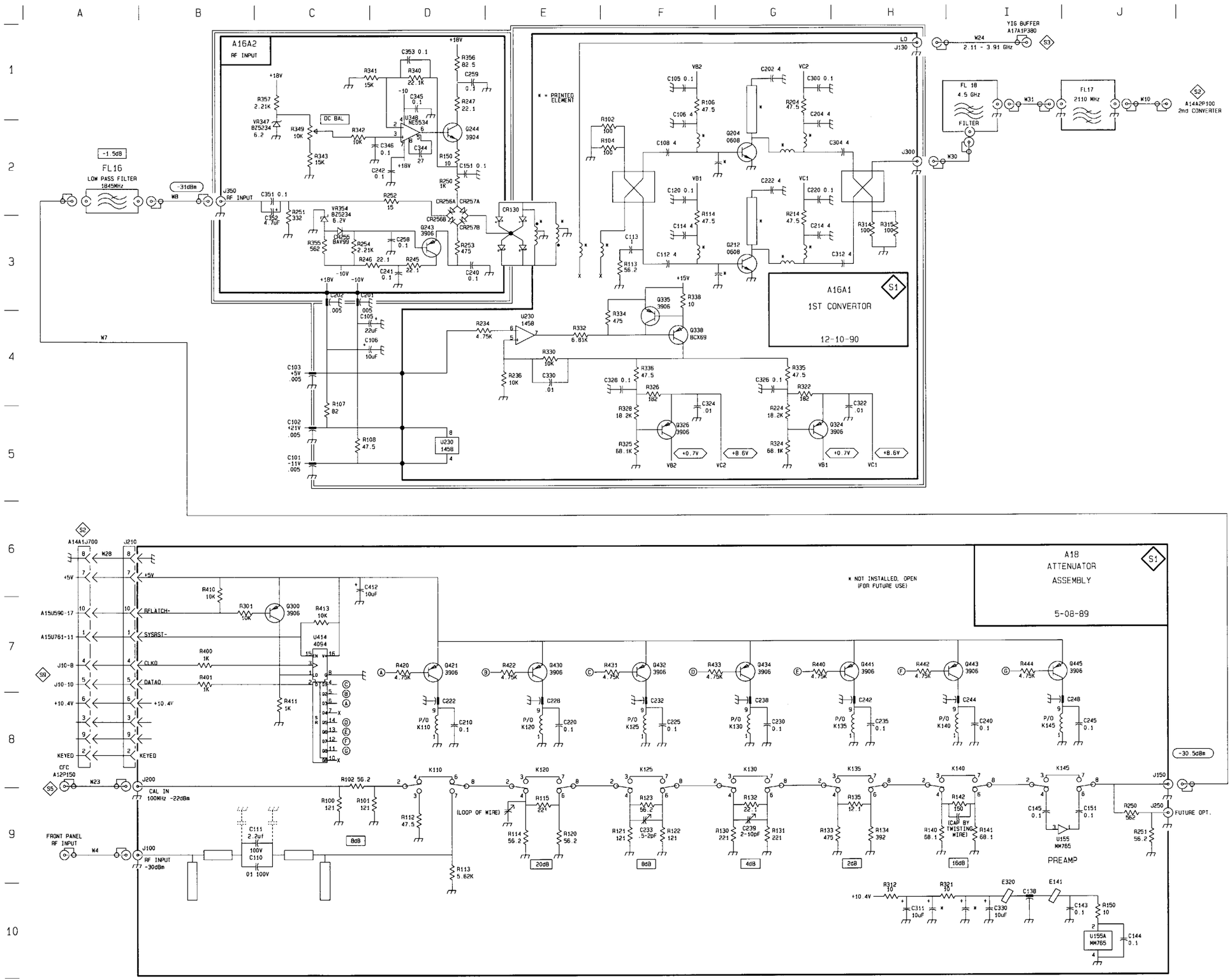

1ST CONVERTER AND ATTENUATOR S1

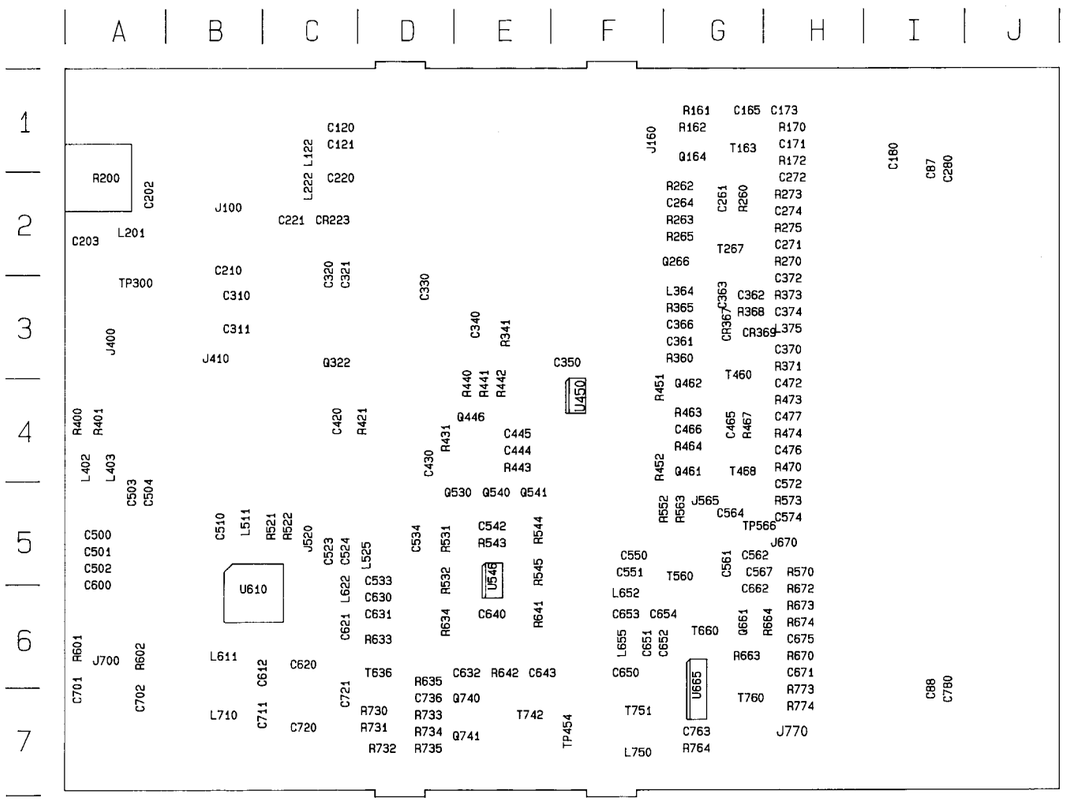

A14A1–RF Mother Board

RF MOTHER BOARD

S2
a

CIRCUIT NUMBER	SCHEMATIC LOCATION	BOARD LOCATION	CIRCUIT NUMBER	SCHEMATIC LOCATION	BOARD LOCATION	CIRCUIT NUMBER	SCHEMATIC LOCATION	BOARD LOCATION
C87	F-2	I-2	C651	I-4	F-6	R371	E-2	H-3
C88	H-2	I-7	C652	I-4	F-6	R373	C-1	H-3
C120	J-7	C-1	C653	I-4	F-6	R400	J-5	A-4
C121	J-7	C-1	C654	J-3	F-6	R401	J-5	A-4
C165	A-1	G-1	C662	I-2	G-6	R421	H-6	D-4
C171	A-1	H-1	C671	I-1	H-6	R431	H-6	D-4
C173	B-3	H-1	C675	J-2	H-6	R440	H-5	E-4
C180	F-2	I-1	C701	J-4	A-7	R441	H-5	E-4
C202	A-6	A-2	C702	J-4	A-7	R442	H-5	E-4
C203	B-6	A-2	C711	A-7	C-7	R443	D-3	E-4
C210	A-4	B-2	C720	B-7	C-7	R451	D-2	F-4
C220	J-7	C-2	C721	B-8	C-7	R452	F-2	F-4
C221	I-7	C-2	C736	D-6	D-7	R463	E-2	G-4
C261	A-1	G-2	C763	H-4	G-7	R464	E-2	G-4
C264	C-2	C-2	C780	H-1	I-7	R467	E-2	G-4
C271	B-1	H-2	CR223	I-6	C-2	R470	F-2	H-4
C272	A-1	H-2	CR367	D-3	G-3	R473	D-1	H-4
C274	B-1	H-2	CR369	C-2	G-3	R474	E-2	H-4
C280	F-2	I-2	FL180	G-1	I-4	R521	C-8	C-5
C310	H-8	B-3	J100	A-5	B-2	R522	C-8	C-5
C311	G-8	B-3	J160	A-1	F-1	R531	C-4	D-5
C320	I-6	C-2	J400	A-5	A-3	R532	B-3	D-5
C321	I-7	C-2	J410	A-7	B-3	R543	B-4	E-5
C330	I-6	D-3	J520	F-8	C-5	R544	D-4	E-5
C340	G-5	E-3	J565	J-1	G-5	R545	B-3	E-5
C350	C-5	F-3	J670	J-2	H-5	R552	J-1	F-5
C361	E-3	G-3	J700	J-4	A-6	R563	J-1	G-5
C362	C-3	G-3	J770	I-1	H-7	R570	J-2	H-5
C363	C-1	G-3	L122	J-7	C-1	R573	E-1	H-5
C366	D-3	G-3	L201	A-6	A-2	R601	J-4	A-6
C370	D-2	H-3	L222	I-7	C-2	R602	J-4	A-6
C372	B-1	H-3	L364	C-3	G-3	R633	B-7	D-6
C374	C-1	H-3	L375	C-1	H-3	R634	B-3	D-6
C420	G-7	C-4	L402	J-5	A-4	R635	D-6	D-6
C430	H-6	D-4	L403	J-5	A-4	R641	A-4	E-6
C444	D-4	E-4	L511	B-8	B-5	R642	D-5	E-6
C445	C-3	E-4	L525	A-7	D-5	R663	I-4	G-6
C465	D-2	G-4	L611	A-6	B-6	R664	I-2	H-6
C466	F-2	G-4	L622	A-7	C-6	R670	I-1	H-6
C472	D-1	H-4	L652	J-3	F-6	R672	J-2	H-6
C476	E-2	H-4	L655	I-4	F-6	R673	I-2	H-6
C477	D-1	H-4	L710	A-7	B-7	R674	J-2	H-6
C500	J-5	A-5	L750	G-3	F-7	R730	C-6	D-7
C501	J-5	A-5	Q164	A-2	G-2	R731	C-6	D-7
C502	J-5	A-5	Q266	B-2	G-2	R732	C-6	D-7
C503	J-3	A-5	Q322	H-7	C-3	R733	D-6	D-7
C504	J-3	A-5	Q446	H-5	E-4	R734	D-6	D-7
C510	B-8	B-5	Q461	E-2	G-4	R735	C-6	D-7
C523	A-7	C-5	Q462	D-2	G-4	R764	H-4	G-7
C524	A-7	C-5	Q530	C-3	E-5	R773	H-2	H-7
C533	A-7	D-5	Q540	D-3	E-5	R774	H-3	H-7
C534	A-4	D-5	Q541	D-3	E-5	T163	A-1	G-1
C542	B-4	E-5	Q661	I-2	G-6	T267	B-1	G-2
C550	J-3	F-5	Q740	D-6	E-7	T460	D-2	G-3
C551	J-3	F-5	Q741	D-6	E-7	T468	E-2	G-4
C561	I-1	G-5	R161	B-2	G-1	T560	I-2	G-5
C562	J-2	G-5	R162	A-3	G-1	T636	B-7	D-6
C564	J-1	G-5	R170	B-2	H-1	T660	I-4	G-6
C567	J-2	G-5	R172	A-1	H-1	T742	D-5	E-7
C572	E-1	H-5	R200	A-4	A-2	T751	H-3	F-7
C574	E-1	H-5	R260	B-1	G-2	T760	H-2	G-7
C600	J-6	A-6	R262	B-2	G-2	TP300	H-8	A-3
C612	A-6	C-6	R263	B-2	G-2	TP454	D-5	F-7
C620	B-6	C-6	R265	C-2	G-2	TP566	F-2	G-5
C621	B-7	C-6	R270	B-1	H-2	U450	C-5	F-4
C630	B-7	D-6	R273	B-2	H-2	U546	B-4	E-5
C631	B-7	D-6	R275	C-2	H-2	U546A	B-4	E-5
C632	D-5	E-6	R341	H-5	E-3	U546B	B-4	E-5
C640	B-4	E-6	R360	D-3	G-3	U610B	C-6	B-5
C643	D-5	E-6	R365	C-2	G-3	U610C	C-7	B-5
C650	H-3	F-6	R368	C-2	G-3	U610D	B-8	B-5
						U665	H-4	G-6

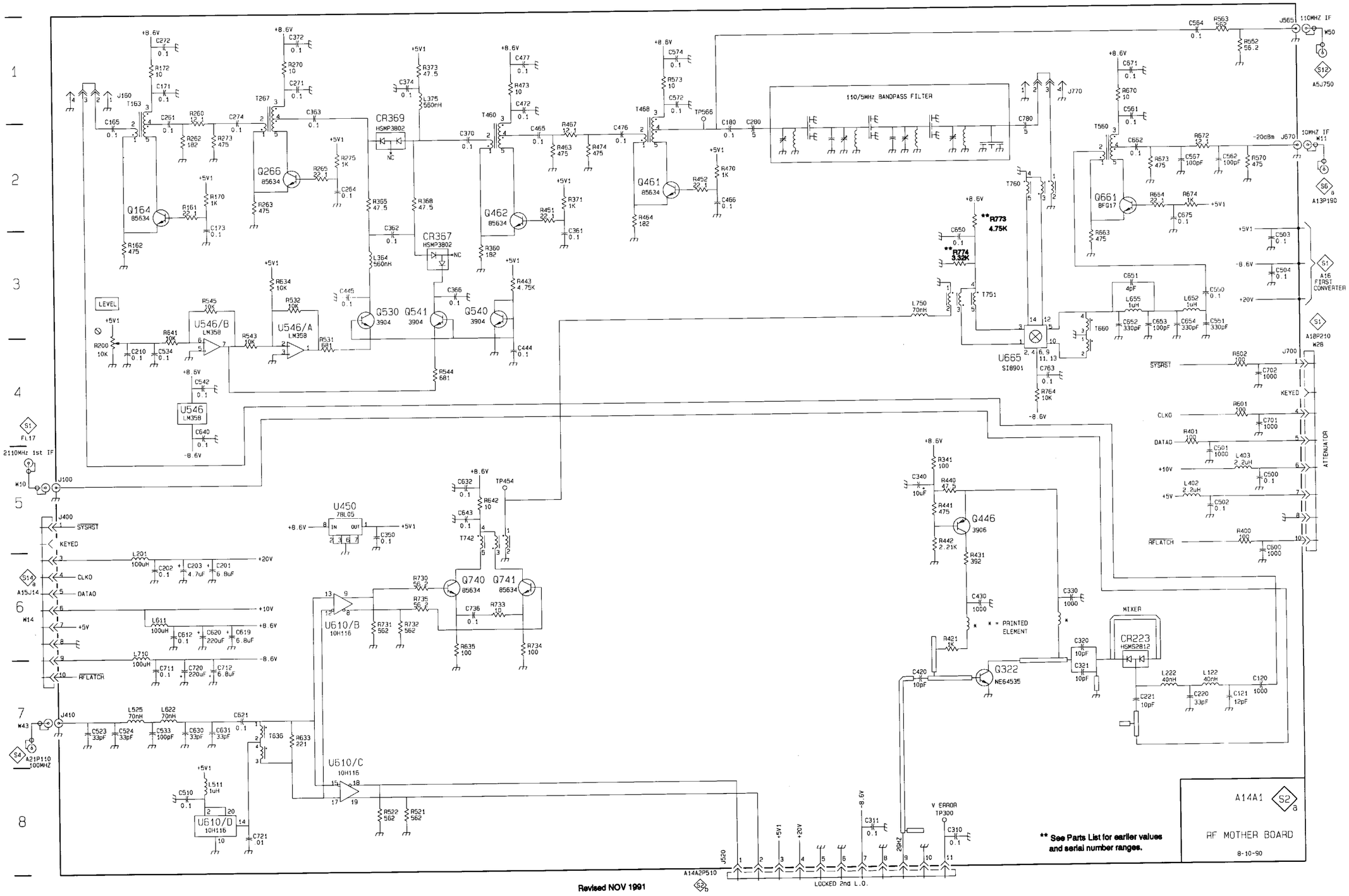
110/5MHz BANDPASS FILTER
110MHZ IF
10MHZ IF
-20dBm
A5J750
A13P190
A16 FIRST CONVERTER
A18P210
ATTENUATOR
2110MHz 1st IF
A21P110 100MHZ
A15J14
A14A2P510
LOCKED 2nd L.O.
MIXER
* = PRINTED ELEMENT
** See Parts List for earlier values and serial number ranges.
A14A1
RF MOTHER BOARD
8-10-90
Revised NOV 1991

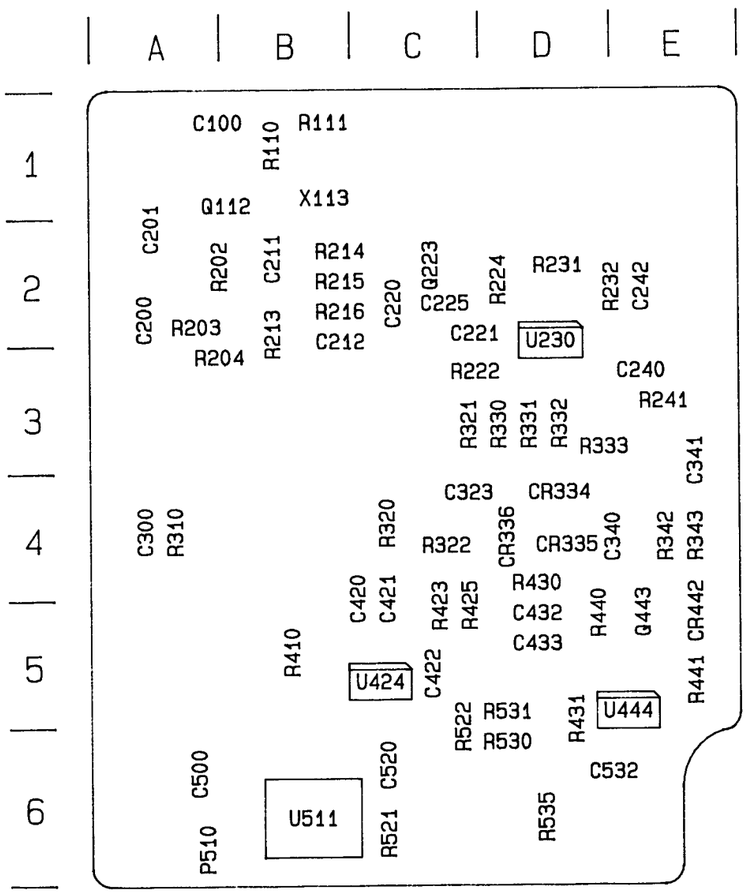

A14A2–Locked 2nd LO Board

LOCKED 2nd LO

S2 b

CIRCUIT NUMBER	SCHEMATIC LOCATION	BOARD LOCATION	CIRCUIT NUMBER	SCHEMATIC LOCATION	BOARD LOCATION	CIRCUIT NUMBER	SCHEMATIC LOCATION	BOARD LOCATION
C100	C-3	A-1	CR336	C-2	D-4	R330	C-1	D-3
C200	C-4	A-2	CR442	C-2	E-5	R331	C-1	D-3
C201	C-4	A-2	P510	E-1	A-6	R332	C-1	D-3
C211	C-3	B-2	Q112	C-4	A-1	R333	D-1	D-3
C212	D-3	B-2	Q223	E-4	C-2	R342	D-2	E-4
C220	E-3	C-2	Q443	D-2	E-5	R343	E-2	E-4
C221	D-1	C-2	R110	C-3	B-1	R410	B-3	B-5
C225	E-4	C-2	R111	C-3	B-1	R423	B-3	C-5
C240	E-1	E-3	R202	C-4	A-2	R425	C-2	C-5
C242	E-3	E-2	R203	D-4	A-2	R430	D-2	D-4
C300	E-2	A-4	R204	B-4	A-3	R431	B-2	D-5
C323	C-2	C-4	R213	C-3	B-2	R440	C-3	D-5
C340	C-3	E-4	R214	D-4	B-2	R441	C-2	E-5
C341	E-2	E-3	R215	D-3	B-2	R521	A-3	C-6
C420	B-4	C-5	R216	D-3	B-2	R522	B-2	C-6
C421	B-3	C-5	R222	C-1	C-3	R530	B-2	D-6
C422	B-3	C-5	R224	E-4	D-2	R531	B-1	D-5
C432	D-2	D-5	R231	E-4	D-2	R535	B-2	D-6
C433	C-2	D-5	R232	E-4	D-2	U230	D-1	D-2
C500	E-1	A-6	R241	C-1	E-3	U230A	D-4	D-2
C520	A-3	C-6	R310	E-2	A-4	U230B	C-1	D-2
C532	B-2	D-6	R320	B-3	C-4	U424	B-3	C-5
CR334	D-1	D-4	R321	C-1	C-3	U444	C-2	E-5
CR335	D-3	D-4	R322	C-2	C-4	U511	A-3	B-6
						x113	C-3	B-1

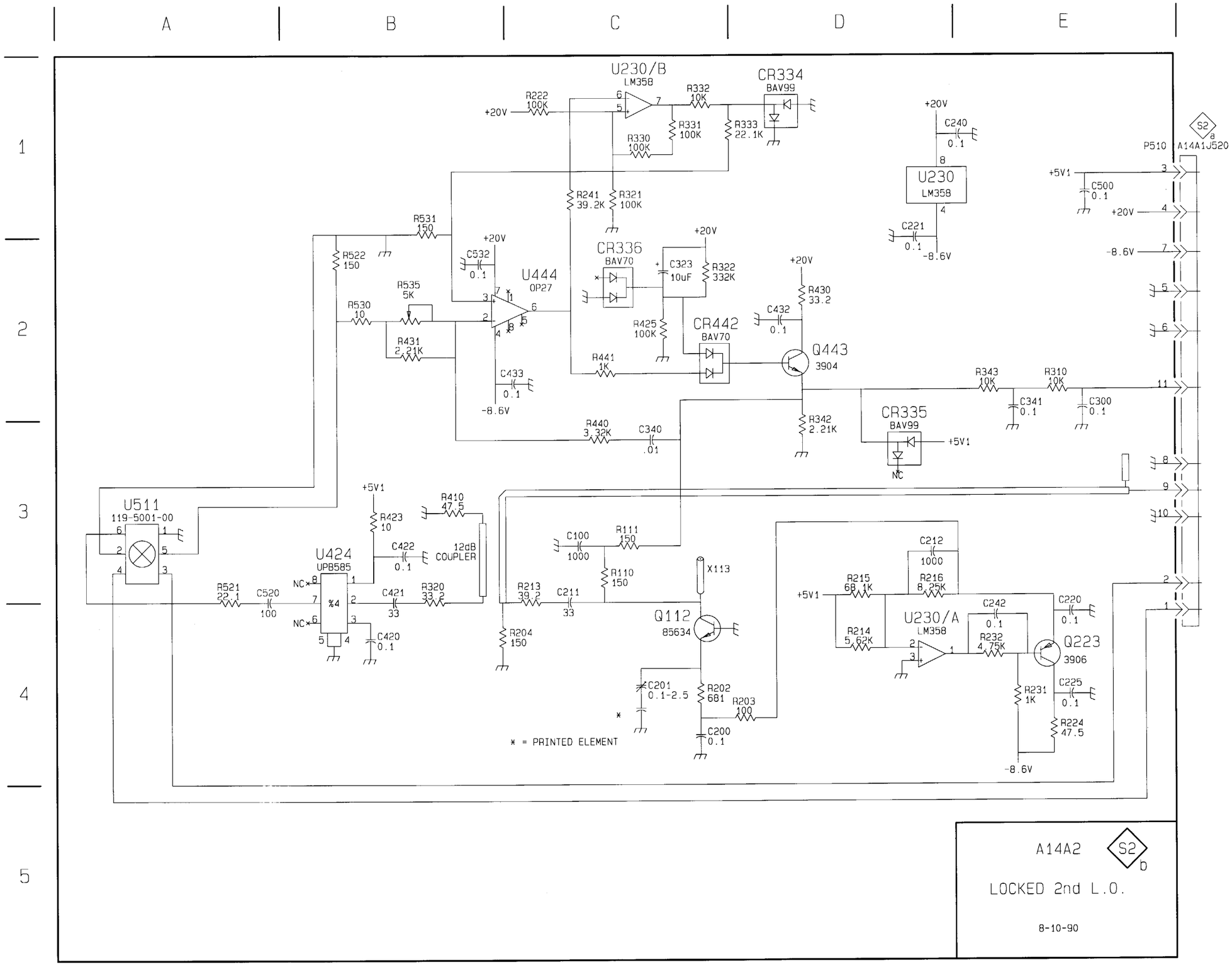
A
B
C
D
E
1
2
3
4
5
U230/B
LM358
R222
100K
+20V
R332
10K
CR334
BAV99
R331
100K
R333
22.1K
R330
100K
R241
39.2K
R321
100K
R531
150
R522
150
C532
0.1
U444
OP27
R535
5K
R530
10
R431
2.21K
C433
0.1
-8.6V
CR336
BAV70
C323
10uF
R322
332K
R425
100K
CR442
BAV70
R441
1K
R430
33.2
C432
0.1
Q443
3904
R342
2.21K
R440
3.32K
C340
.01
C240
0.1
U230
LM358
C221
0.1
-8.6V
P510
A14A1J520
S2
B
+5V1
C500
0.1
R343
10K
R310
10K
C341
0.1
C300
0.1
CR335
BAV99
+5V1
NC
U511
119-5001-00
R521
22.1
C520
100
U424
UPB585
NC
%4
+5V1
R423
10
R410
47.5
C422
0.1
12dB
COUPLER
C421
33
R320
33.2
C420
0.1
C100
1000
R111
150
R110
150
R213
39.2
C211
33
R204
150
X113
Q112
85634
C201
0.1-2.5
R202
681
R203
100
C200
0.1
* = PRINTED ELEMENT
C212
1000
R215
68.1K
R216
8.25K
R214
5.62K
U230/A
LM358
C242
0.1
R232
4.75K
C220
0.1
Q223
3906
R231
1K
C225
0.1
R224
47.5
-8.6V
A14A2
S2
D
LOCKED 2nd L.O.
8-10-90

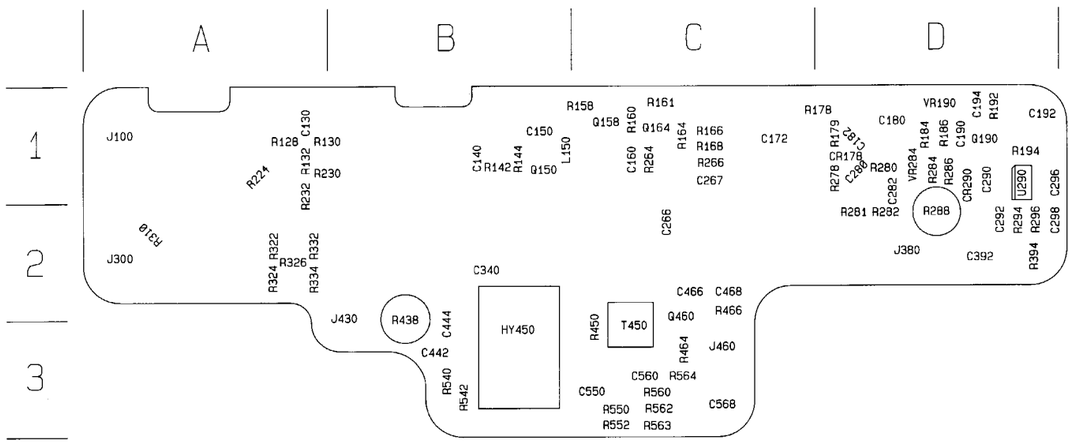

A17A1–1st LO Buffer Amp Board

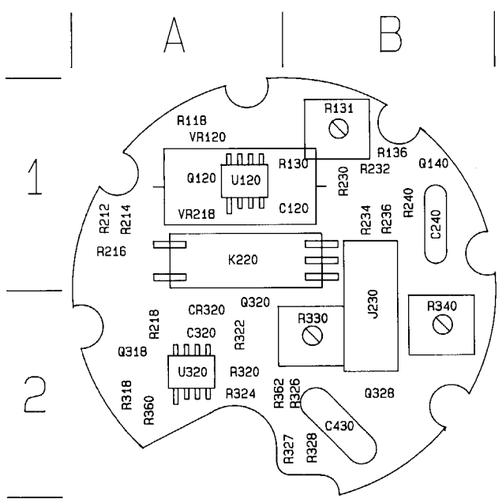

A19A1–1st LO Interface Board (Front)

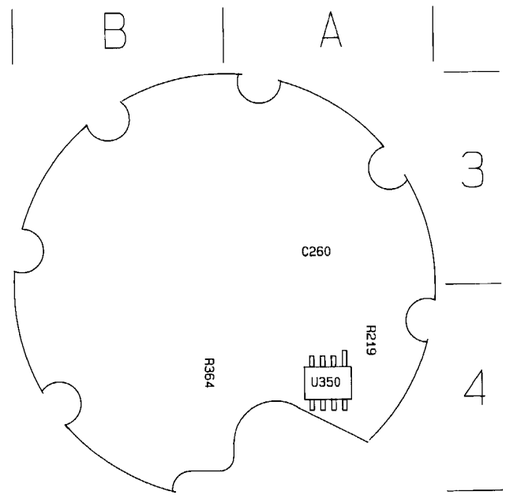

A19A1–1st LO Interface Board (Rear)

1st LO INTERFACE

S3

CIRCUIT NUMBER	SCHEMATIC LOCATION	BOARD LOCATION	CIRCUIT NUMBER	SCHEMATIC LOCATION	BOARD LOCATION	CIRCUIT NUMBER	SCHEMATIC LOCATION	BOARD LOCATION
C120	B-1	B-1	R136	C-3	B-1	R324	C-3	A-2
C240	C-4	B-1	R212	D-4	A-1	R326	C-3	B-2
C260B	D-3	BACK	R214	D-4	A-1	R327	B-2	B-2
C320	B-1	A-2	R216	D-4	A-1	R328	C-2	B-2
C430	C-3	B-2	R218	A-2	A-2	R330	D-3	B-2
CR320	A-1	A-2	R219B	A-2	BACK	R340	D-3	B-2
K220	B-1	A-1	R230	B-3	B-1	R360	A-3	A-2
P230	A-1	B-1	R232	C-3	B-1	R362	A-3	A-2
Q120	D-4	A-1	R234	B-4	B-1	R364B	A-3	BACK
Q140	C-3	B-1	R236	C-4	B-1	U120	B-3	A-1
Q318	B-2	A-2	R240	C-3	B-1	U320	B-3	A-2
Q320	A-1	A-2	R318	B-3	A-2	U350B	A-3	BACK
Q328	C-3	B-2	R320	C-3	A-2	VR120	B-1	A-1
R118	D-4	A-1	R322	A-1	A-2	VR218	B-1	A-1
R130	D-4	B-1						

1st LO BUFFER AMP

S3

CIRCUIT NUMBER	SCHEMATIC LOCATION	BOARD LOCATION	CIRCUIT NUMBER	SCHEMATIC LOCATION	BOARD LOCATION	CIRCUIT NUMBER	SCHEMATIC LOCATION	BOARD LOCATION
C130	H-5	A-1	J300	E-5	A-2	R280	F-4	D-1
C140	I-5	B-1	J380	J-6	D-2	R281	J-5	D-2
C142	I-5	B-1	J430	J-6	A-3	R282	J-5	D-2
C150	I-5	B-1	J460	E-6	C-3	R284	F-5	D-1
C152	I-5	B-1	L150	I-5	B-1	R286	G-4	D-1
C160	H-5	C-1	Q150	I-5	B-1	R288	G-5	D-2
C172	E-5	C-1	Q158	H-4	C-1	R294	F-4	D-2
C180	F-5	D-1	Q164	H-4	C-1	R296	G-4	D-2
C182	J-5	D-1	Q190	H-4	D-1	R310	F-6	A-2
C190	G-4	D-1	Q460	G-6	C-3	R322	H-6	A-2
C192	J-4	CHASSIS	R128	G-5	A-1	R324	H-6	A-2
C194	H-4	D-1	R130	G-5	A-1	R326	H-6	A-2
C266	J-6	C-2	R132	G-5	A-1	R332	H-5	A-2
C267	H-5	C-1	R142	I-5	B-1	R334	H-6	A-2
C280	J-5	D-1	R144	I-5	B-1	R394	F-3	D-2
C282	F-4	D-1	R158	I-5	B-1	R438	I-6	B-3
C290	F-4	D-1	R160	H-5	C-1	R450	H-6	C-3
C292	G-4	D-1	R164	H-4	C-1	R464	G-6	C-3
C296	G-4	D-1	R165	H-4	C-1	R466	G-6	C-3
C298	G-3	D-2	R166	G-4	C-1	R540	I-6	B-3
C392	F-3	D-2	R168	H-4	C-1	R542	I-6	B-3
C442	I-6	B-3	R178	F-5	C-1	R550	G-6	C-3
C444	I-6	B-3	R179	J-5	C-1	R552	G-6	C-3
C466	G-6	C-2	R184	F-5	D-1	R560	G-6	C-3
C468	H-6	C-2	R186	G-4	D-1	R562	G-6	C-3
C550	G-6	C-3	R194	G-4	D-1	R563	G-6	C-3
C560	G-6	C-3	R224	F-5	A-1	R564	F-6	C-3
C568	E-6	C-3	R230	G-5	A-1	T450	H-6	C-3
CR178	J-5	D-1	R232	G-5	A-1	U290	G-4	D-1
CR290	G-4	D-1	R264	G-5	C-1	VR190	G-4	D-1
HY450	H-6	B-3	R266	H-4	C-1	VR284	F-5	D-1
J100	E-5	A-1	R278	J-5	D-1			

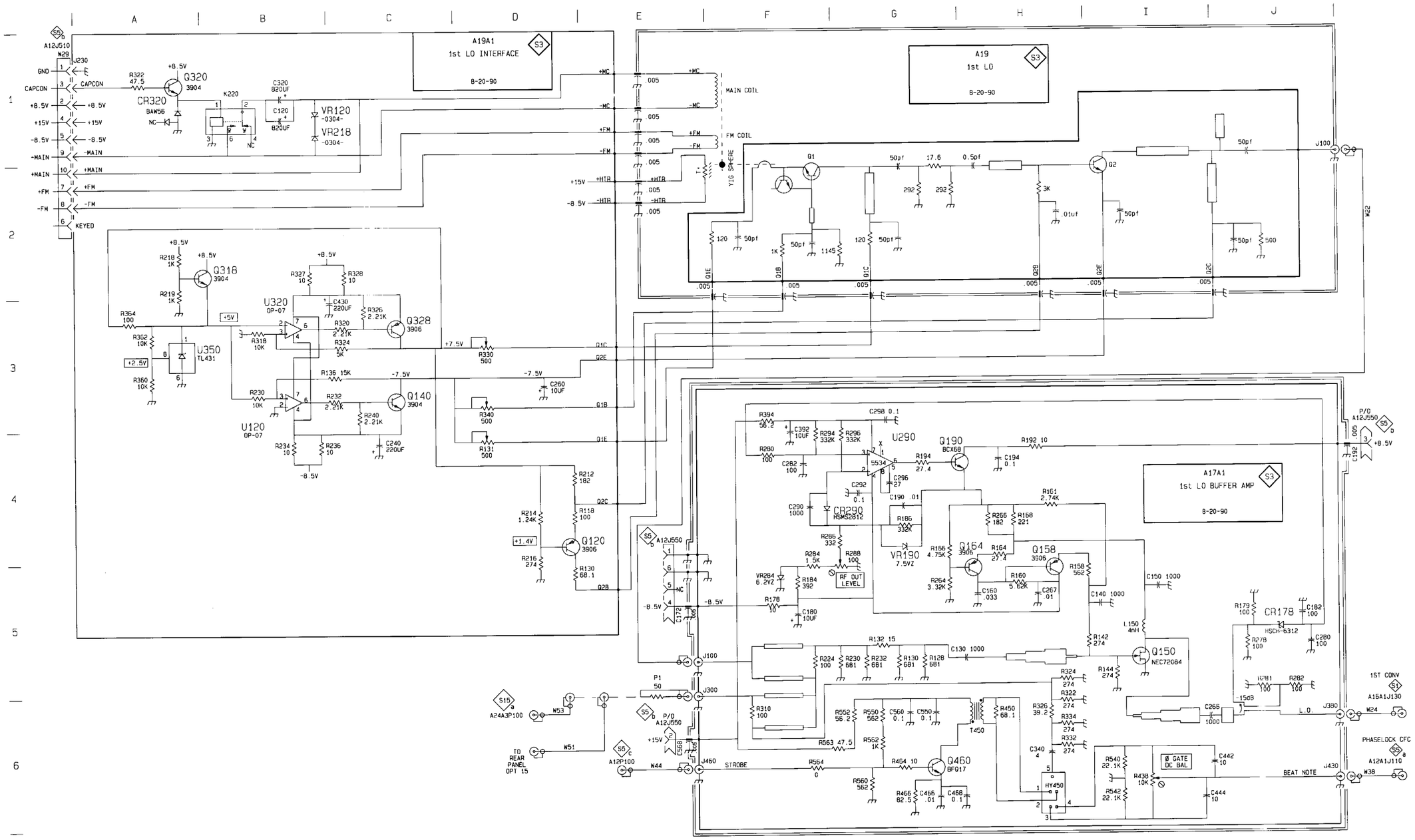

1ST LO BUFFER AMP AND 1ST LO INTERFACE S3

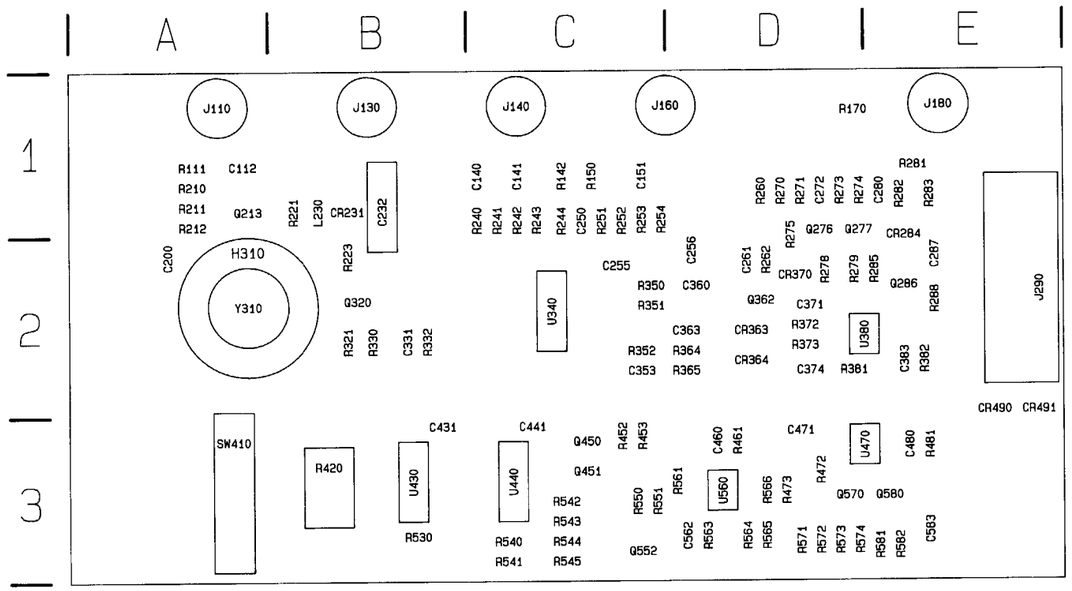

A21–Reference Oscillator Board

REFERENCE OSCILLATOR

S4

CIRCUIT NUMBER	SCHEMATIC LOCATION	BOARD LOCATION	CIRCUIT NUMBER	SCHEMATIC LOCATION	BOARD LOCATION	CIRCUIT NUMBER	SCHEMATIC LOCATION	BOARD LOCATION
C112	A-1	A-1	Q320	C-1	B-2	R365	A-2	D-2
C140	D-1	C-1	Q362	B-2	D-2	R372	A-2	D-2
C141	D-1	C-1	Q450	C-4	C-3	R373	A-2	D-2
C151	D-2	C-1	Q451	D-4	C-3	R381	A-3	D-2
C200	B-2	A-2	Q552	C-2	C-3	R382	A-2	E-2
C232	B-1	B-1	Q570	D-5	D-3	R420	B-3	B-3
C250	D-1	C-1	Q580	D-5	E-3	R452	C-3	C-3
C255	C-1	C-2	R111	A-1	A-1	R453	C-3	C-3
C256	D-2	D-2	R142	E-1	C-1	R461	D-4	D-3
C261	B-2	D-2	R150	E-2	C-1	R472	D-5	D-3
C272	E-2	D-1	R170	D-3	D-1	R473	C-5	D-3
C280	E-2	E-1	R210	A-1	A-1	R481	A-4	E-3
C287	E-3	E-2	R211	A-1	A-1	R530	C-3	B-3
C331	B-2	B-2	R212	A-1	A-1	R540	C-4	C-3
C353	A-2	C-2	R221	B-1	B-1	R541	B-4	C-3
C360	D-2	D-2	R223	B-1	B-2	R542	B-2	C-3
C363	A-2	D-2	R240	D-1	C-1	R543	B-3	C-3
C371	A-2	D-2	R241	D-1	C-1	R544	C-3	C-3
C374	A-2	D-2	R242	D-1	C-1	R545	B-2	C-3
C383	A-2	E-2	R243	D-1	C-1	R550	B-2	C-3
C431	C-3	B-3	R244	E-2	C-1	R551	B-2	C-3
C441	C-2	C-3	R251	D-1	C-1	R561	D-5	D-3
C460	D-4	D-3	R252	D-1	C-1	R563	D-5	D-3
C471	A-5	D-3	R253	D-2	C-1	R564	C-5	D-3
C480	A-5	E-3	R254	D-2	C-1	R565	C-4	D-3
C562	D-5	D-3	R260	D-3	D-1	R566	C-5	D-3
C583	B-5	E-3	R262	B-2	D-2	R571	D-5	D-3
CR231	B-1	B-1	R270	D-3	D-1	R572	D-5	D-3
CR284	E-3	E-1	R271	E-2	D-1	R573	D-5	D-3
CR363	A-3	D-2	R273	D-2	D-1	R574	E-5	D-3
CR364	A-2	D-2	R274	E-2	D-1	R581	D-5	E-3
CR370	D-2	D-2	R275	D-2	D-1	R582	E-5	E-3
CR490	A-2	E-3	R278	D-3	D-2	SW410	B-3	A-3
CR491	A-2	E-3	R279	E-3	D-2	U340	C-1	C-2
H310	D-5	A-2	R281	E-2	E-1	U340A	D-1	C-2
J110	E-1	A-1	R282	E-3	E-1	U340B	D-1	C-2
J130	E-1	B-1	R283	E-3	E-1	U340C	D-2	C-2
J140	E-1	C-1	R285	E-3	E-2	U340D	D-1	C-2
J160	E-2	D-1	R288	E-3	E-2	U380A	A-2	E-2
J180	E-2	E-1	R321	C-1	B-2	U380B	D-3	E-2
J290	A-3	E-2	R330	C-1	B-2	U430	C-3	B-3
L230	B-1	B-1	R332	B-2	B-2	U440	C-2	C-3
Q213	A-1	A-1	R350	D-2	C-2	U470	A-4	E-3
Q276	D-3	D-1	R351	D-2	C-2	U560A	D-5	D-3
Q277	E-3	D-1	R352	A-3	C-2	U560B	C-5	D-3
Q286	E-3	E-2	R364	A-2	D-2	Y310	B-1	A-2

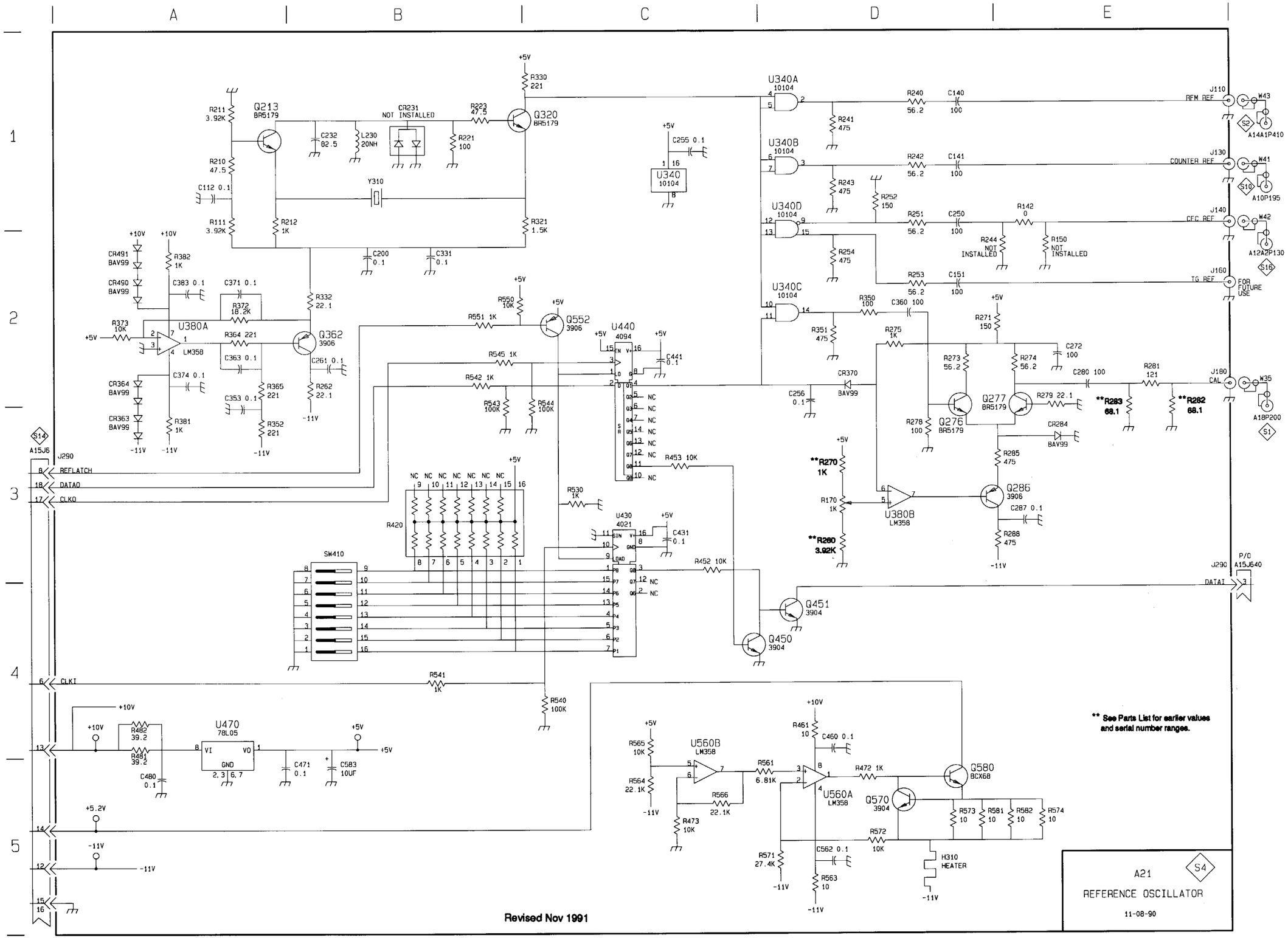
A
B
C
D
E
1
2
3
4
5
Q213
BR5179
CR231
NOT INSTALLED
R223
47.5
R330
221
Q320
BR5179
R211
3.92K
C232
82.5
L230
20NH
R221
100
R210
47.5
C112 0.1
Y310
R111
3.92K
R212
1K
R321
1.5K
C200
0.1
C331
0.1
U340A
10104
U340B
10104
U340D
10104
U340C
10104
U340
10104
C255 0.1
R240
56.2
C140
100
R241
475
R242
56.2
C141
100
R243
475
R252
150
R251
56.2
C250
100
R142
0
R244
NOT
INSTALLED
R150
NOT
INSTALLED
R254
475
R253
56.2
C151
100
R350
100
C360 100
R351
475
R275
1K
R271
150
C272
100
R273
56.2
R274
56.2
C280 100
R281
121
CR370
BAV99
C256
0.1
Q277
BR5179
R279 22.1
**R283
68.1
**R282
68.1
Q276
BR5179
CR284
BAV99
R278
100
R285
475
**R270
1K
R170
1K
U380B
LM358
Q286
3906
C287 0.1
R288
475
**R260
3.92K
-11V
J110
RFM REF
W43
S2
A14A1P410
J130
COUNTER REF
W41
S10
A10P195
J140
CEC REF
W42
A12A2P130
S16
J160
TG REF
FOR
FUTURE
USE
J180
CAL
W35
A18P200
S1
+10V
CR491
BAV99
CR490
BAV99
R382
1K
C383 0.1
C371 0.1
R372
18.2K
R373
10K
U380A
LM358
R364 221
Q362
3906
C363 0.1
C261 0.1
C374 0.1
CR364
BAV99
CR363
BAV99
R365
221
R262
22.1
C353 0.1
R381
1K
R352
221
-11V
R332
22.1
R550
10K
Q552
3906
R551 1K
U440
4094
C441
0.1
R545 1K
R542 1K
R543
100K
R544
100K
NC
R453 10K
R530
1K
U430
4021
C431
0.1
R420
SW410
R452 10K
Q451
3904
Q450
3904
S14
A15J6
J290
REFLATCH
DATAO
CLKO
CLKI
R541
1K
R540
100K
P/O
A15J640
DATAI
U470
78L05
R482
39.2
R481
39.2
C480
0.1
C471
0.1
C583
10UF
+5V
+5.2V
U560B
LM358
R565
10K
R564
22.1K
R473
10K
R566
22.1K
R561
6.81K
U560A
LM358
R461
10
C460 0.1
R472 1K
Q580
BCX68
Q570
3904
R573
10
R581
10
R582
10
R574
10
R572
10K
R571
27.4K
C562 0.1
R563
10
H310
HEATER
** See Parts List for earlier values
and serial number ranges.
A21
S4
REFERENCE OSCILLATOR
11-08-90
Revised Nov 1991

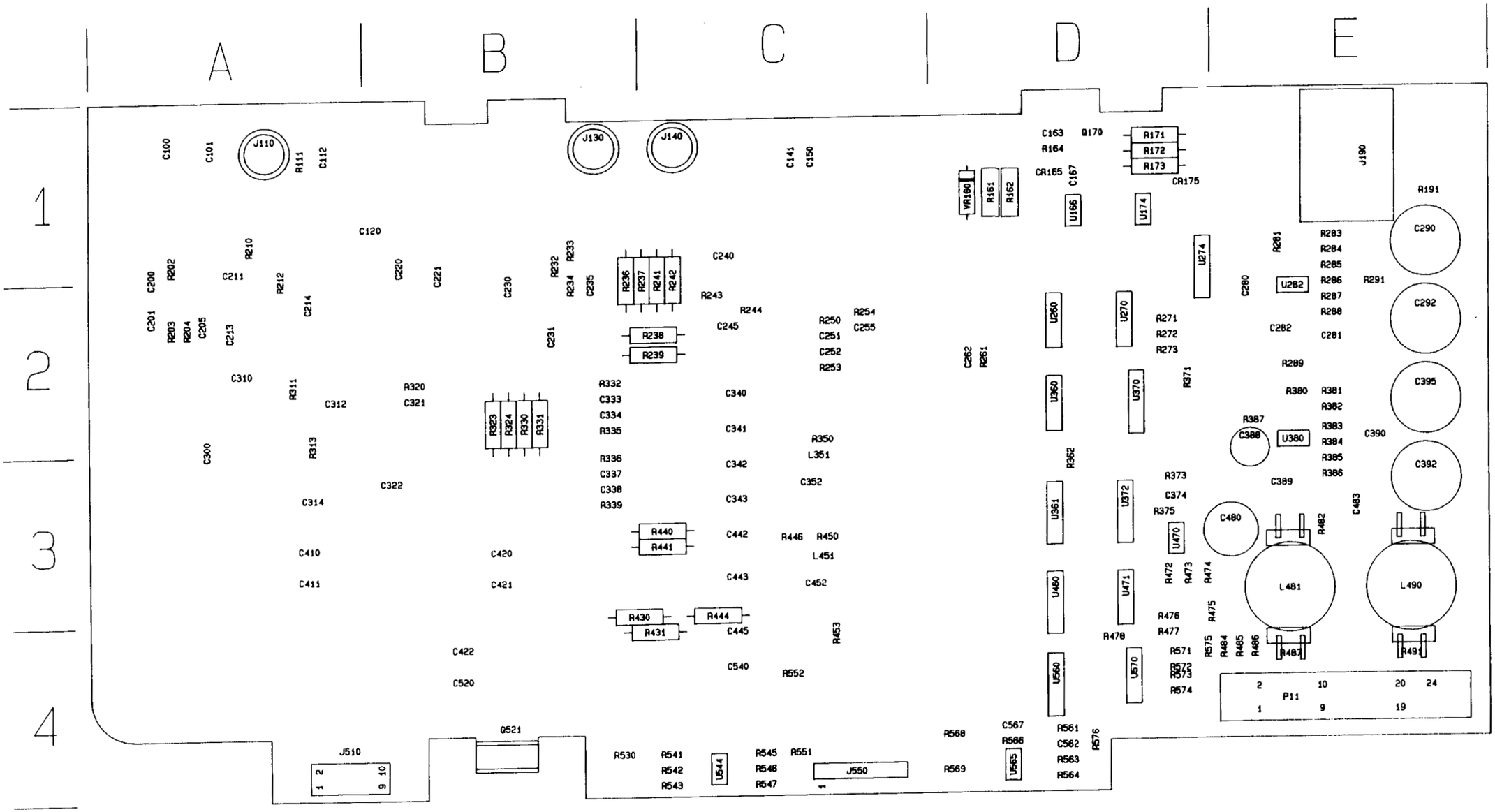

A12A1–Phaselock CFC Board (Front)

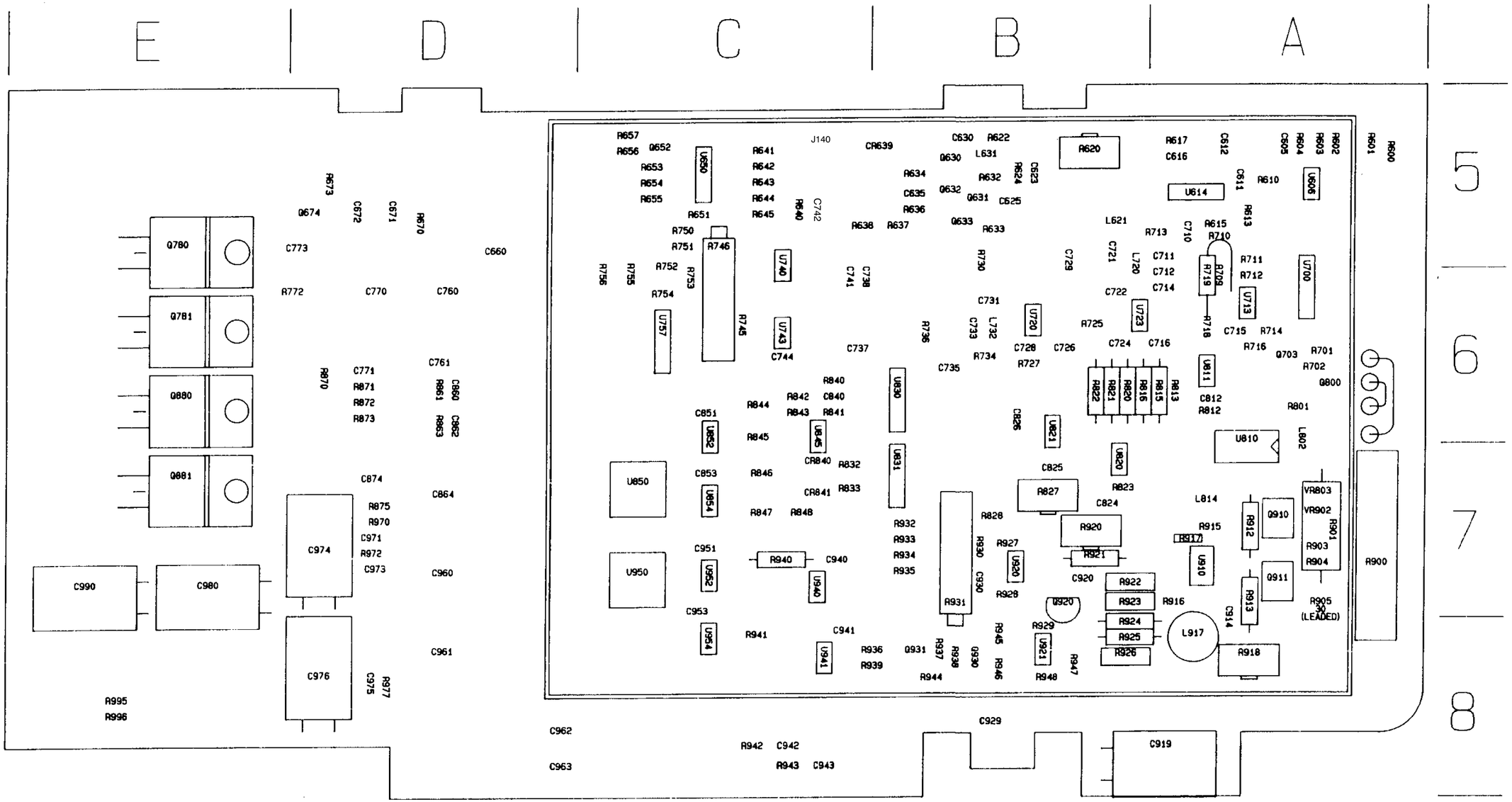

A12A1–Phaselock CFC Board (Rear)

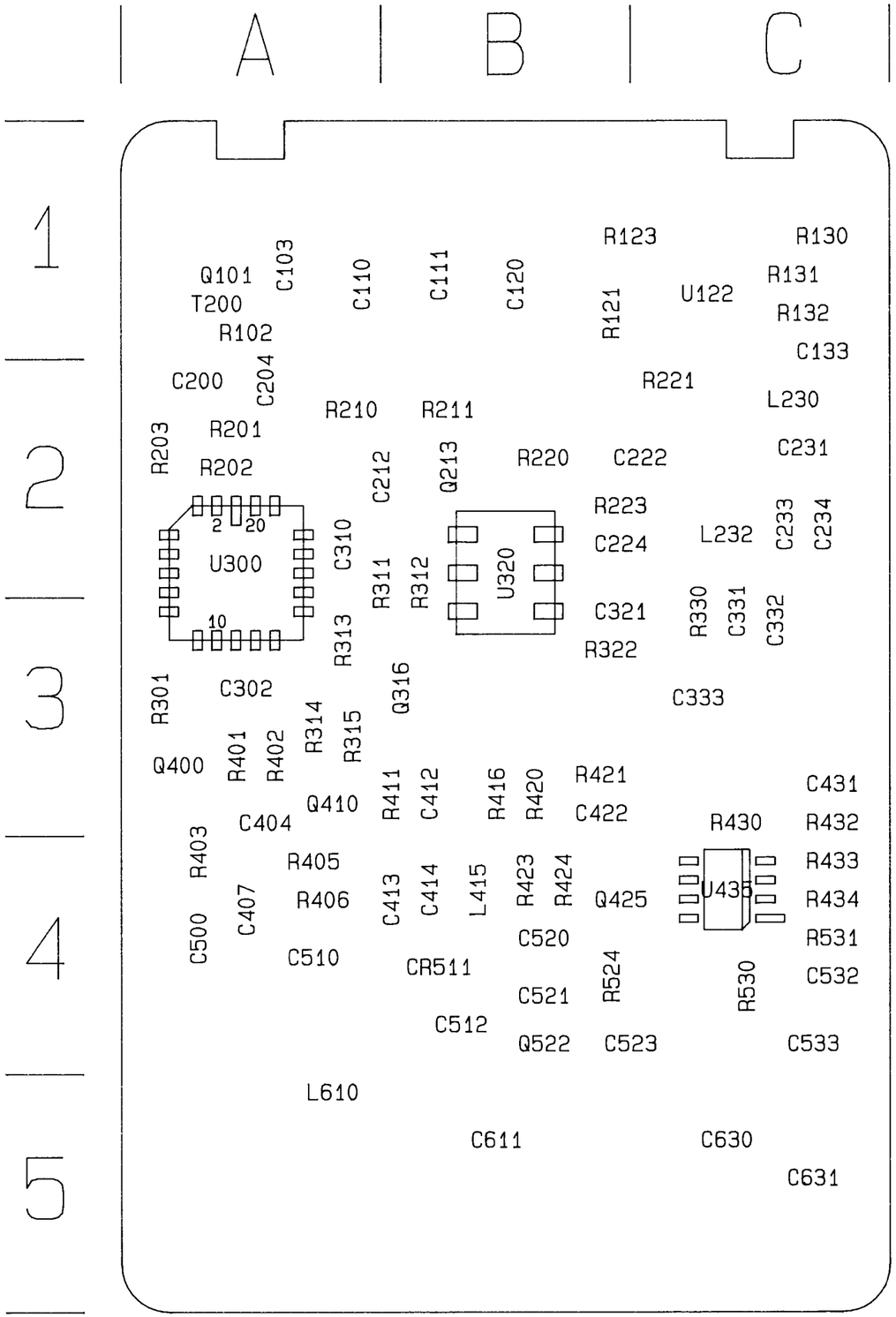

A12A2–HF VCO Board

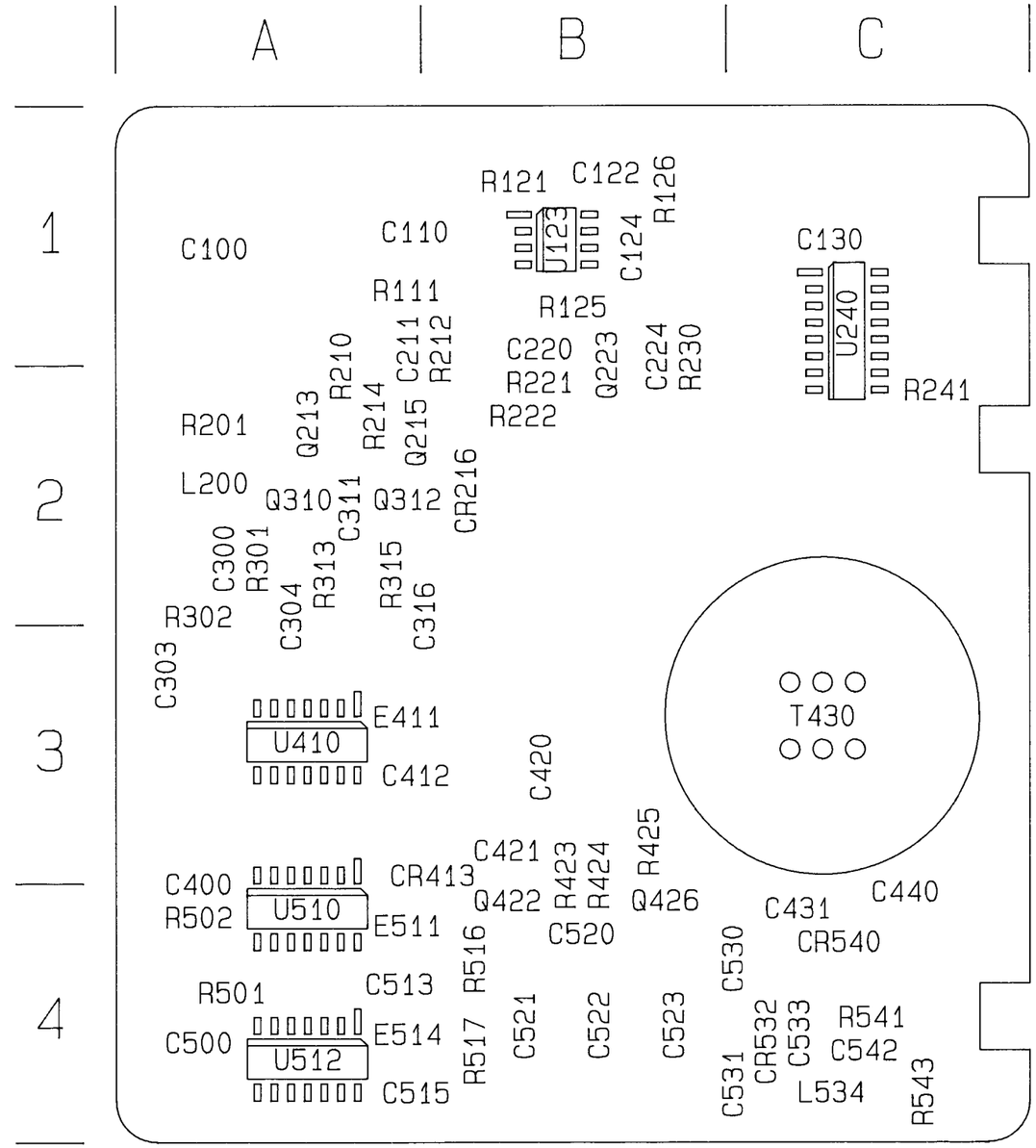

A12A3–LF VCO Board

PHASELOCK CFC

S5 a

CIRCUIT NUMBER	SCHEMATIC LOCATION	BOARD LOCATION	CIRCUIT NUMBER	SCHEMATIC LOCATION	BOARD LOCATION	CIRCUIT NUMBER	SCHEMATIC LOCATION	BOARD LOCATION
C100	H-1	A-1	Q652	J-2	C-5	R746	H-4	C-5
C101	H-1	A-1	R111	F-2	A-1	R750	I-5	C-5
C112	F-2	A-1	R202	I-3	A-1	R751	I-6	C-5
C120	G-2	B-1	R203	I-3	A-2	R752	I-6	C-6
C141	J-1	C-1	R204	I-3	A-2	R753	I-6	C-6
C150	J-1	C-1	R210	I-2	A-1	R754	H-6	C-6
C200	I-3	A-2	R212	I-3	A-2	R755	I-5	C-6
C201	I-3	A-2	R232	G-4	B-1	R756	I-5	C-6
C205	I-3	A-2	R233	G-4	B-1	R772	F-6	D-6
C211	I-2	A-1	R234	G-4	B-2	R861	D-2	D-6
C213	I-3	A-2	R236	I-5	B-2	R863	E-1	D-6
C214	F-2	A-2	R237	J-5	C-2	R870	D-2	D-6
C220	G-2	B-1	R238	I-4	C-2	R871	D-2	D-6
C221	G-3	B-1	R239	I-4	C-2	R872	C-3	D-6
C230	F-4	B-2	R241	I-5	C-2	R873	C-3	D-6
C231	G-4	B-2	R242	J-5	C-2	R875	C-4	D-7
C235	G-3	B-2	R243	J-4	C-2	R970	D-4	D-7
C240	J-4	C-1	R244	J-5	C-2	R972	D-4	D-7
C245	J-5	C-2	R250	J-3	C-2	R977	B-1	D-8
C251	J-3	C-2	R253	J-3	C-2	R995	A-5	E-8
C252	J-3	C-2	R254	J-3	C-2	R996	A-4	E-8
C255	J-3	C-2	R261	D-1	D-2	U260	D-3	D-2
C262	D-1	D-2	R271	A-3	D-2	U260A	B-2	D-2
C374	C-4	D-3	R272	A-3	D-2	U260B	H-5	D-2
C605	G-1	A-5	R273	B-3	D-2	U260C	C-1	D-2
C611	F-1	A-5	R362	B-1	D-3	U260D	B-4	D-2
C612	F-1	A-5	R371	D-2	D-2	U260E	A-3	D-2
C616	F-2	A-5	R373	C-4	D-3	U260F	B-3	D-2
C623	G-4	B-5	R375	D-4	D-3	U270	D-3	D-2
C625	F-3	B-5	R476	A-2	D-4	U270A	D-2	D-2
C630	H-3	B-5	R477	A-3	D-4	U270B	B-2	D-2
C635	F-4	A-5	R478	A-2	D-4	U270C	A-3	D-2
C710	F-2	A-5	R571	A-4	D-4	U270D	B-3	D-2
C711	G-2	A-5	R572	A-4	D-4	U274	F-5	E-1
C712	G-2	A-6	R573	A-5	D-4	U360	E-3	D-2
C714	H-2	A-6	R574	A-5	D-4	U360A	D-1	D-2
C715	I-2	A-6	R600	H-1	A-5	U360B	D-1	D-2
C716	G-3	A-6	R601	H-1	A-5	U360C	D-1	D-2
C721	G-2	B-5	R602	G-1	A-5	U360D	D-2	D-2
C722	G-2	B-6	R603	G-1	A-5	U361	C-5	D-3
C724	H-3	B-6	R604	G-1	A-5	U370	C-2	D-2
C726	F-2	B-6	R610	G-1	A-5	U372A	C-4	D-3
C728	F-2	B-6	R613	F-1	A-5	U372B	D-4	D-3
C729	G-3	B-5	R615	F-1	A-5	U460	C-5	D-3
C731	F-3	B-6	R617	F-2	A-5	U471	A-2	D-3
C733	F-3	B-6	R620	G-3	B-5	U471A	B-2	D-3
C735	F-3	B-6	R622	H-4	B-5	U471B	B-2	D-3
C737	J-5	C-6	R624	H-4	B-5	U560	D-5	D-4
C738	I-5	C-6	R632	G-3	B-5	U570	A-4	D-4
C741	I-5	C-6	R633	G-4	B-5	U570A	B-3	D-4
C742	J-5	C-6	R634	G-4	B-5	U570B	B-2	D-4
C744	I-5	C-6	R636	F-3	B-5	U570C	B-5	D-4
C747	J-5	C-6	R637	G-3	B-5	U570D	B-4	D-4
C760	D-3	D-6	R638	G-3	C-5	U606	H-1	A-5
C761	E-3	D-6	R640	J-2	C-5	U606	G-1	A-5
C770	E-3	D-6	R641	J-1	C-5	U614	F-2	A-5
C771	C-2	D-6	R642	I-2	C-5	U614	F-1	A-5
C773	F-5	D-5	R643	I-2	C-5	U650	J-1	C-5
C860	D-2	D-6	R644	I-2	C-5	U650A	I-1	C-5
C862	D-1	D-6	R645	I-2	C-5	U650B	I-2	C-5
C864	C-5	D-7	R651	I-1	C-5	U700	I-3	A-5
C874	D-4	D-7	R653	I-1	C-5	U700A	I-1	A-5
C960	D-5	D-7	R654	I-1	C-5	U700B	H-3	A-5
C961	E-5	D-8	R655	I-1	C-5	U700C	I-1	A-5
C971	D-4	D-7	R656	J-2	C-5	U700D	H-2	A-5
C973	A-2	D-7	R657	J-2	C-5	U713	I-3	A-6
C975	A-4	D-8	R709	H-2	A-6	U713	I-2	A-6
CR639	H-4	D-5	R710	F-1	A-5	U720	F-2	B-6
J110	A-1	A-1	R711	H-2	A-5	U720	F-3	B-6
J130	J-4	B-1	R712	H-1	A-6	U723	G-3	B-6
J140	J-6	C-1	R713	G-2	A-5	U723	G-3	B-6
J190	A-6	E-1	R714	I-2	A-6	U740	J-6	C-5
L621	G-2	B-5	R718	I-2	A-6	U740	J-5	C-5
L631	H-3	B-5	R719	F-2	A-6	U743	J-5	C-5
L720	G-2	B-5	R725	G-3	B-6	U743	I-4	C-5
L732	F-3	B-6	R727	F-2	B-6	U757	J-3	C-6
P11	A-2	E-4	R730	F-4	B-5	U757A	I-5	C-6
Q630	G-3	B-5	R734	F-3	B-6	U757B	I-6	C-6
Q631	G-4	B-5	R736	G-4	B-6	U757C	H-6	C-6
Q632	F-3	B-5	R745	I-4	C-6	U757D	I-5	C-6
Q633	F-4	B-5						

S5 b (on reverse side of this page)

PHASELOCK CFC

S5 b

CIRCUIT NUMBERS	SCHEMATIC LOCATION	BOARD LOCATION	CIRCUIT NUMBERS	SCHEMATIC LOCATION	BOARD LOCATION	CIRCUIT NUMBERS	SCHEMATIC LOCATION	BOARD LOCATION
C163	F-6	D-1	L351	B-1	C-3	R487	A-4	E-4
C167	F-6	D-1	L451	B-1	C-3	R491	A-4	E-4
C280	C-6	E-2	L481	A-4	E-3	R530	J-4	B-4
C281	B-6	E-2	L490	A-4	E-3	R541	I-6	C-1
C282	C-6	E-2	L802	I-1	A-6	R542	I-5	C-1
C290	D-6	E-1	L814	I-2	A-7	R543	J-6	C-1
C292	B-6	E-2	L917	J-4	A-8	R545	J-6	C-1
C300	I-2	A-2	P11	A-2	E-4	R546	I-6	C-1
C310	I-1	A-2	P11	J-5	E-4	R547	I-6	C-1
C312	I-2	A-2	Q170	F-6	D-1	R551	J-6	C-1
C314	I-2	A-3	Q521	I-4	B-4	R552	E-4	C-4
C321	F-1	B-3	Q674	E-5	D-5	R561	A-2	D-4
C322	F-1	B-3	Q703	J-2	A-6	R563	A-2	D-4
C333	F-1	B-2	Q780	D-6	E-5	R564	A-2	D-4
C334	E-1	B-2	Q781	B-6	E-6	R566	A-2	D-4
C337	E-1	B-3	Q800	J-1	A-6	R566	A-2	D-4
C338	D-1	B-3	Q880	B-5	A-6	R568	A-1	D-4
C340	C-1	C-2	Q881	D-5	E-7	R569	A-2	D-4
C341	C-1	C-2	Q910	J-2	A-7	R575	A-5	E-4
C342	D-2	C-3	Q911	J-2	A-7	R576	A-2	D-4
C343	D-2	C-3	Q920	H-4	B-7	R670	G-6	D-5
C352	B-1	C-3	Q930	H-5	B-8	R673	G-6	D-5
C388	C-5	E-2	Q931	G-5	B-8	R701	J-1	A-6
C389	C-5	E-3	R161	E-6	D-1	R702	J-1	A-6
C390	B-5	E-2	R162	E-6	D-1	R716	J-1	A-6
C392	D-5	E-3	R164	F-6	D-1	R801	J-1	A-6
C395	B-6	E-2	R171	E-6	D-1	R812	I-2	A-6
C410	H-3	A-3	R172	F-5	D-1	R813	I-3	A-6
C411	H-3	A-3	R173	E-5	D-1	R815	I-3	A-6
C420	F-4	B-3	R191	D-6	E-1	R816	G-2	B-6
C421	F-4	B-3	R281	C-6	E-1	R820	H-2	B-6
C422	H-4	B-4	R283	D-6	E-1	R821	G-2	B-6
C442	B-2	C-3	R284	C-5	E-1	R822	G-2	B-6
C443	B-3	C-3	R285	C-6	E-1	R823	G-1	B-7
C445	E-4	C-4	R286	B-6	E-2	R827	H-1	B-7
C452	B-1	C-3	R287	A-6	E-2	R828	J-4	B-7
C480	B-4	E-3	R288	A-6	E-2	R832	D-4	C-7
C483	D-5	E-3	R289	C-6	E-2	R833	D-4	C-7
C520	H-4	B-4	R291	B-6	E-2	R840	C-1	C-6
C540	E-4	C-4	R311	I-1	A-2	R841	D-1	C-6
C562	A-2	D-4	R313	I-2	A-2	R842	C-1	C-6
C567	A-2	D-4	R320	G-1	B-2	R843	C-1	C-6
C660	E-6	D-5	R323	H-2	B-2	R844	C-1	C-6
C671	G-6	D-5	R324	H-1	B-2	R845	C-1	C-6
C672	G-6	D-5	R330	G-1	B-2	R846	D-2	C-7
C812	I-2	A-6	R331	G-1	B-2	R847	D-3	C-7
C824	G-2	B-7	R332	F-1	B-2	R848	D-2	C-7
C825	H-1	B-7	R335	E-1	B-2	R900	I-5	A-8
C826	H-2	B-6	R336	E-1	B-3	R901	J-2	A-8
C840	D-1	C-6	R339	D-1	B-3	R903	J-2	A-8
C851	C-1	C-6	R350	B-1	C-2	R904	J-2	A-8
C853	C-2	C-7	R380	B-5	E-2	R905	I-3	A-8
C914	G-3	A-8	R381	B-5	E-2	R912	G-3	A-7
C919	J-4	A-8	R382	A-5	E-2	R913	G-3	A-7
C920	G-4	B-7	R383	A-5	E-2	R915	H-2	A-7
C929	I-4	B-8	R384	D-5	E-3	R916	H-3	A-7
C930	G-5	B-7	R385	C-5	E-3	R917	F-3	A-7
C940	D-3	C-7	R386	C-5	E-3	R918	G-3	A-7
C941	D-4	C-8	R387	C-5	E-2	R920	G-2	B-7
C942	I-6	C-8	R430	C-4	C-3	R921	G-4	B-7
C943	I-6	C-8	R431	D-3	C-4	R922	G-5	B-7
C951	C-3	C-7	R440	C-3	C-3	R923	G-4	B-7
C953	C-4	C-7	R441	D-3	C-3	R924	G-4	A-8
C962	A-1	D-8	R444	C-4	C-3	R925	G-3	A-8
C963	A-1	D-8	R446	B-2	C-3	R926	I-5	A-8
C974	A-4	D-7	R450	B-1	C-3	R927	F-4	B-7
C976	A-5	D-8	R453	B-3	C-4	R928	F-4	B-7
C980	A-4	E-7	R472	B-4	D-3	R929	H-5	B-8
C990	A-4	E-7	R473	B-4	D-3	R930	G-5	B-7
CR165	F-6	D-1	R474	A-4	D-3	R931	F-5	B-7
CR175	E-5	D-1	R475	A-4	E-4	R932	D-2	B-7
CR840	D-4	C-7	R482	C-5	E-3	R933	D-2	B-7
CR841	D-4	C-7	R484	A-5	E-4	R934	D-2	B-7
J510	J-3	A-4	R485	A-5	E-4	R935	D-2	B-7
J550	C-6	C-4	R486	A-5	E-4	R936	G-5	B-8

PHASELOCK CFC

(Continued)

S5 b

CIRCUIT NUMBERS	SCHEMATIC LOCATION	BOARD LOCATION	CIRCUIT NUMBERS	SCHEMATIC LOCATION	BOARD LOCATION	CIRCUIT NUMBERS	SCHEMATIC LOCATION	BOARD LOCATION
R937	G-5	B-8	U470	B-4	D-3	U852	C-1	C-6
R938	G-6	B-8	U544	H-6	C-4	U854	D-2	C-7
R939	G-5	B-8	U544A	I-6	C-4	U854	C-2	C-7
R940	C-3	C-7	U544B	J-6	C-4	U910	G-3	A-7
R941	E-4	C-8	U565	A-2	D-4	U910	H-3	A-7
R942	H-5	C-8	U565	A-1	D-4	U920	F-4	B-7
R943	H-6	C-8	U810	I-2	A-7	U920	G-5	B-7
R944	H-5	B-8	U810	I-2	A-7	U921	H-4	B-8
R945	H-5	B-8	U811	I-2	A-6	U940	D-3	C-7
R946	H-4	B-8	U811	I-2	A-6	U940	B-3	C-7
R947	I-4	B-8	U820	F-1	B-7	U941	E-4	C-8
R948	H-4	B-8	U820	G-2	B-7	U941	D-4	C-8
U166	G-6	D-1	U821	G-1	B-6	U950	B-1	C-7
U166	F-6	D-1	U821	H-2	B-6	U950	B-3	C-7
U174	F-5	D-1	U830A	F-2	B-6	U952	C-3	C-7
U174	G-6	D-1	U830B	F-1	B-6	U952	B-3	C-7
U282	C-6	E-2	U831	E-1	B-7	U954	C-4	C-8
U282A	A-6	E-2	U845	C-1	C-6	U954	E-4	C-8
U282B	C-6	E-2	U845	D-1	C-6	VR160	E-6	D-1
U380	C-5	E-3	U850	B-1	C-7	VR803	J-2	A-7
U380A	C-5	E-3	U850	B-1	C-7	VR902	J-2	A-7
U380B	A-5	E-3	U852	C-1	C-6			

S5 c (on next page)

PHASELOCK CFC

S5
C

HFVCO

CIRCUIT NUMBER	SCHEMATIC LOCATION	BOARD LOCATION	CIRCUIT NUMBER	SCHEMATIC LOCATION	BOARD LOCATION	CIRCUIT NUMBER	SCHEMATIC LOCATION	BOARD LOCATION
C1	A-6	CHASSIS	C532	D-4	C-4	R3	E-5	CHASSIS
C103	E-5	A-1	C533	D-5	C-4	R301	E-3	A-3
C11	D-6	CHASSIS	C611	C-5	B-5	R311	D-1	B-2
C110	B-3	A-1	C630	D-4	C-5	R312	D-1	B-2
C111	A-4	B-1	C631	E-5	C-5	R313	D-2	A-3
C120	A-4	B-1	CR511	C-4	B-4	R314	C-3	A-3
C133	B-1	C-1	J100	E-6	CHASSIS	R315	C-2	A-3
C2	B-6	CHASSIS	J130	A-1	CHASSIS	R322	C-1	B-3
C200	E-2	A-2	L230	B-1	C-2	R330	D-2	C-3
C204	E-3	A-2	L232	E-2	C-2	R401	D-3	A-3
C212	B-2	B-2	L415	C-4	B-4	R402	C-3	A-3
C222	B-1	B-2	L610	C-3	A-5	R403	D-3	A-4
C224	C-1	B-2	Q101	E-5	A-1	R405	C-3	A-4
C231	B-1	C-2	Q213	C-1	B-2	R406	B-3	A-4
C233	E-2	C-2	Q316	C-2	B-3	R411	C-3	B-3
C234	E-2	C-2	Q400	D-3	A-3	R416	C-4	B-3
C3	B-6	CHASSIS	Q410	C-3	A-3	R420	D-4	B-3
C302	B-2	A-3	Q425	B-5	B-4	R421	B-5	B-3
C310	D-2	A-2	Q522	C-5	B-4	R423	C-5	B-4
C321	C-1	B-3	R1	E-4	CHASSIS	R424	B-5	B-4
C331	D-2	C-3	R102	E-5	A-1	R430	D-4	C-3
C332	D-2	C-3	R121	A-4	B-1	R432	D-5	C-3
C333	D-4	C-3	R123	A-4	B-1	R433	D-4	C-4
C404	C-3	A-3	R130	A-1	C-1	R434	D-4	C-4
C407	C-3	A-4	R131	A-1	C-1	R524	C-5	B-4
C412	C-4	B-3	R132	A-1	C-1	R530	D-4	C-4
C413	B-3	B-4	R2	E-4	CHASSIS	R531	D-4	C-4
C414	C-4	B-4	R201	D-3	A-2	R630	D-5	CHASSIS
C422	B-5	B-3	R202	E-3	A-2	T200	E-3	A-1
C431	D-5	C-3	R203	D-2	A-2	U122	A-3	C-1
C500	C-3	A-4	R210	C-2	A-2	U300	D-2	A-2
C510	B-3	A-4	R211	C-2	B-2	U300A	D-2	A-2
C512	C-4	B-4	R220	B-1	B-2	U300B	D-3	A-2
C520	C-5	B-4	R221	B-3	C-2	U320	C-1	B-2
C521	C-5	B-4	R223	C-1	B-2	U435	D-4	C-4
C523	C-5	B-4						

LFVCO

CIRCUIT NUMBER	SCHEMATIC LOCATION	BOARD LOCATION	CIRCUIT NUMBER	SCHEMATIC LOCATION	BOARD LOCATION	CIRCUIT NUMBER	SCHEMATIC LOCATION	BOARD LOCATION
C10	H-6	CHASSIS	C6	G-6	CHASSIS	R222	H-3	B-2
C100	H-6	A-1	C7	G-6	CHASSIS	R230	H-4	B-1
C110	H-4	A-1	C8	H-6	CHASSIS	R241	J-5	C-2
C122	G-4	B-1	C9	H-6	CHASSIS	R301	F-2	A-2
C124	I-4	B-1	CR216	G-1	B-2	R302	F-2	A-2
C130	I-5	C-1	CR413	J-3	A-3	R313	G-2	A-2
C211	G-1	A-1	CR532	G-3	C-4	R315	G-2	A-2
C220	H-4	B-1	CR540	G-3	C-4	R423	I-3	B-4
C224	H-4	B-1	E411	H-1	A-3	R424	H-3	B-4
C300	F-2	A-2	J140	H-6	CHASSIS	R425	H-3	B-3
C303	F-5	A-3	J240	J-6	CHASSIS	R501	F-4	A-4
C304	G-2	A-2	J540	F-6	CHASSIS	R502	F-4	A-4
C311	G-2	A-2	E511	I-1	A-4	R516	I-3	B-4
C316	G-2	A-3	E514	H-1	A-4	R517	I-3	B-4
C4	F-6	CHASSIS	L200	F-2	A-2	R541	F-3	C-4
C400	F-4	A-3	L534	G-3	C-4	R543	H-3	C-4
C412	H-1	A-3	Q213	G-1	A-2	T430	H-3	C-3
C420	I-4	B-3	Q215	G-1	A-2	U123	G-4	B-1
C421	I-4	B-3	Q223	H-4	B-2	U123	H-4	B-1
C431	I-3	C-4	Q310	F-2	A-2	U240	I-5	C-1
C5	G-5	CHASSIS	Q312	G-2	A-2	U410	H-1	A-3
C500	F-4	A-4	Q422	I-3	B-4	U410A	G-2	A-3
C513	I-1	A-4	Q426	H-3	B-4	U410B	H-2	A-3
C515	H-1	A-4	R111	G-3	A-1	U510	I-1	A-4
C520	I-3	B-4	R121	H-4	B-1	U510A	I-2	A-4
C521	H-3	B-4	R125	G-3	B-1	U510B	I-1	A-4
C522	H-3	B-4	R126	G-4	B-1	U510C	I-1	A-4
C523	H-3	B-4	R201	G-2	A-2	U510D	J-3	A-4
C530	I-3	C-4	R210	G-1	A-2	U512	H-1	A-4
C531	G-3	C-4	R212	G-1	B-1	U512A	H-2	A-4
C533	G-3	C-4	R214	G-1	B-2	U512B	H-1	A-4
C542	G-3	C-4	R221	H-4	B-2			

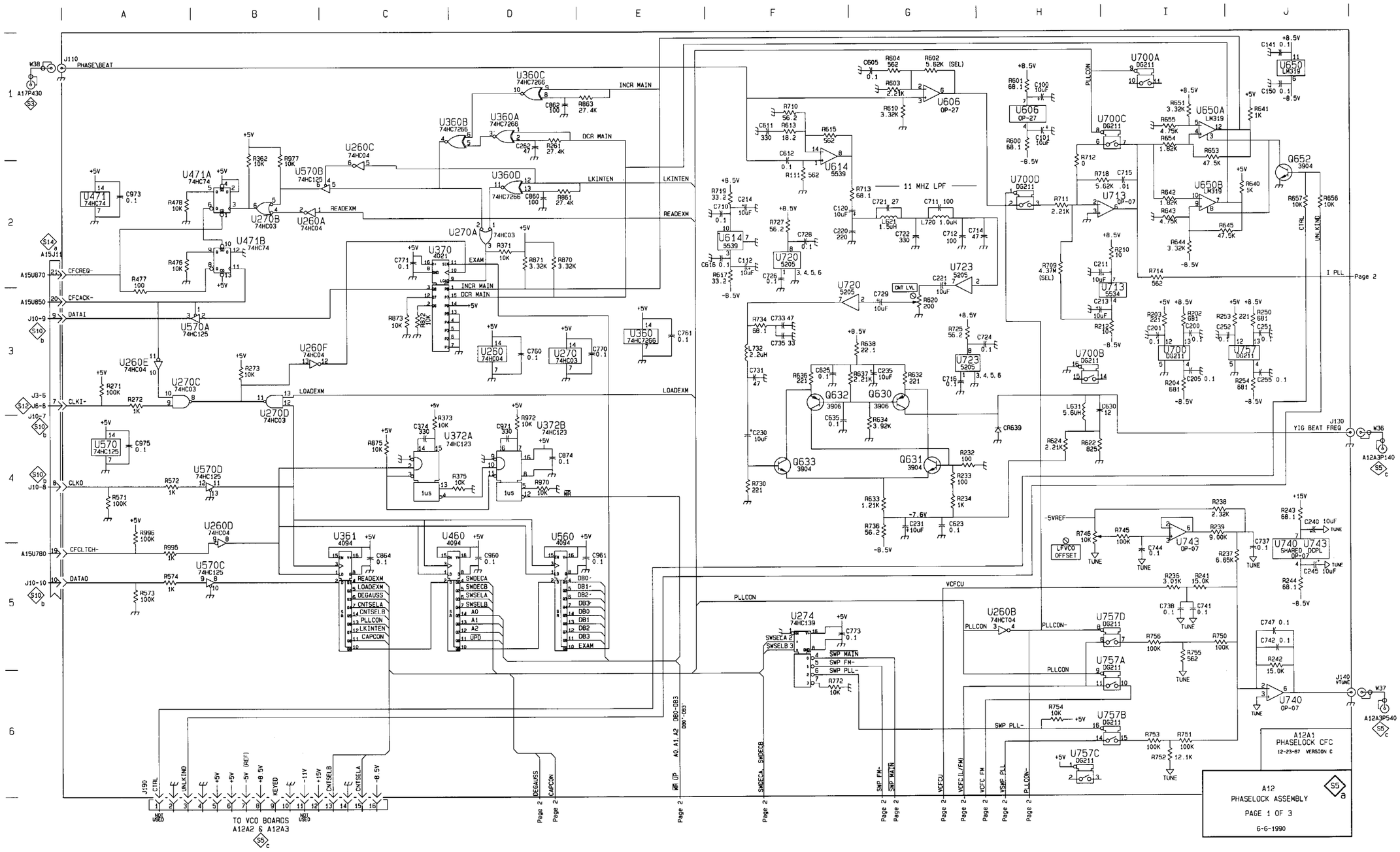
A12
PHASELOCK ASSEMBLY
PAGE 1 OF 3
6-6-1990
A12A1
PHASELOCK CFC
12-23-87 VERSION C
TO VCO BOARDS
A12A2 & A12A3
11 MHZ LPF
PHASE\BEAT
INCR MAIN
DCR MAIN
LKINTEN
READEXM
LOADEXM
CFCREQ-
CFCACK-
DATAI
CLKI-
CLKO
CFCLTCH-
DATAO
PLLCON
VCFCU
YIG BEAT FREQ
I PLL
LFVCO OFFSET
SWP MAIN
SWP FM-
SWP PLL-
SWP PLL-
SWDECA
SWDECB
CAPCON
DEGAUSS
CNTSELA
CNTSELB
PLLCON
LKINTEN
CTRL
UNLKIND
KEYED
Page 2

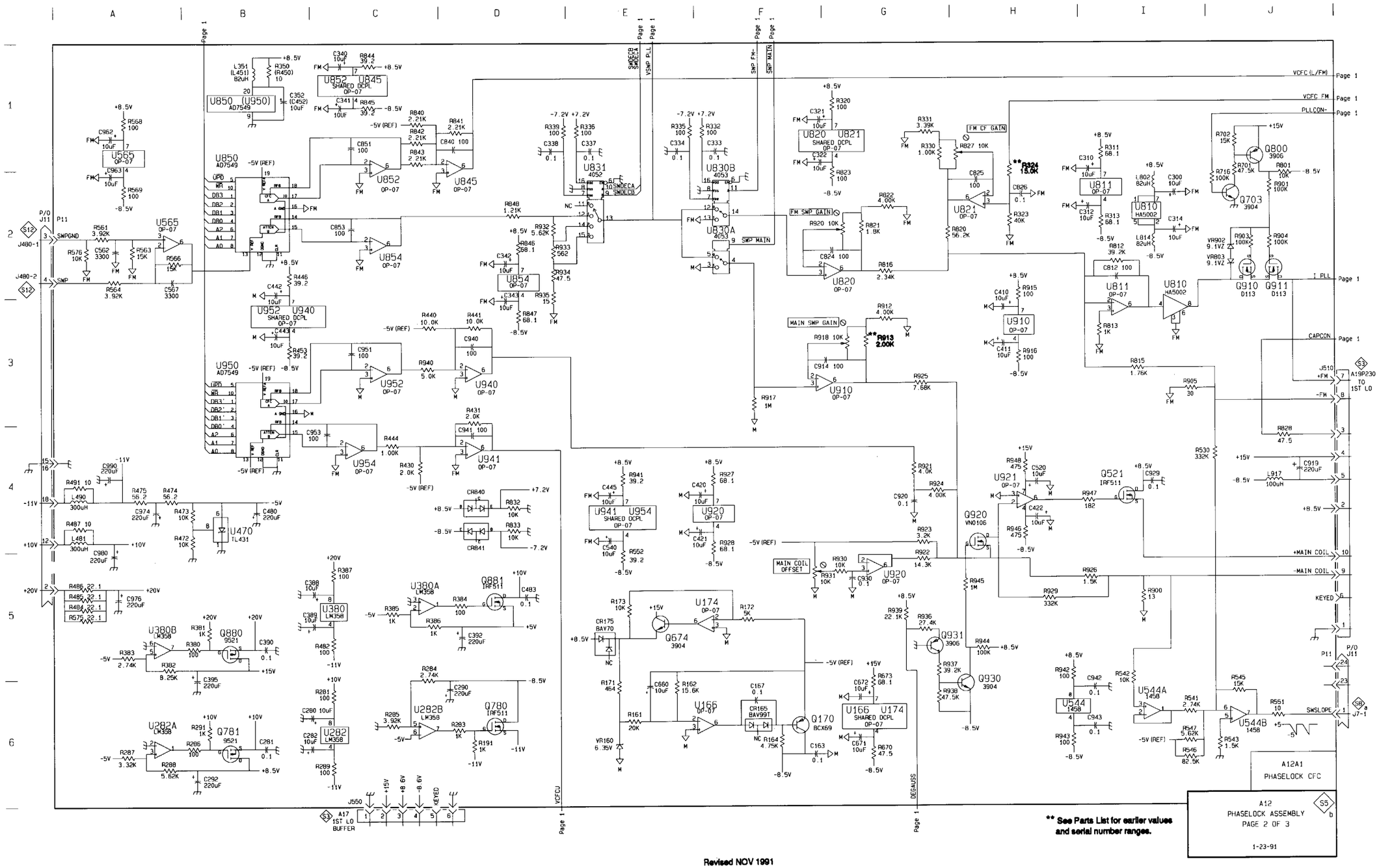

Revised NOV 1991

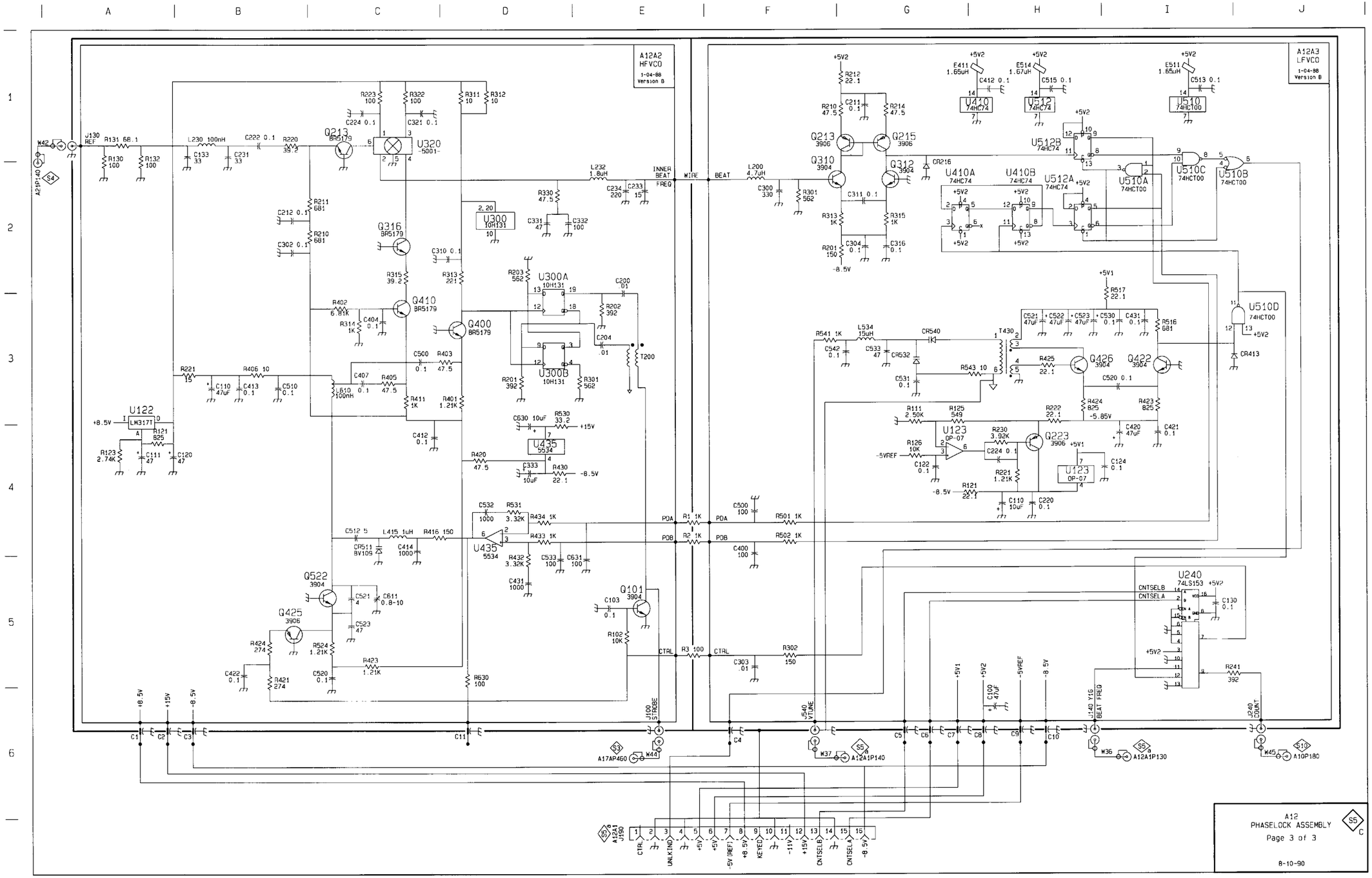
A12A2
HFVCO
1-04-88
Version B
A12A3
LFVCO
1-04-88
Version B
INNER BEAT FREQ
WIRE
BEAT
PDA
PDB
CTRL
CNTSELB
CNTSELA
A12
PHASELOCK ASSEMBLY
Page 3 of 3
8-10-90

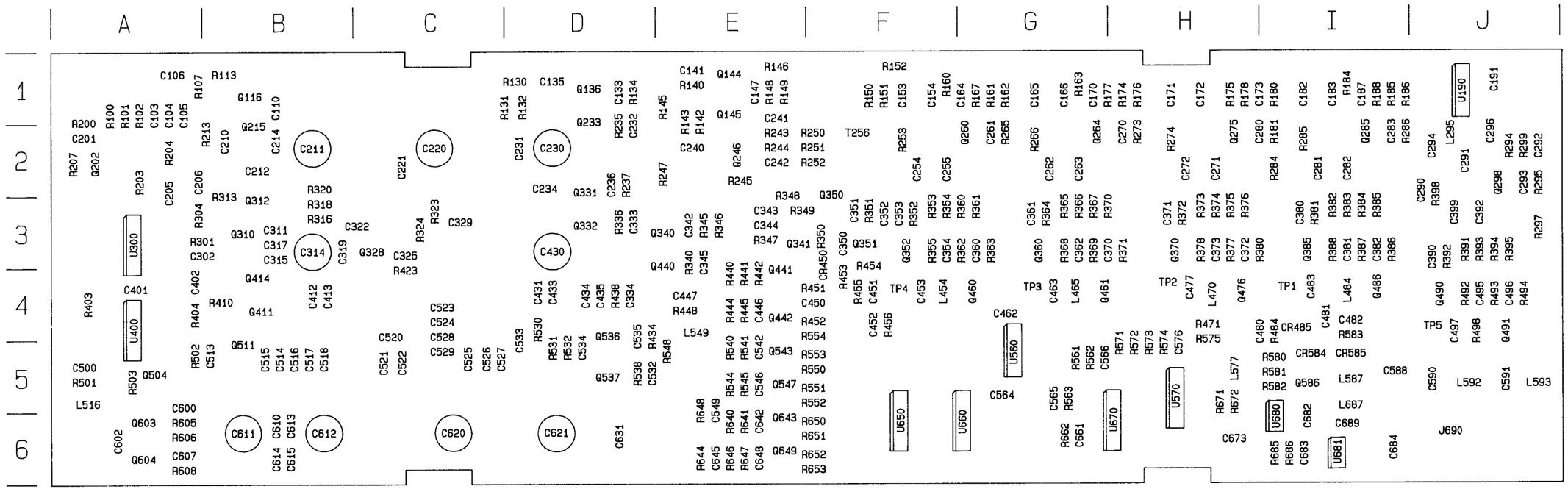

A13A1–VR Board (Front)

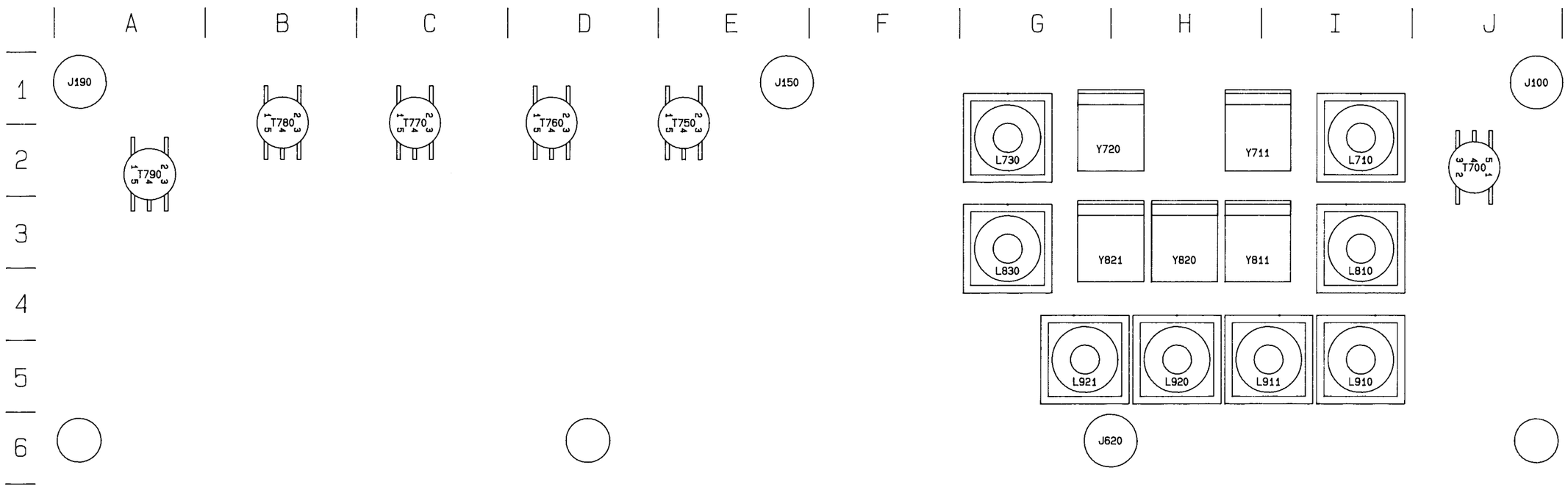

A13A1–VR Board (Rear)

S6 a

VARIABLE RESOLUTION

CIRCUIT NUMBER	SCHEMATIC LOCATION	BOARD LOCATION	CIRCUIT NUMBER	SCHEMATIC LOCATION	BOARD LOCATION	CIRCUIT NUMBER	SCHEMATIC LOCATION	BOARD LOCATION
C103	J-4	A-1	C446	F-5	E-4	Q385	A-2	I-3
C104	J-3	A-1	C450	G-5	F-4	Q441	F-4	E-3
C105	J-3	A-1	C451	H-5	F-4	Q442	E-5	E-4
C153	I-1	F-1	C452	H-4	F-4	Q460	J-1	G-4
C154	H-1	F-1	C453	J-2	F-4	Q461	H-1	G-4
C164	I-2	G-1	C463	H-2	G-4	Q476	E-1	H-4
C165	F-1	G-1	C477	E-2	H-4	Q486	C-2	I-4
C166	F-1	G-1	C480	F-3	H-4	Q490	A-4	J-4
C170	G-2	G-1	C481	E-3	I-4	Q491	C-3	J-4
C171	D-1	H-1	C482	F-3	I-4	Q543	E-5	E-5
C172	D-1	H-1	C483	C-2	I-4	Q547	E-5	E-5
C173	D-2	H-1	C495	B-4	J-4	Q586	D-3	I-5
C182	B-1	I-1	C496	C-3	J-4	Q643	E-4	E-6
C183	A-1	I-1	C497	C-4	J-4	Q649	E-4	E-6
C187	B-2	I-1	C542	F-5	E-4	R100	J-4	A-1
C201	J-4	A-2	C546	F-5	E-5	R101	J-4	A-1
C205	I-4	A-2	C549	E-4	E-5	R102	J-4	A-1
C241	G-3	E-1	C564	D-5	G-5	R150	H-3	F-1
C242	G-3	E-2	C565	C-5	G-5	R151	H-3	F-1
C254	I-1	F-2	C566	C-5	G-5	R152	H-3	F-1
C255	I-1	F-2	C576	B-5	H-4	R160	H-2	F-1
C261	I-2	G-2	C642	F-4	E-6	R161	I-1	G-1
C262	F-1	G-2	C645	F-4	E-6	R162	I-1	G-1
C263	F-1	G-2	C648	F-4	E-6	R163	F-2	G-1
C270	G-2	H-2	C661	C-5	G-6	R167	I-1	G-1
C271	D-1	H-2	C689	D-4	I-6	R174	G-1	H-1
C272	D-1	H-2	CR450	G-5	F-3	R175	D-2	H-1
C280	E-2	H-2	CR485	E-3	I-4	R176	G-1	H-1
C281	B-1	I-2	CR584	C-3	I-5	R177	G-1	G-1
C282	B-1	I-2	CR585	F-3	I-5	R178	D-1	H-1
C283	C-2	I-2	J100	J-4	J-7	R180	D-1	I-1
C290	A-2	J-2	J190	A-3	A-7	R181	E-1	I-1
C291	A-3	J-2	J690	A-4	J-6	R184	A-2	I-1
C292	B-3	J-2	L295	A-3	J-1	R185	B-2	I-1
C293	B-3	J-2	L380	B-1	I-3	R186	B-2	I-1
C294	J-2	A-3	L454	J-2	F-4	R188	B-2	I-1
C296	J-2	A-3	L465	H-2	G-4	R200	J-4	A-1
C343	G-4	E-3	L470	E-2	H-4	R203	J-4	A-2
C344	G-4	E-3	L484	C-2	I-4	R204	J-3	A-2
C350	G-5	F-3	L498	C-4	J-4	R207	J-4	A-2
C351	G-5	F-3	L577	E-3	H-5	R243	G-3	E-2
C352	J-2	F-3	L587	E-3	I-5	R244	G-3	E-2
C353	H-2	F-3	L687	E-3	I-5	R245	G-3	E-2
C354	I-2	F-3	Q202	J-4	A-2	R250	F-3	F-2
C360	J-1	G-3	Q246	G-3	E-2	R251	G-3	F-2
C361	F-2	G-3	Q260	I-1	G-2	R252	G-3	F-2
C362	F-2	G-3	Q264	F-1	G-2	R253	I-1	F-2
C370	G-1	G-3	Q275	D-1	H-1	R265	J-1	G-2
C371	C-2	H-3	Q285	B-2	I-1	R266	F-1	G-2
C372	E-1	H-3	Q298	B-3	J-2	R273	G-1	H-2
C373	D-2	H-3	Q341	G-4	E-3	R274	D-1	H-2
C380	A-2	I-3	Q350	G-4	F-2	R284	E-1	I-2
C381	B-2	I-3	Q351	G-5	F-3	R285	B-1	I-2
C382	C-1	I-3	Q352	H-2	F-3	R286	C-2	I-2
C390	A-3	J-3	Q360	F-2	G-3	R294	A-3	J-2
C392	B-3	J-3	Q370	C-2	H-3	R295	B-3	J-2
C399	B-3	J-3						

S6 a continued

VARIABLE RESOLUTION

(Continued)

S6 a

CIRCUIT NUMBER	SCHEMATIC LOCATION	BOARD LOCATION	CIRCUIT NUMBER	SCHEMATIC LOCATION	BOARD LOCATION	CIRCUIT NUMBER	SCHEMATIC LOCATION	BOARD LOCATION
R297	C-3	J-3	R394	B-3	J-3	R644	F-4	E-6
R299	B-3	J-2	R395	C-3	J-3	R646	F-4	E-6
R347	F-4	E-3	R398	A-3	J-2	R647	F-4	E-6
R348	G-4	E-2	R440	H-5	E-4	R648	E-4	E-6
R349	G-4	E-3	R441	F-5	E-4	R650	E-4	F-6
R350	G-4	F-3	R442	F-5	E-4	R651	E-4	F-6
R351	G-5	F-3	R444	F-5	E-4	R652	E-4	F-6
R352	H-1	F-3	R445	F-5	E-4	R653	E-4	F-6
R353	I-1	F-3	R451	G-5	F-4	R662	C-5	G-6
R354	I-2	F-3	R452	E-5	F-4	R671	D-3	H-5
R355	I-2	F-3	R453	G-5	F-4	R672	D-3	H-5
R360	I-1	G-3	R454	G-5	F-3	R685	D-3	I-6
R361	J-1	G-3	R455	G-5	F-4	R686	D-4	I-6
R362	I-2	G-3	R456	H-4	F-4	T256	G-3	F-2
R363	J-1	G-3	R471	A-5	H-4	T700	J-4	J-8
R364	F-1	G-3	R484	F-3	I-4	T750	H-1	E-7
R365	G-1	G-3	R492	A-4	J-4	T760	F-1	D-7
R366	G-1	G-3	R493	B-4	J-4	T770	D-1	C-7
R367	G-1	G-3	R494	C-3	J-4	T780	A-1	B-7
R368	F-2	G-3	R540	F-5	E-5	T790	A-3	A-8
R369	F-2	G-3	R541	F-5	E-5	TP1	C-2	I-4
R370	G-1	G-3	R544	F-5	E-5	TP2	E-2	H-4
R371	H-1	H-3	R545	F-5	E-5	TP3	H-2	G-4
R372	C-1	H-3	R550	E-5	F-5	TP4	J-2	F-4
R373	E-1	H-3	R551	E-5	F-5	TP5	C-3	J-4
R374	E-1	H-3	R552	E-5	F-5	U190A	B-2	J-1
R375	E-1	H-3	R553	E-5	F-5	U190B	B-2	J-1
R376	E-1	H-3	R554	E-5	F-4	U190C	D-2	J-1
R377	D-2	H-3	R561	B-4	G-5	U190D	D-2	J-1
R378	D-2	H-3	R562	C-4	G-5	U190E	G-2	J-1
R380	E-1	H-3	R563	B-5	G-5	U190F	G-2	J-1
R381	A-1	I-3	R571	A-5	H-4	U560A	I-2	G-4
R382	B-1	I-3	R572	A-5	H-4	U560B	I-2	G-4
R383	B-1	I-3	R573	A-5	H-4	U560D	A-5	G-4
R384	B-1	I-3	R574	A-5	H-4	U560E	B-4	G-4
R385	B-1	I-3	R575	A-5	H-4	U560F	B-4	G-4
R386	C-1	I-3	R580	C-3	I-5	U570	B-5	H-5
R387	B-2	I-3	R581	C-3	I-5	U650	D-5	F-5
R388	A-2	I-3	R582	D-3	I-5	U660	D-5	F-5
R391	B-3	J-3	R583	E-3	I-4	U670	C-5	G-5
R392	A-3	J-3	R640	F-4	E-6	U680A	D-3	I-5
R393	B-3	J-3	R641	F-4	E-6	U680B	E-3	I-5

VARIABLE RESOLUTION

S6 b

CIRCUIT NUMBER	SCHEMATIC LOCATION	BOARD LOCATION	CIRCUIT NUMBER	SCHEMATIC LOCATION	BOARD LOCATION	CIRCUIT NUMBER	SCHEMATIC LOCATION	BOARD LOCATION
C106	I-2	A-1	C325	I-4	C-3	C523	D-4	C-5
C110	I-2	B-1	C329	B-4	C-3	C524	D-4	C-5
C133	B-2	D-1	C333	B-4	D-3	C525	D-4	C-5
C135	B-2	D-1	C334	B-3	D-3	C526	D-4	C-5
C141	B-1	E-1	C342	B-3	E-3	C527	D-4	C-5
C147	B-1	E-1	C345	B-3	E-3	C528	E-4	C-5
C191	B-6	J-1	C401	F-5	A-4	C529	E-4	C-5
C206	I-3	A-2	C402	I-3	A-4	C532	B-3	D-5
C210	I-2	B-2	C412	F-3	B-4	C533	C-4	D-5
C211	F-2	B-2	C413	G-3	B-4	C534	B-4	D-5
C212	F-2	B-2	C430	D-3	D-3	C535	B-4	D-4
C214	G-2	B-2	C431	E-3	D-4	C588	A-6	I-5
C220	E-2	C-2	C433	E-3	D-4	C590	A-6	J-5
C221	E-2	C-2	C434	D-3	D-4	C591	A-6	J-5
C230	E-2	D-2	C435	D-3	D-4	C600	I-1	A-5
C231	D-2	D-2	C447	A-2	E-4	C602	I-1	A-6
C232	B-2	D-2	C462	B-6	G-4	C607	I-1	A-6
C234	E-2	D-2	C500	J-2	A-5	C610	G-4	B-6
C236	B-5	D-2	C513	I-4	B-5	C611	H-4	B-6
C240	B-1	E-2	C514	H-4	B-5	C612	F-4	B-6
C302	I-3	A-3	C515	I-4	B-5	C613	G-4	B-6
C311	I-3	B-3	C516	H-4	B-5	C614	G-4	B-6
C314	F-3	B-3	C517	G-4	B-5	C615	G-4	B-6
C315	G-3	B-3	C518	F-4	B-5	C620	E-4	C-6
C317	G-3	B-3	C520	E-4	C-4	C621	C-4	D-6
C319	I-5	B-3	C521	F-4	C-5	C631	A-6	D-6
C322	I-4	B-3	C522	E-4	C-5	C673	A-6	H-5

300 Hz BANDPASS FILTER

S6 c

CIRCUIT NUMBER	SCHEMATIC LOCATION	BOARD LOCATION	CIRCUIT NUMBER	SCHEMATIC LOCATION	BOARD LOCATION	CIRCUIT NUMBER	SCHEMATIC LOCATION	BOARD LOCATION
C130	A-3	E-3	C630	G-3	B-3	R441	D-2	C-4
C131	A-3	E-3	C720	G-3	B-3	R442	D-2	C-4
C220	A-3	D-3	C721	H-3	B-3	R520	E-4	C-2
C221	A-3	D-3	C722	G-3	B-3	R521	E-3	C-2
C222	B-3	D-3	C723	G-3	B-3	R522	E-3	C-3
C230	A-3	D-3	C730	G-3	B-3	R523	E-3	C-3
C231	B-3	D-3	C731	G-3	B-3	R541	B-1	C-4
C232	B-3	D-3	C820	H-3	A-2	R542	C-1	C-4
C320	B-3	D-3	C821	H-3	A-2	R640	B-2	B-4
C321	B-3	D-2	Q421	D-4	C-2	R740	B-2	B-4
C322	C-3	C-2	Q443	D-2	C-4	R840	B-2	A-4
C323	C-3	C-3	Q510	E-4	C-2	R841	B-2	A-4
C412	E-4	C-2	Q540	B-1	C-4	R842	B-2	A-4
C430	D-3	C-3	R324	C-3	D-3	R843	B-1	A-4
C431	D-3	C-3	R325	C-3	D-3	R930	D-3	A-4
C524	F-3	C-3	R330	D-3	D-3	T420	D-3	C-3
C525	F-3	C-3	R410	E-4	C-2	U641	C-2	B-4
C526	E-3	C-3	R411	E-4	C-2	UY2210	A-3	D-2
C543	C-1	C-4	R422	D-4	C-2	Y310	C-3	D-2
C620	F-3	B-3	R440	D-2	C-4	Y610	F-3	B-2
						Y710	H-3	B-2

VARIABLE RESOLUTION

S6 b

CIRCUIT NUMBER	SCHEMATIC LOCATION	BOARD LOCATION	CIRCUIT NUMBER	SCHEMATIC LOCATION	BOARD LOCATION	CIRCUIT NUMBER	SCHEMATIC LOCATION	BOARD LOCATION
C682	A-6	I-6	Q504	G-6	A-5	R336	B-4	D-3
C683	B-6	I-6	Q511	I-4	B-5	R340	B-2	E-3
C684	A-6	I-6	Q536	B-4	D-4	R345	B-3	E-3
J150	C-1	F-7	Q537	B-3	D-5	R346	B-2	E-3
J620	H-1	D-12	Q603	I-1	A-6	R403	F-5	A-4
L516	J-2	A-5	Q604	I-1	A-6	R404	I-3	A-4
L549	A-2	E-4	R107	I-2	A-1	R410	I-3	B-4
L592	A-6	J-5	R113	I-2	B-1	R423	C-4	C-3
L593	A-6	J-5	R130	C-2	D-1	R434	B-4	D-4
L710	G-2	J-8	R131	C-2	D-1	R438	C-3	D-4
L730	D-2	G-8	R132	C-2	D-1	R448	A-2	E-4
L810	G-3	J-9	R134	B-2	D-1	R501	J-2	A-5
L830	D-3	G-9	R140	B-1	E-1	R502	I-4	A-5
L910	G-4	J-11	R142	B-1	E-1	R503	F-6	A-5
L911	F-4	J-11	R143	B-1	E-1	R530	C-4	D-4
L920	E-4	I-11	R145	B-2	E-1	R531	C-4	D-5
L921	C-4	H-11	R146	C-1	E-1	R532	C-4	D-5
Q116	I-2	B-1	R148	C-1	E-1	R538	B-3	D-5
Q136	B-2	D-1	R149	C-1	E-1	R548	B-3	E-5
Q144	B-1	E-1	R213	I-2	B-2	R605	I-1	A-6
Q145	B-1	E-1	R235	B-2	D-2	R606	I-1	A-6
Q215	I-2	B-2	R237	B-4	D-2	R608	I-1	A-6
Q233	B-2	D-2	R247	B-4	E-2	U300	G-5	A-3
Q310	I-2	B-3	R301	I-3	A-3	U400	F-5	A-4
Q312	I-4	B-3	R304	I-2	A-3	U560C	G-5	F-5
Q328	I-4	C-3	R313	I-2	B-3	U681	A-5	I-6
Q331	B-4	D-2	R316	I-4	B-3	Y811	F-3	H-9
Q332	B-4	D-3	R318	I-4	B-3	Y711	F-2	H-8
Q340	B-3	E-3	R320	I-4	B-2	Y720	E-2	G-8
Q411	I-3	B-4	R323	C-4	C-3	Y820	E-3	H-10
Q414	I-3	B-4	R324	C-4	C-3	Y821	E-3	G-9
Q440	B-2	E-3						

RF OPTIONS

S6 d

CIRCUIT NUMBER	SCHEMATIC LOCATION	BOARD LOCATION	CIRCUIT NUMBER	SCHEMATIC LOCATION	BOARD LOCATION	CIRCUIT NUMBER	SCHEMATIC LOCATION	BOARD LOCATION
C100	J-1	A-1	C385	A-1	G-2	C565	B-1	F-3
C111	J-2	B-1	C395	A-4	H-2	C570	B-1	G-3
C120	H-2	B-1	C406	J-5	A-3	C571	B-1	G-3
C142	D-2	D-1	C407	J-5	A-3	J110	J-2	A-4
C150	D-2	E-1	C408	J-5	A-3	J180	A-1	G-4
C180	A-1	G-1	C411	I-5	A-3	L110	J-2	A-1
C191	E-6	H-1	C412	I-5	A-3	L215	I-3	B-1
C205	J-3	A-2	C413	I-5	B-3	L236	H-3	C-2
C206	J-3	A-2	C414	I-5	B-3	L354	D-3	E-2
C207	J-3	A-2	C415	I-5	B-3	L370	C-3	F-2
C208	I-3	A-2	C416	H-1	A-3	L386	A-1	G-2
C209	I-3	A-2	C420	E-4	B-2	L513	H-1	B-3
C210	I-3	B-1	C421	H-5	B-3	L523	G-1	B-3
C211	I-2	B-1	C422	H-5	B-3	L550	D-1	E-3
C220	I-2	B-1	C423	H-5	B-3	L560	C-1	E-3
C221	I-2	B-1	C424	H-5	B-3	L630	I-2	C-4
C222	I-2	B-1	C425	H-5	B-3	L640	H-2	D-4
C223	I-2	C-1	C430	H-5	C-3	L650	C-2	E-4
C230	H-2	C-1	C431	G-5	C-3	L660	B-2	F-4
C231	H-2	C-1	C432	G-6	D-3	L790	C-6	H-4
C232	H-2	C-1	C433	F-6	D-3	P790	A-5	H-4
C233	G-2	C-1	C434	H-6	C-3	Q112	J-2	B-1
C234	G-3	C-2	C435	H-6	C-3	Q113	J-2	B-1
C240	H-2	D-1	C436	G-6	D-3	Q143	D-2	D-1
C241	G-2	D-1	C438	G-6	D-2	Q200	J-3	A-1
C242	E-2	D-1	C441	F-6	D-3	Q201	J-3	A-1
C243	E-2	D-1	C444	E-6	E-3	Q245	F-2	D-1
C244	E-2	D-1	C445	E-6	E-3	Q249	F-3	D-2
C248	F-4	D-2	C450	D-6	E-2	Q276	A-2	G-1
C249	F-2	D-2	C451	D-6	F-2	Q280	A-2	G-1
C250	C-2	E-1	C452	E-6	E-3	Q300	J-4	A-2
C251	C-2	E-1	C453	D-5	E-3	Q301	J-4	A-2
C252	E-3	E-2	C454	D-6	E-3	Q320	E-4	B-2
C260	C-2	E-1	C455	D-6	E-3	Q339	H-6	C-2
C261	C-2	F-1	C456	D-6	E-3	Q377	B-3	G-2
C262	B-2	F-1	C457	D-5	F-3	Q378	B-4	G-2
C263	B-2	F-1	C462	C-6	F-3	Q379	B-4	G-2
C270	B-2	F-1	C463	C-6	F-3	Q380	B-3	G-2
C271	B-2	F-1	C464	B-6	F-3	Q396	A-6	H-2
C272	B-2	G-1	C465	C-6	G-3	Q400	J-5	A-2
C273	A-2	G-1	C466	C-6	G-3	Q401	J-5	A-2
C274	A-2	G-1	C472	C-4	F-2	Q405	J-1	A-3
C283	A-2	G-1	C473	C-4	G-2	Q406	J-1	A-3
C290	C-6	H-1	C491	C-5	H-3	Q430	F-6	D-2
C292	D-6	H-1	C503	I-1	A-3	Q460	B-6	G-3
C305	J-4	A-2	C504	I-1	A-3	Q461	B-5	G-3
C306	J-4	A-2	C505	I-1	A-3	Q470	B-1	G-3
C307	J-4	A-2	C506	I-1	A-3	Q471	B-1	G-3
C312	I-3	B-2	C507	I-1	A-3	Q539	F-1	D-3
C320	H-3	B-2	C510	H-1	A-3	R101	J-1	A-1
C321	H-3	C-2	C511	H-1	B-3	R140	D-3	D-1
C322	H-3	C-2	C512	H-1	B-3	R141	D-2	D-1
C323	E-4	C-2	C520	G-1	B-3	R151	D-2	E-1
C324	F-4	B-2	C521	G-1	C-3	R152	C-2	E-1
C325	H-4	B-2	C522	G-1	C-3	R153	C-2	E-1
C326	F-4	B-2	C530	G-1	C-3	R202	J-3	A-2
C333	G-3	C-2	C531	G-1	C-3	R203	J-3	A-2
C334	G-3	C-2	C532	F-1	C-3	R204	J-3	A-2
C335	F-3	D-2	C533	F-1	C-3	R212	I-2	B-1
C343	F-3	D-2	C537	F-1	C-3	R213	I-2	B-1
C344	F-3	D-2	C540	E-1	D-3	R214	I-2	B-1
C350	E-3	E-2	C541	E-1	D-3	R235	G-3	D-2
C352	D-3	E-2	C542	E-1	D-3	R240	E-2	D-1
C353	D-3	E-2	C543	D-1	D-3	R241	F-3	D-1
C361	C-3	F-2	C544	D-1	D-3	R242	E-2	D-1
C362	C-3	F-2	C551	D-1	E-3	R243	D-2	D-1
C363	C-3	F-2	C552	D-1	E-3	R244	G-2	D-1
C371	B-4	F-2	C553	C-1	E-3	R245	G-2	D-1
C372	C-3	F-2	C561	C-1	F-3	R246	E-3	D-2
C374	B-3	G-2	C562	C-1	F-3	R247	F-4	D-2
C375	B-3	G-2	C563	C-1	F-3			
C384	B-3	G-2	C564	C-1	F-3			

RF OPTIONS

(Continued)

S6 d

CIRCUIT NUMBER	SCHEMATIC LOCATION	BOARD LOCATION	CIRCUIT NUMBER	SCHEMATIC LOCATION	BOARD LOCATION	CIRCUIT NUMBER	SCHEMATIC LOCATION	BOARD LOCATION
R248	F-3	D-2	R393	A-5	H-2	R545	F-1	D-3
R249	F-2	D-1	R394	A-5	H-2	R546	E-1	D-3
R253	G-2	D-1	R397	A-5	H-2	R547	E-1	D-3
R255	E-2	E-1	R398	A-6	H-2	R548	E-1	D-3
R275	A-2	G-1	R399	A-6	H-2	R572	B-1	G-3
R281	A-2	G-1	R402	J-5	A-3	R573	B-1	G-3
R282	A-2	G-1	R403	J-5	A-3	R574	B-1	G-3
R290	A-6	H-2	R404	J-5	A-3	T144	D-2	D-1
R291	A-6	H-2	R430	H-6	C-3	T245	F-2	D-1
R302	J-4	A-2	R431	H-6	C-3	T320	E-4	B-2
R303	J-4	A-2	R432	H-6	C-3	T345	F-3	D-2
R304	J-4	A-2	R433	H-5	C-3	T430	F-6	D-3
R313	F-4	B-2	R434	G-6	D-3	T530	E-1	D-3
R314	F-4	B-2	R435	G-6	D-3	T535	H-6	C-3
R315	F-4	B-2	R436	G-6	D-3	U190	D-6	H-1
R325	E-4	B-2	R437	F-5	D-3	U390	A-4	H-2
R326	F-4	B-2	R438	G-6	D-3	U490	A-3	H-2
R327	E-5	C-2	R439	F-6	D-3	U590	C-5	H-3
R328	E-4	C-2	R440	F-6	E-3	U590A	B-6	H-3
R329	E-4	C-2	R442	E-6	E-3	U590B	D-5	H-3
R330	D-4	C-2	R443	E-6	E-3	U590C	D-4	H-3
R331	G-3	D-2	R467	C-6	G-3	U590D	D-5	H-3
R332	G-3	D-2	R468	C-5	G-3	U590E	E-5	H-3
R338	H-6	C-2	R469	B-5	G-3	U590F	E-5	H-3
R339	H-6	D-2	R474	C-4	G-2	T310	G-4	A-2
R340	F-3	D-2	R475	C-4	G-2	T336	C-4	C-2
R341	E-3	D-2	R476	B-4	G-2	Y224	H-4	B-2
R342	E-3	D-2	R500	I-1	A-3	Y225	H-4	B-2
R376	B-3	G-2	R501	I-1	A-3	Y311	G-4	B-2
R381	B-3	G-2	R502	I-1	A-3	Y337	D-4	C-2
R382	B-3	G-2	R534	F-1	C-3	Y360	D-3	E-2
R383	A-1	G-2	R535	G-1	C-3	Y417	I-5	B-3
R390	A-5	H-2	R536	F-1	C-3	Y426	H-5	C-3
R391	A-4	H-2	R537	F-1	C-3	Y446	E-6	E-3
R392	A-5	H-2	R538	F-1	C-3	Y458	C-6	F-3

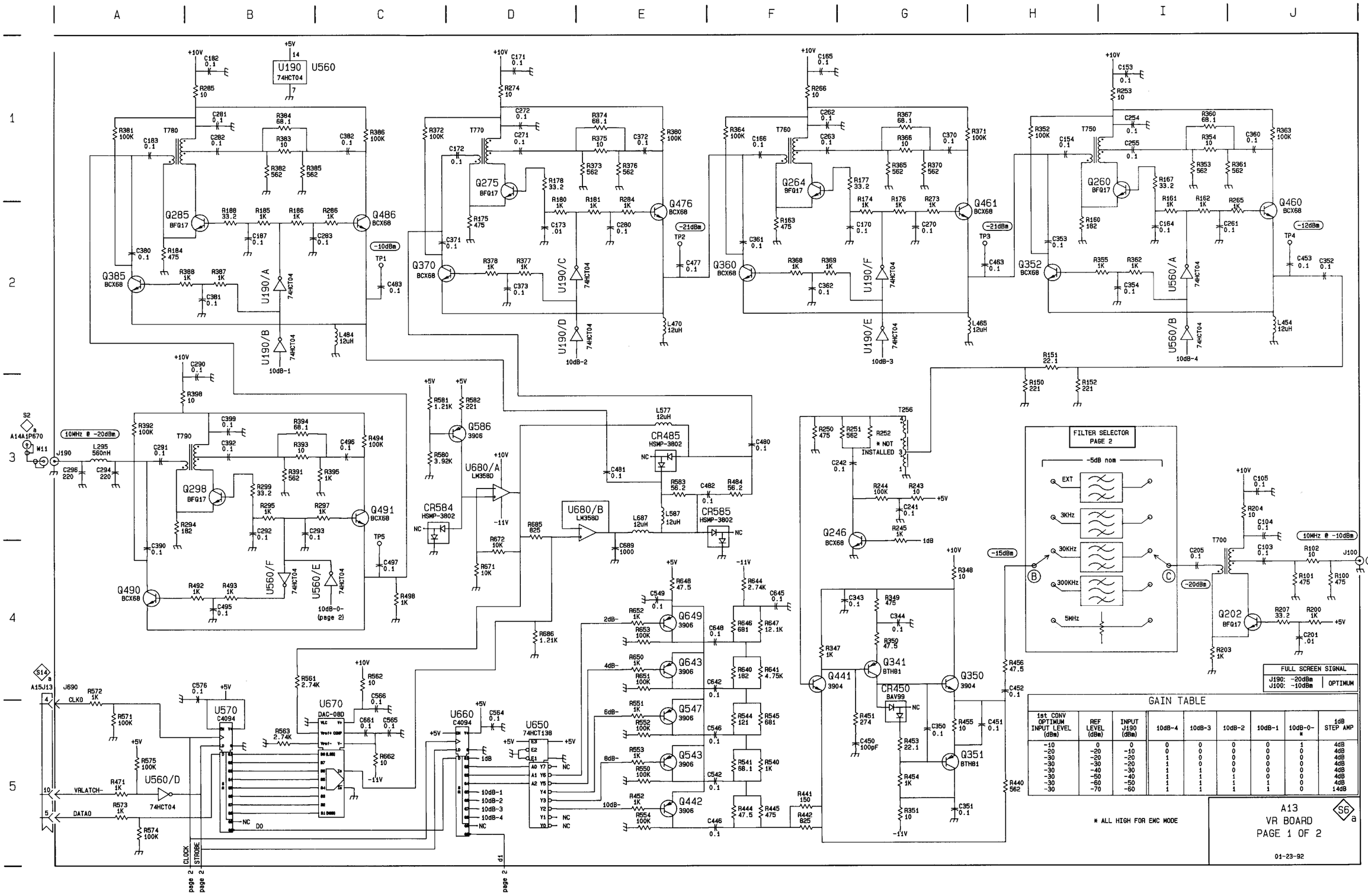

FULL SCREEN SIGNAL	
J190: -20dBm J100: -10dBm	OPTIMUM

GAIN TABLE

1st CONV OPTIMUM INPUT LEVEL (dBm)	REF LEVEL (dBm)	INPUT J190 (dBm)	10dB-4	10dB-3	10dB-2	10dB-1	10dB-0-*	1dB STEP AMP
-10	0	0	0	0	0	0	1	4dB
-20	-20	-10	0	0	0	0	0	4dB
-30	-20	-20	1	0	0	0	0	4dB
-30	-30	-20	1	0	0	0	0	4dB
-30	-40	-30	1	1	0	0	0	4dB
-30	-50	-40	1	1	1	0	0	4dB
-30	-60	-50	1	1	1	1	0	4dB
-30	-70	-60	1	1	1	1	0	14dB

* ALL HIGH FOR EMC MODE

A13
VR BOARD
PAGE 1 OF 2

S6 a

01-23-92

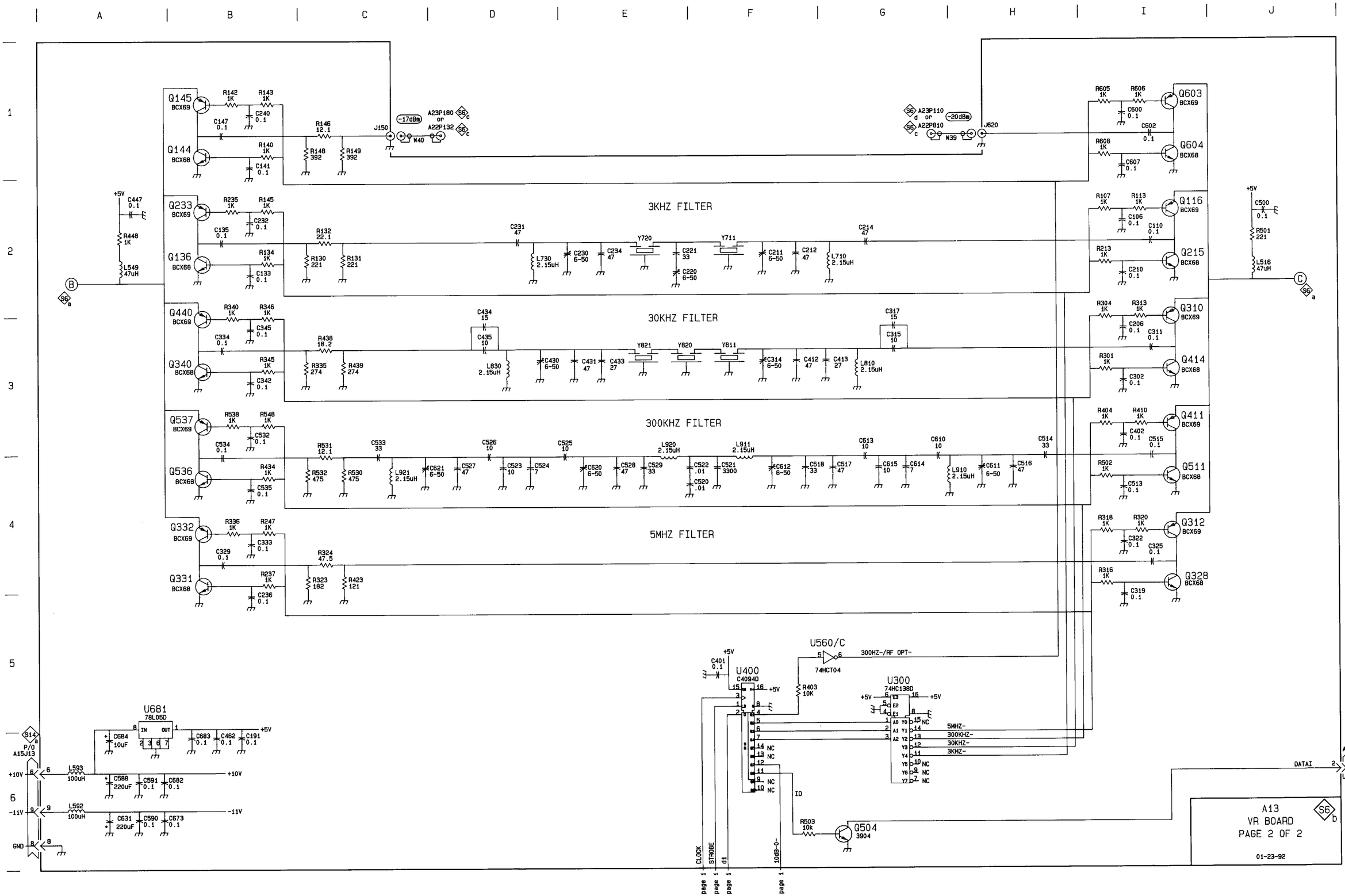

3KHZ FILTER
30KHZ FILTER
300KHZ FILTER
5MHZ FILTER
Q145 BCX69
Q144 BCX68
Q233 BCX69
Q136 BCX68
Q440 BCX69
Q340 BCX68
Q537 BCX69
Q536 BCX68
Q332 BCX69
Q331 BCX68
Q603 BCX69
Q604 BCX68
Q116 BCX69
Q215 BCX68
Q310 BCX69
Q414 BCX68
Q411 BCX69
Q511 BCX68
Q312 BCX69
Q328 BCX68
J150
-17dBm
W40
A23P180 or A22P132
J620
-20dBm
W39
A23P110 or A22P810
U560/C
74HCT04
300HZ-/RF OPT-
U400
C4094D
U300
74HC138D
5MHZ-
300KHZ-
30KHZ-
3KHZ-
U681
78L05D
Q504
3904
R503 10k
R403 10K
DATAI
CLOCK
STROBE
d1
10dB-0-
A13
VR BOARD
PAGE 2 OF 2
01-23-92

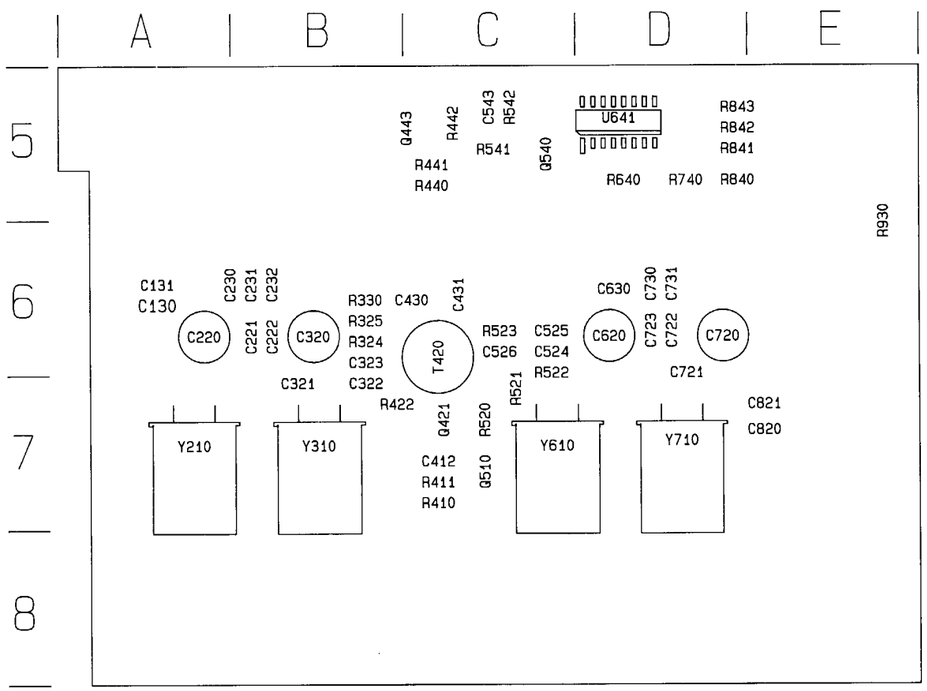

A22–300 Hz Bandpass Filter Board (Front)

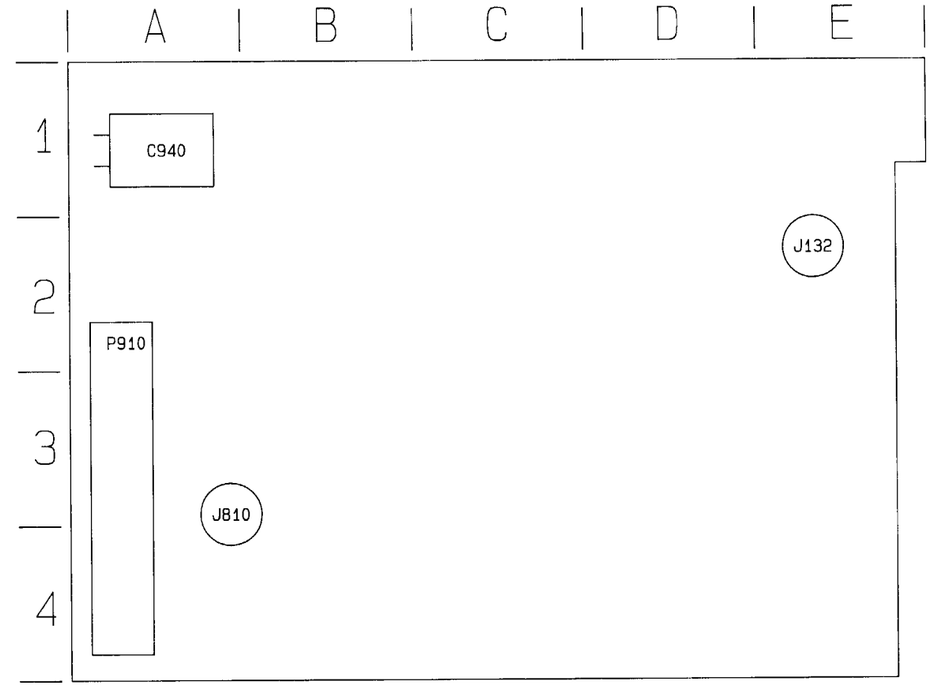

A22–300 Hz Bandpass Filter Board (Rear)

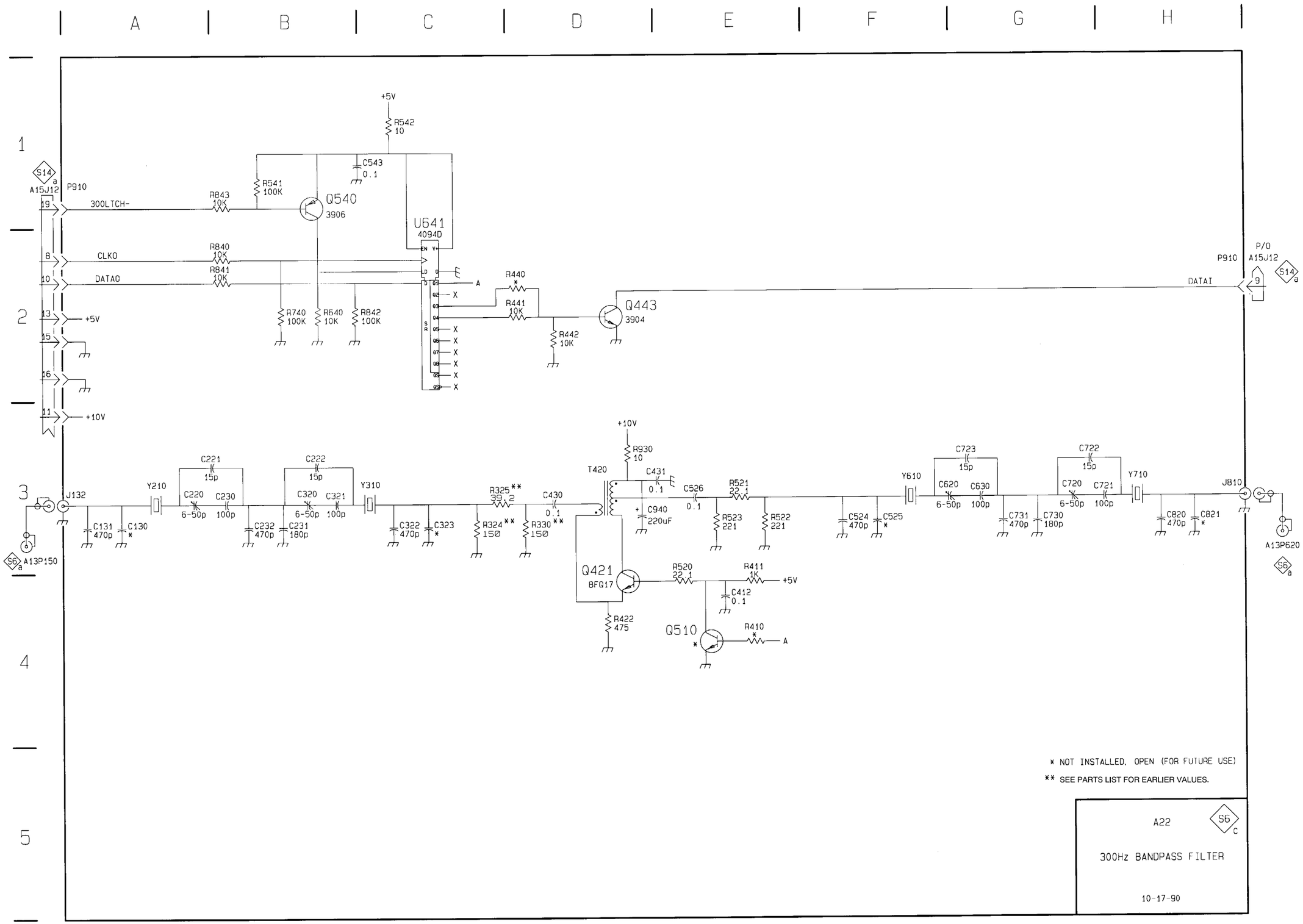
A
B
C
D
E
F
G
H
1
2
3
4
5
S14
a
A15J12
P910
19
300LTCH-
8
CLKO
10
DATAO
13
+5V
15
16
11
+10V
R843
10K
R840
10K
R841
10K
R541
100K
Q540
3906
+5V
R542
10
C543
0.1
U641
4094D
EN
V+
LD
D
Q1
Q2
Q3
Q4
Q5
Q6
Q7
Q8
QS
QSP
S
R
A
X
R740
100K
R640
10K
R842
100K
R440
*
R441
10K
R442
10K
Q443
3904
P910
P/O
A15J12
S14
a
9
DATAI
J132
C131
470p
C130
*
Y210
C221
15p
C220
6-50p
C230
100p
C232
470p
C222
15p
C320
6-50p
C321
100p
C231
180p
Y310
C322
470p
C323
*
R325**
39.2
R324**
150
C430
0.1
R330**
150
T420
+10V
R930
10
C431
0.1
C940
220uF
C526
0.1
R521
22.1
R523
221
R522
221
C524
470p
C525
*
Y610
C723
15p
C620
6-50p
C630
100p
C731
470p
C730
180p
C722
15p
C720
6-50p
C721
100p
Y710
C820
470p
C821
*
J810
A13P620
S6
a
A13P150
Q421
BFQ17
R520
22.1
R411
1K
+5V
C412
0.1
R422
475
Q510
*
R410
*
A
* NOT INSTALLED, OPEN (FOR FUTURE USE)
** SEE PARTS LIST FOR EARLIER VALUES.
A22
S6
c
300Hz BANDPASS FILTER
10-17-90

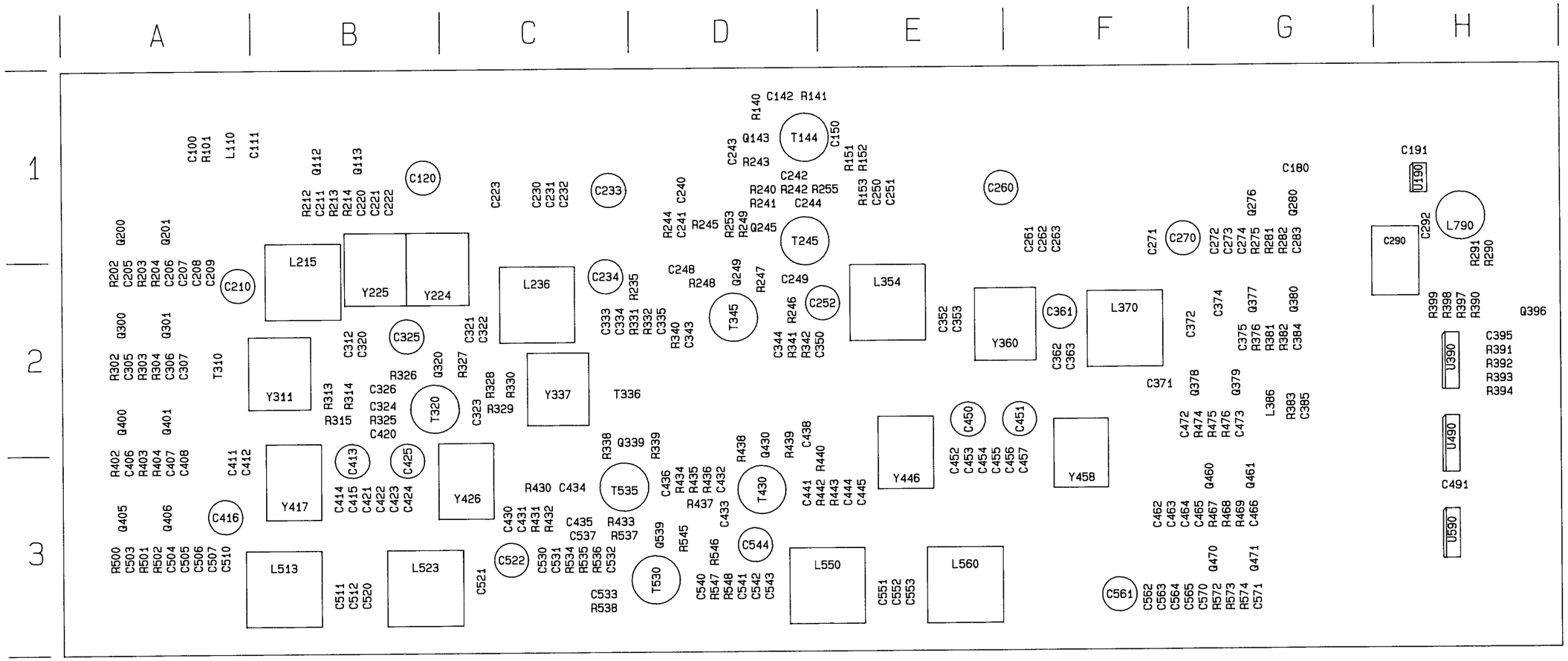

A23–RF Options Board

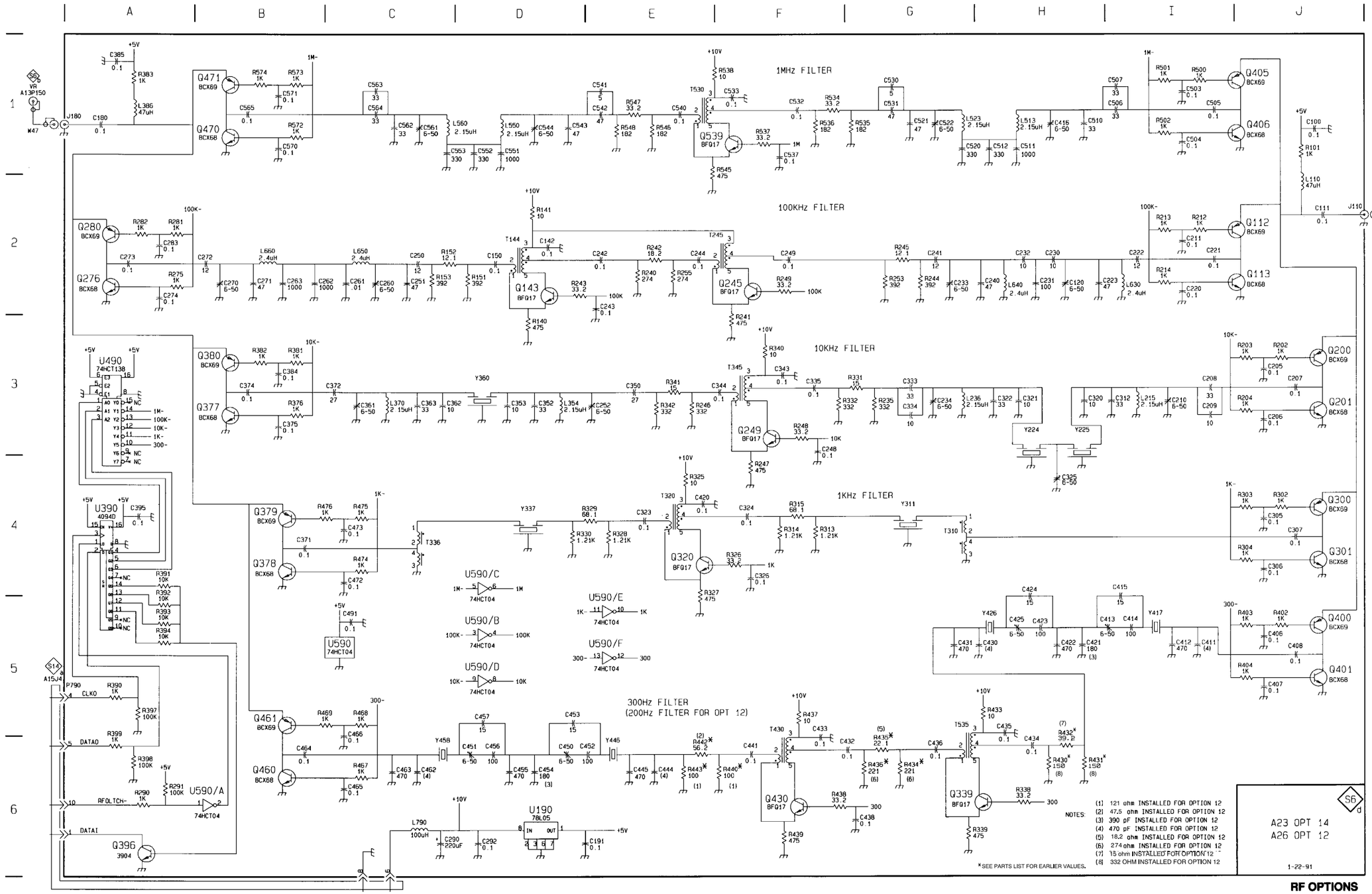

NOTES:

(1) 121 ohm INSTALLED FOR OPTION 12
(2) 47.5 ohm INSTALLED FOR OPTION 12
(3) 390 pF INSTALLED FOR OPTION 12
(4) 470 pF INSTALLED FOR OPTION 12
(5) 18.2 ohm INSTALLED FOR OPTION 12
(6) 274 ohm INSTALLED FOR OPTION 12
(7) 15 ohm INSTALLED FOR OPTION 12
(8) 332 OHM INSTALLED FOR OPTION 12

*SEE PARTS LIST FOR EARLIER VALUES.

RF OPTIONS

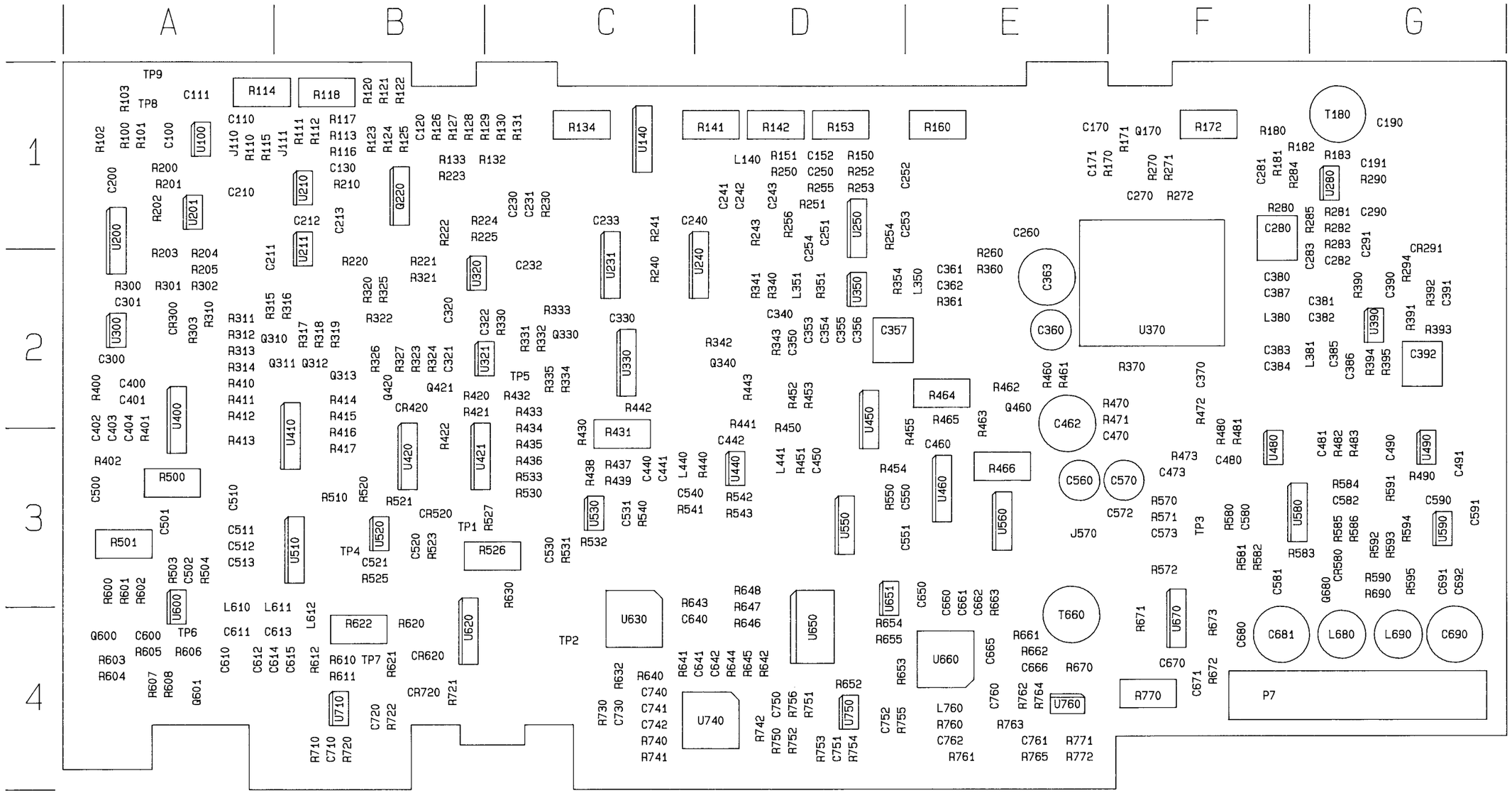

A7–LOG Board (Front)

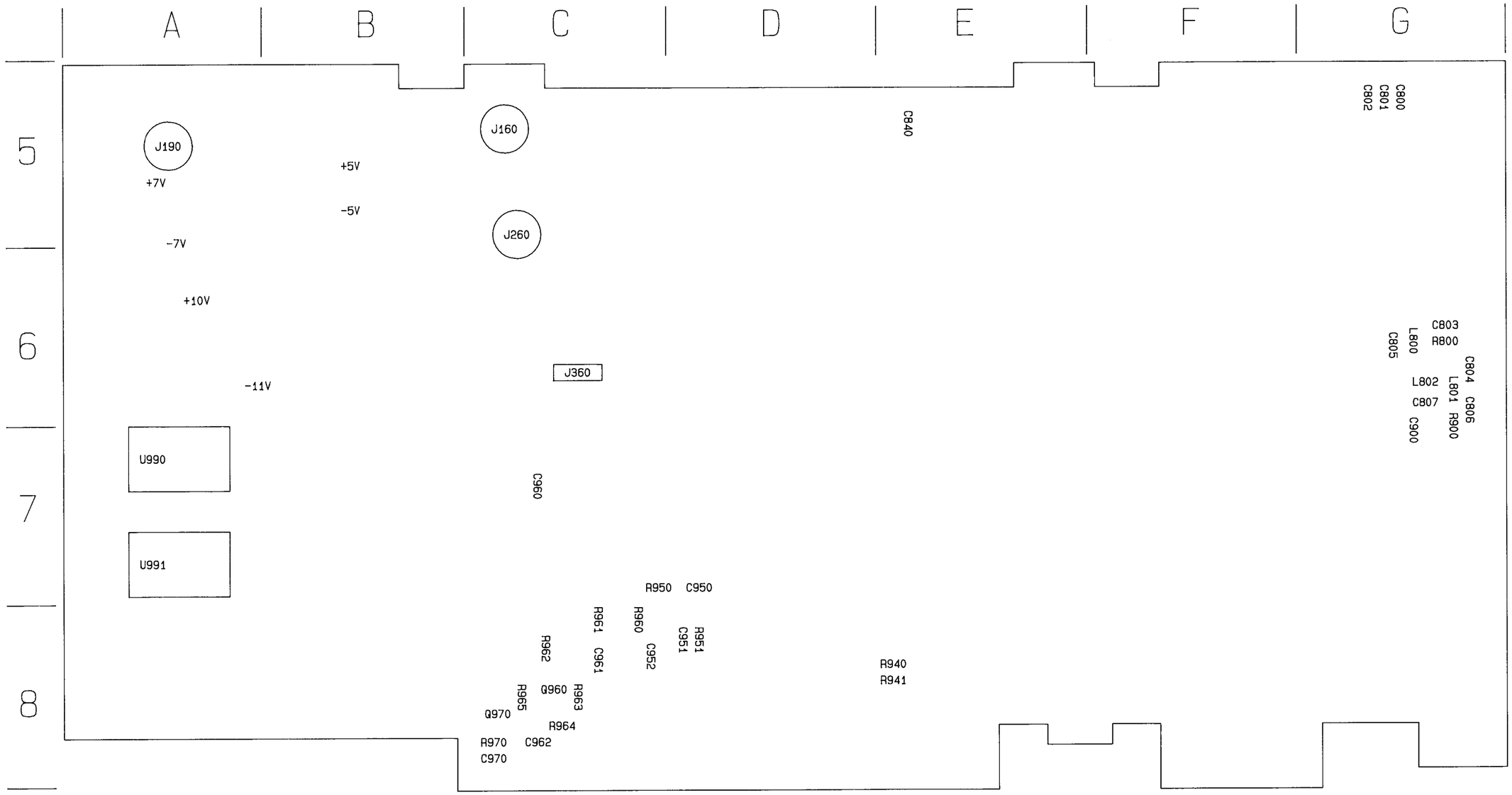

A7–LOG Board (Rear)

A7 LOG BOARD

S8 a

CIRCUIT NUMBER	SCHEMATIC LOCATION	BOARD LOCATION	CIRCUIT NUMBER	SCHEMATIC LOCATION	BOARD LOCATION	CIRCUIT NUMBER	SCHEMATIC LOCATION	BOARD LOCATION
C152	J-6	D-1	C692	A-8	G-3	R290	B-2	G-1
C170	C-5	E-1	C730	H-1	C-4	R294	B-5	G-2
C171	C-4	E-1	C740	E-5	C-4	R331	E-8	C-2
C190	A-2	G-1	C741	E-5	C-4	R332	E-8	C-2
C191	B-2	G-1	C742	E-5	C-4	R333	E-8	C-2
C233	G-7	C-1	C750	D-5	D-4	R334	F-6	C-2
C240	H-6	C-1	C751	F-5	D-4	R335	F-6	C-2
C241	J-7	D-1	C752	F-4	D-4	R340	I-4	D-2
C242	J-7	D-1	C760	E-2	E-4	R341	F-7	D-2
C243	J-7	D-1	C761	C-1	E-4	R342	F-8	D-2
C250	I-6	D-1	C762	E-2	E-4	R343	J-4	D-2
C251	J-6	D-1	C840	H-7	E-5	R351	I-4	D-2
C252	I-5	E-1	C950	F-3	D-7	R354	I-3	D-2
C253	J-5	E-1	C951	F-3	D-8	R360	I-1	E-2
C254	I-4	D-2	C952	G-1	C-8	R361	J-4	E-2
C260	J-2	E-1	C960	E-1	C-7	R390	B-4	G-2
C270	C-5	F-1	C961	F-2	C-8	R391	A-5	G-2
C280	A-1	F-1	C962	D-2	C-8	R392	B-5	G-2
C281	B-3	F-1	C970	D-1	C-8	R393	A-5	G-2
C282	C-4	G-2	CR291	B-4	G-1	R394	A-4	G-2
C283	B-4	G-2	J160	A-6	C-5	R395	A-4	G-2
C290	B-4	G-1	J190	A-2	A-5	R430	G-5	C-3
C291	B-5	G-1	J260	J-2	C-5	R431	G-5	C-3
C330	G-6	C-2	J570	B-1	E-3	R437	G-4	C-3
C340	I-4	D-2	L140	J-7	D-1	R438	H-5	C-3
C350	J-3	D-2	L350	I-4	E-2	R439	G-4	C-3
C353	I-3	D-2	L351	I-4	D-2	R440	G-3	D-3
C354	I-3	D-2	L380	A-1	F-2	R441	F-4	D-2
C355	I-3	D-2	L381	B-1	G-2	R442	G-5	C-2
C356	I-3	D-2	L440	G-3	C-3	R443	F-8	D-2
C357	I-3	D-2	L441	G-3	D-3	R450	G-4	D-2
C361	I-2	E-2	L680	A-7	G-4	R451	G-3	D-3
C362	I-4	E-2	L690	A-8	G-4	R452	H-2	D-2
C380	A-1	F-2	L760	E-2	E-4	R453	I-1	D-2
C381	A-1	G-2	P7	A-6	F-4	R454	C-6	D-3
C382	B-1	G-2	P7	A-4	F-4	R455	D-5	E-3
C383	B-1	F-2	Q170	C-4	F-1	R464	C-5	E-2
C384	B-1	F-2	Q330	E-8	C-2	R465	C-5	E-2
C385	B-1	G-2	Q340	F-8	D-2	R490	D-7	G-3
C386	A-5	G-2	Q960	E-2	C-8	R531	H-5	C-3
C387	A-2	F-2	Q970	D-1	C-8	R532	H-5	C-3
C390	A-4	G-2	R150	I-5	D-1	R540	H-4	C-3
C391	B-5	G-2	R151	J-7	D-1	R541	H-3	C-3
C392	B-1	G-2	R153	I-5	D-1	R542	G-4	D-3
C440	G-5	C-3	R160	A-4	E-1	R543	G-3	D-3
C441	F-3	C-3	R170	C-4	F-1	R550	D-6	D-3
C442	G-3	D-3	R171	C-4	F-1	R591	D-7	G-3
C450	G-3	D-3	R172	A-5	F-1	R592	D-8	G-3
C460	D-5	E-3	R180	A-2	F-1	R593	D-8	G-3
C490	C-7	G-3	R181	B-3	F-1	R594	D-8	G-3
C491	D-7	G-3	R182	B-2	F-1	R632	H-1	C-4
C530	H-4	C-3	R183	B-2	G-1	R640	H-1	C-4
C531	H-4	C-3	R240	F-7	C-2	R641	E-6	C-4
C540	H-3	C-3	R241	F-7	C-1	R642	D-4	D-4
C550	D-6	E-3	R243	F-6	D-1	R643	H-2	D-3
C551	D-6	E-3	R250	J-7	D-1	R644	D-5	D-4
C581	B-7	F-3	R251	J-6	D-1	R645	D-4	D-4
C590	D-8	G-3	R252	I-5	D-1	R646	D-4	D-4
C591	C-8	G-3	R253	J-6	D-1	R647	D-3	D-3
C640	G-1	D-4	R254	J-5	D-1	R648	D-3	D-3
C641	E-5	D-4	R255	J-6	D-1	R652	F-5	D-4
C642	E-5	D-4	R256	I-4	D-1	R653	F-1	D-4
C650	F-3	E-3	R260	I-2	E-1	R654	F-3	D-4
C660	G-1	E-3	R270	C-5	F-1	R655	F-3	D-4
C661	G-2	E-3	R271	C-4	F-1	R661	C-2	E-4
C662	G-2	E-3	R272	C-5	F-1	R662	C-2	E-4
C665	F-2	E-4	R280	B-3	F-1	R663	F-2	E-3
C666	C-2	E-4	R281	B-4	G-1	R670	C-3	E-4
C680	A-7	F-4	R282	B-4	G-1	R730	H-1	C-4
C681	B-7	F-4	R283	C-4	G-1	R740	E-4	C-4
C690	B-8	G-4	R284	B-3	F-1	R741	F-5	C-4
C691	B-8	G-3	R285	B-4	G-1	R742	D-5	D-4

LOG BOARD

(Continued)

S8 a

CIRCUIT NUMBER	SCHEMATIC LOCATION	BOARD LOCATION	CIRCUIT NUMBER	SCHEMATIC LOCATION	BOARD LOCATION	CIRCUIT NUMBER	SCHEMATIC LOCATION	BOARD LOCATION
R750	D-5	D-4	R963	D-2	C-8	U530	H-4	C-3
R751	F-5	D-4	R964	D-2	C-8	U550	E-3	D-3
R752	F-5	D-4	R965	E-1	C-8	U550A	D-3	D-3
R753	F-5	D-4	R970	D-1	C-8	U550B	D-3	D-3
R754	F-5	D-4	T180	A-2	G-1	U550C	D-2	D-3
R755	F-4	D-4	T660	C-2	E-4	U560	E-1	E-3
R756	F-5	D-4	TP1	I-5	B-3	U560A	D-1	E-3
R760	E-2	E-4	TP2	F-4	C-4	U560B	E-1	E-3
R761	F-2	E-4	U140	H-7	C-1	U560C	E-1	E-3
R762	E-2	E-4	U231	F-7	C-2	U590	C-8	G-3
R763	C-2	E-4	U240	H-6	D-2	U630A	H-1	C-4
R764	C-3	E-4	U250	J-5	D-1	U630B	I-1	C-4
R765	C-1	E-4	U280	B-3	G-1	U630C	H-2	C-4
R770	C-3	F-4	U330	F-6	C-2	U630D	G-1	C-4
R771	C-1	E-4	U350	J-3	D-2	U650	E-3	D-4
R772	C-1	E-4	U390A	A-4	G-2	U651	F-3	D-3
R940	J-2	E-8	U390B	A-5	G-2	U660	F-1	E-4
R941	H-2	E-8	U440	G-3	D-3	U740	E-5	D-4
R950	F-3	C-7	U450A	C-6	D-2	U750	F-4	D-4
R951	F-4	D-8	U450B	C-6	D-2	U760	C-1	E-4
R960	G-1	C-8	U460	D-5	E-3	U990	B-7	A-7
R961	F-2	C-8	U490	C-7	G-3	U991	B-8	A-7
R962	E-2	C-8						

LOG BOARD

S8 b

CIRCUIT NUMBER	SCHEMATIC LOCATION	BOARD LOCATION	CIRCUIT NUMBER	SCHEMATIC LOCATION	BOARD LOCATION	CIRCUIT NUMBER	SCHEMATIC LOCATION	BOARD LOCATION
C100	D-7	A-1	J360	J-7	C-6	R312	E-5	A-2
C110	D-6	A-1	L610	D-4	A-3	R313	E-6	A-2
C111	E-1	A-1	L611	C-4	B-3	R314	F-6	A-2
C120	I-1	B-1	L612	C-4	B-4	R315	E-6	A-2
C130	G-2	B-1	L800	A-1	G-6	R316	F-6	B-2
C200	C-1	A-1	L801	A-2	G-6	R317	F-5	B-2
C210	F-2	A-1	L802	A-2	G-6	R318	G-6	B-2
C211	G-3	A-2	P7	A-8	F-4	R319	G-5	B-2
C212	F-3	B-1	P7	J-4	F-4	R320	H-1	B-2
C213	G-2	B-1	Q220	J-2	B-1	R321	G-1	B-2
C230	I-3	C-1	Q220A	F-2	B-1	R322	E-7	B-2
C231	I-2	C-1	Q220B	H-1	B-1	R323	F-7	B-2
C232	D-1	C-2	Q220C	G-2	B-1	R324	J-4	B-2
C300	D-1	A-2	Q220D	J-1	B-1	R325	I-1	B-2
C301	D-1	A-2	Q310	F-5	B-2	R326	H-7	B-2
C320	D-1	B-2	Q311	F-5	B-2	R327	F-8	B-2
C321	J-4	B-2	Q312	G-5	B-2	R330	J-3	C-2
C322	J-4	C-2	Q313	G-5	B-2	R370	I-6	F-2
C360	I-6	E-2	Q420	F-8	B-2	R400	C-1	A-2
C363	J-6	E-2	Q421	F-8	B-2	R401	C-2	A-2
C370	H-7	F-2	Q460	H-8	E-2	R402	D-5	A-3
C400	C-2	A-2	Q600	C-4	A-4	R410	F-6	A-2
C401	C-2	A-2	Q601	C-5	A-4	R411	F-5	A-2
C402	C-3	A-2	Q680	C-7	G-3	R412	G-4	A-2
C403	C-2	A-2	R100	D-1	A-1	R413	F-4	A-3
C404	C-2	A-2	R101	D-1	A-1	R414	F-4	B-2
C462	J-7	E-2	R102	E-2	A-1	R415	F-4	B-2
C470	J-7	F-3	R103	E-2	A-1	R416	F-4	B-3
C473	I-7	F-3	R110	E-2	A-1	R417	F-4	B-3
C480	D-5	F-3	R111	D-2	B-1	R420	J-6	B-2
C481	D-5	G-3	R112	D-1	B-1	R421	J-6	B-2
C500	D-5	A-3	R113	F-7	B-1	R422	G-7	B-3
C501	D-5	A-3	R114	F-2	A-1	R432	J-5	C-2
C502	E-3	A-3	R115	F-1	A-1	R433	J-5	C-2
C510	H-5	A-3	R116	F-1	B-1	R434	J-6	C-2
C511	H-5	A-3	R117	D-2	B-1	R435	J-5	C-3
C512	H-5	A-3	R118	D-2	B-1	R436	J-6	C-3
C513	H-5	A-3	R120	I-2	B-1	R460	J-7	E-2
C520	I-4	B-3	R121	I-1	B-1	R461	J-7	E-2
C521	I-4	B-3	R122	I-1	B-1	R462	G-8	E-2
C560	J-7	E-3	R123	H-2	B-1	R463	G-8	E-2
C570	J-7	F-3	R124	H-2	B-1	R466	H-8	E-3
C572	I-8	F-3	R125	H-1	B-1	R470	J-7	F-2
C573	H-8	F-3	R126	I-1	B-1	R471	J-7	F-2
C580	C-6	F-3	R127	J-1	B-1	R472	H-6	F-2
C582	C-6	G-3	R128	J-1	B-1	R473	H-6	F-3
C600	E-4	A-4	R129	J-2	C-1	R480	D-5	F-3
C610	D-4	A-4	R130	J-2	C-1	R481	D-6	F-3
C611	D-4	A-4	R131	J-2	C-1	R482	I-8	G-3
C612	C-4	A-4	R132	G-2	C-1	R483	I-8	G-3
C613	C-4	B-4	R133	G-2	B-1	R500	C-4	A-3
C614	C-4	A-4	R134	H-3	C-1	R501	D-3	A-3
C615	C-4	B-4	R141	H-1	D-1	R503	E-4	A-3
C670	H-6	F-4	R142	G-1	D-1	R504	E-3	A-3
C671	H-6	F-4	R200	D-2	A-1	R510	E-7	B-3
C710	B-4	B-4	R201	D-2	A-1	R520	F-7	B-3
C720	B-3	B-4	R202	D-2	A-1	R521	F-7	B-3
C800	E-1	G-5	R203	B-1	A-2	R523	I-3	B-3
C801	E-1	G-5	R204	B-2	A-2	R525	I-4	B-3
C802	E-1	G-5	R205	B-2	A-2	R526	A-4	C-3
C803	A-1	G-6	R210	G-2	B-1	R527	A-4	C-3
C804	A-2	G-6	R220	H-1	B-2	R530	J-6	C-3
C805	A-1	G-6	R221	H-1	B-2	R533	J-5	C-3
C806	A-2	G-6	R222	F-3	B-1	R570	I-7	F-3
C807	A-2	G-6	R223	H-2	B-1	R571	I-8	F-3
C900	A-2	G-7	R224	G-1	C-1	R572	I-6	F-3
CR300	B-1	A-2	R225	G-1	C-1	R580	C-6	F-3
CR420	G-7	B-2	R230	H-3	C-1	R581	C-6	F-3
CR520	F-6	B-3	R300	B-2	A-2	R582	C-5	F-3
CR580	C-7	G-3	R301	B-2	A-2	R583	B-6	F-3
CR620	G-6	B-4	R302	B-2	A-2	R584	C-6	G-3
CR720	D-8	B-4	R303	B-1	A-2	R585	C-5	G-3
J110	E-2	A-1	R310	B-2	A-2	R586	B-6	G-3
J111	F-1	B-1	R311	E-5	A-2	R590	C-7	G-3

LOG BOARD

(Continued)

S8 b

CIRCUIT NUMBER	SCHEMATIC LOCATION	BOARD LOCATION	CIRCUIT NUMBER	SCHEMATIC LOCATION	BOARD LOCATION	CIRCUIT NUMBER	SCHEMATIC LOCATION	BOARD LOCATION
R595	C-7	G-3	R800	A-1	G-6	U320B	D-7	B-2
R600	D-4	A-3	R900	A-3	G-6	U321	J-4	C-2
R601	D-4	A-3	TP3	H-6	F-3	U370	I-7	F-2
R602	D-3	A-3	TP4	I-4	B-3	U400	J-2	A-2
R603	B-4	A-4	TP5	J-4	C-2	U400A	C-2	A-2
R604	B-4	A-4	TP6	E-3	A-4	U400B	C-2	A-2
R605	E-4	A-4	TP7	B-4	B-4	U400C	E-2	A-2
R606	D-4	A-4	TP8	G-1	A-1	U400D	E-2	A-2
R607	C-4	A-4	TP9	B-1	A-1	U410	G-3	B-3
R608	C-5	A-4	U100A	D-1	A-1	U420A	H-7	B-3
R610	C-4	B-4	U100B	F-1	A-1	U420B	F-7	B-3
R611	B-4	B-4	U200	J-2	A-1	U420C	I-4	B-3
R612	A-4	B-4	U200A	B-2	A-1	U421	I-5	B-3
R620	G-6	B-4	U200B	B-2	A-1	U480A	D-5	F-3
R621	B-4	B-4	U200C	B-1	A-1	U480B	I-7	F-3
R622	A-4	B-4	U200D	C-1	A-1	U510	H-4	B-3
R630	A-4	C-3	U201A	D-1	A-1	U520	I-4	B-3
R671	H-7	F-4	U210	G-1	B-1	U580A	C-6	F-3
R672	I-6	F-4	U211A	F-2	B-1	U580B	C-5	F-3
R673	I-6	F-4	U211B	I-1	B-1	U600	D-3	A-3
R690	C-8	G-3	U300	I-2	A-2	U620A	B-3	B-4
R710	B-5	B-4	U300A	C-2	A-2	U620B	H-2	B-4
R720	B-4	B-4	U300B	B-1	A-2	U620C	H-6	B-4
R721	D-8	B-4	U320	D-7	B-2	U670A	H-6	F-4
R722	B-3	B-4	U320A	G-1	B-2	U710	B-4	B-4

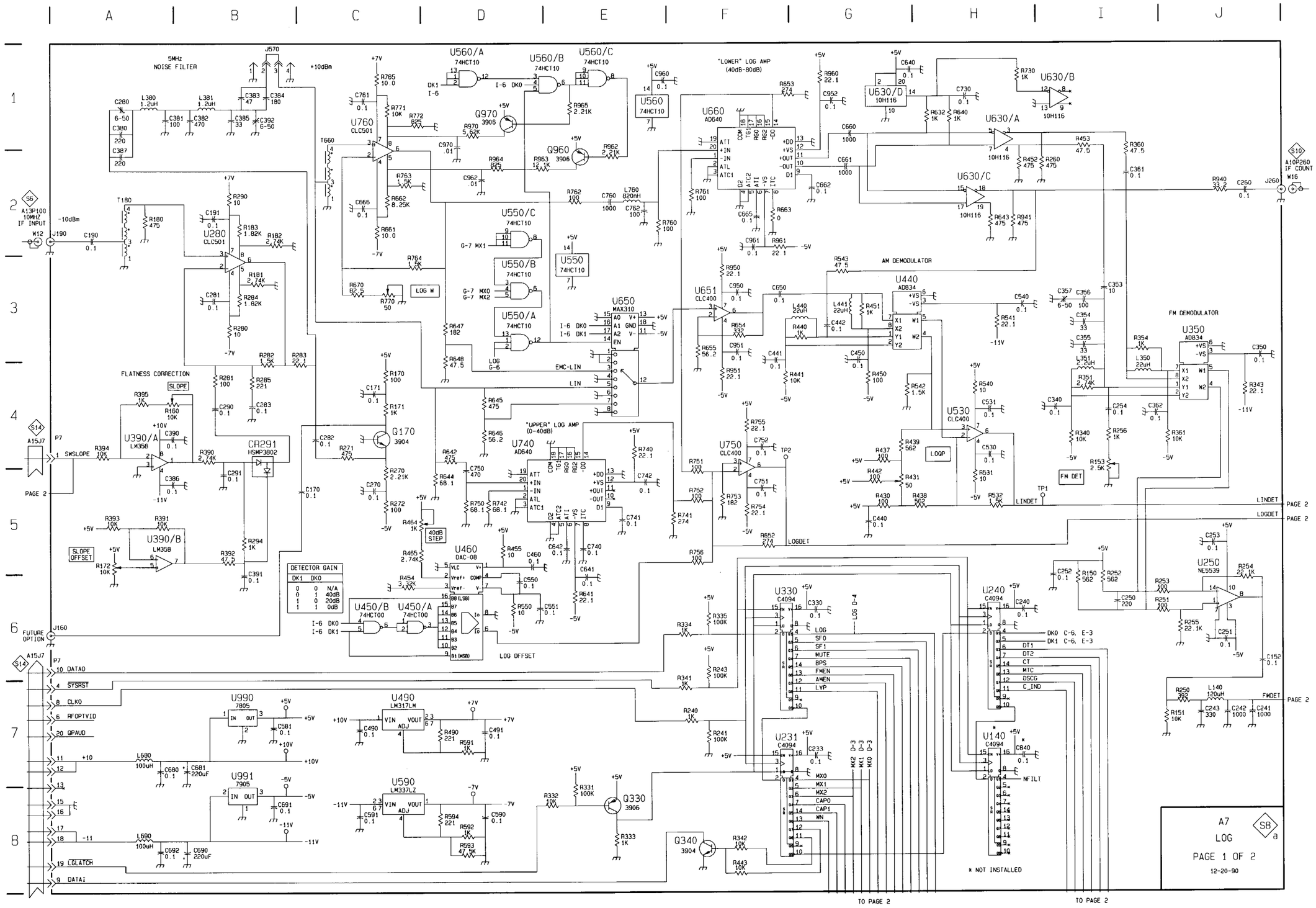
5MHz NOISE FILTER
+10dBm
-10dBm
S6 A13P100 10MHZ IF INPUT
W12
J190
C190 0.1
T180
R180 475
U280 CLC501
R290 10
C191 0.1
R183 1.82K
R182 2.74K
R181 2.74K
C281 0.1
R284 1.82K
R280 10
R282 1.5K
R283 22.1
FLATNESS CORRECTION
SLOPE
R395 1K
R160 10K
U390/A LM358
R394 10K
R390 2.74K
C390 0.1
C386 0.1
CR291 HSMP3802
C290 0.1
R281 100
R285 221
C283 0.1
C291 0.1
R294 1K
C391 0.1
S14 A15J7
P7
SWSLOPE
PAGE 2
R393 10K
R391 10K
U390/B LM358
SLOPE OFFSET
R172 10K
R392 47.5
FUTURE OPTION
J160
U760 CLC501
T660
R765 10.0
C761 0.1
R771 10K
R772 825
R763 1.5K
R662 8.25K
R661 10.0
C666 0.1
R764 1.5K
R670 825
R770 50
LOG W
R647 182
R648 47.5
LOG G-6
U560/A 74HCT10
U560/B 74HCT10
U560/C 74HCT10
DK1 I-6
I-6 DK0
Q970 3906
R970 5.62K
C970 .01
R965 2.21K
Q960 3906
R963 12.1K
R962 2.21K
R964 825
C962 .01
R762 100
C760 1000
L760 820nH
C762 100
U560 74HCT10
C960 0.1
U550/C 74HCT10
G-7 MX1
U550/B 74HCT10
G-7 MX0
G-7 MX2
U550/A 74HCT10
U550 74HCT10
U650 MAX310
A0 A1 A2 EN V+ GND V-
EMC-LIN
LIN
R645 475
R646 56.2
R642 475
R644 68.1
C750 470
R750 68.1
R742 68.1
R455 10
C460 0.1
C550 0.1
R550 10
C551 0.1
R170 100
C171 0.1
R171 1K
Q170 3904
C282 0.1
R271 470
R270 2.21K
C270 0.1
R272 100
C170 0.1
R464 1K
40dB STEP
R465 2.74K
R454 3.32K
U460 DAC-08
VLC Vref+ Vref- COMP BB(LSB) B6 B5 B4 B3 B2 B1(MSB) Io
U450/B 74HCT00
U450/A 74HCT00
I-6 DK0
I-6 DK1
LOG OFFSET
DETECTOR GAIN
DK1 DK0
0 0 N/A
0 1 40dB
1 0 20dB
1 1 0dB
"UPPER" LOG AMP (0-40dB)
U740 AD640
COM TG1 RG0 RG1 RG2 -DC
ATT +IN -IN ATL ATC1
+DO +VS +OUT -OUT D1
C2 ATC2 ATI ATI -VS ITC
R740 22.1
C742 0.1
C741 0.1
C642 0.1
C740 0.1
C641 0.1
R641 22.1
"LOWER" LOG AMP (40dB-80dB)
U660 AD640
R653 274
R960 22.1
C952 0.1
C960 0.1
C660 1000
C661 1000
C662 0.1
R761 100
C665 0.1
R663 0
C961 0.1
R961 22.1
R760 100
U630/D 10H116
C640 0.1
C730 0.1
R632 1K
R640 1K
R730 1K
U630/B 10H116
U630/A 10H116
U630/C 10H116
R453 47.5
R452 475
R260 475
R643 475
R941 475
R360 47.5
C361 0.1
R940 33.2
C260 0.1
J260
S10 A10P260 IF COUNT
W16
AM DEMODULATOR
U651 CLC400
R950 22.1
C950 0.1
R654 332
R655 56.2
C951 0.1
R951 22.1
C650 0.1
L440 22uH
R440 1K
C441 0.1
R441 10K
R543 47.5
U440 AD834
+VS -VS X1 X2 Y1 Y2 W1 W2
L441 22uH
R451 1K
C442 0.1
C450 0.1
R450 100
C540 0.1
R541 22.1
R542 1.5K
R540 10
C531 0.1
U530 CLC400
R439 562
R431 50
R437 100
R442 100
R430 100
R438 562
C440 0.1
LOGP
C530 0.1
R631 10
R532 1.5K
LINDET
TP1
FM DEMODULATOR
U350 AD834
C357 6-50
C356 100
C354 33
C355 33
L351 2.20uH
R351 2.74K
R354
L350 22uH
C350 0.1
R343 22.1
C340 0.1
R340 10K
C254 0.1
R256 1K
C362 0.1
R361 10K
R153 2.5K
FM DET
C353 10
U750 CLC400
R755 22.1
C752 0.1
C751 0.1
R754 22.1
TP2
R751 100
R752 100
R741 274
R753 182
R652 274
LOGDET
R756 100
LINDET PAGE 2
LOGDET PAGE 2
U250 NE5539
C253 0.1
R252 562
C252 0.1
R150 562
C250 220
R253 100
R251 100
R254 22.1K
R255 22.1K
C251 0.1
C152 0.1
R250 392
L140 120uH
R151 10K
C243 330
C242 1000
C241 1000
FMDET PAGE 2
U330 C4094
C330 0.1
LOG
SF0
SF1
MUTE
BPS
FMEN
AMEN
LVP
LOG D-4
U240 C4094
C240 0.1
DK0 C-6, E-3
DK1 C-6, E-3
DT1
DT2
CT
MTC
DSCG
C_IND
U231 C4094
C233 0.1
MX0
MX1
MX2
CAP0
CAP1
WN
MX2 D-3
MX1 D-3
MX0 D-3
U140 C4094
C840 0.1
NFILT
* NOT INSTALLED
R335 100K
R334 1K
R243 100K
R341 1K
R240 1K
R241 100K
U990 7805
C581 0.1
+10
L680 100uH
C680 0.1
C681 220uF
U991 7905
C691 0.1
L690 100uH
C692 0.1
C690 220uF
-11
LGLATCH
DATAI
DATAO
SYSRST
CLKO
RFOPTVID
QPAUD
U490 LM317LM
C490 0.1
R490 221
R591 1K
C491 0.1
U590 LM337LZ
C591 0.1
R594 221
R592 1K
R593 47.5K
C590 0.1
R332
R331 100K
Q330 3906
R333 1K
Q340 3904
R342 10K
R443 10K
A7 LOG
S8 a
PAGE 1 OF 2
12-20-90
TO PAGE 2
TO PAGE 2

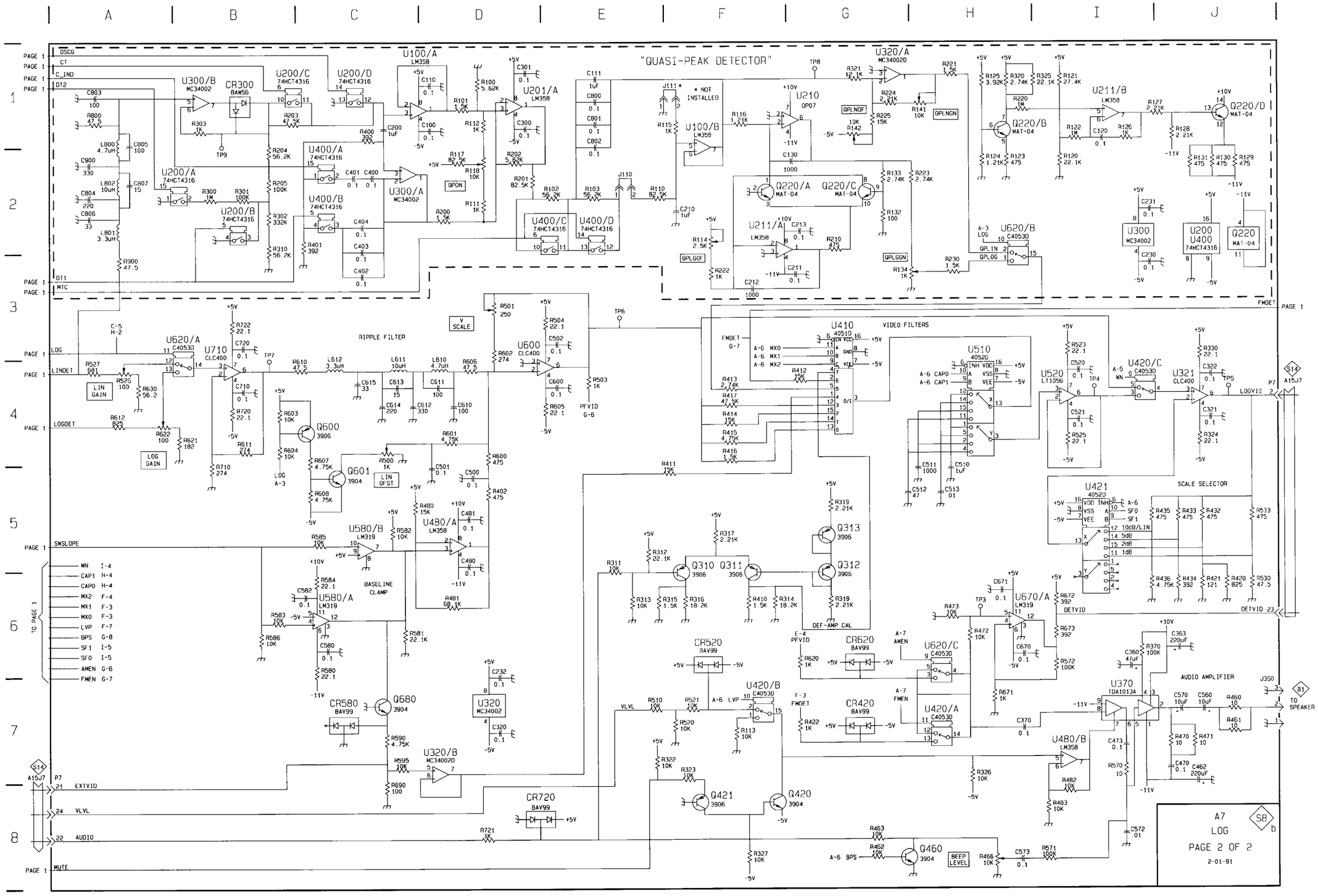
"QUASI-PEAK DETECTOR"
* NOT INSTALLED
RIPPLE FILTER
VIDEO FILTERS
SCALE SELECTOR
BASELINE CLAMP
DEF-AMP CAL
AUDIO AMPLIFIER
TO SPEAKER
A7
LOG
PAGE 2 OF 2
2-01-91

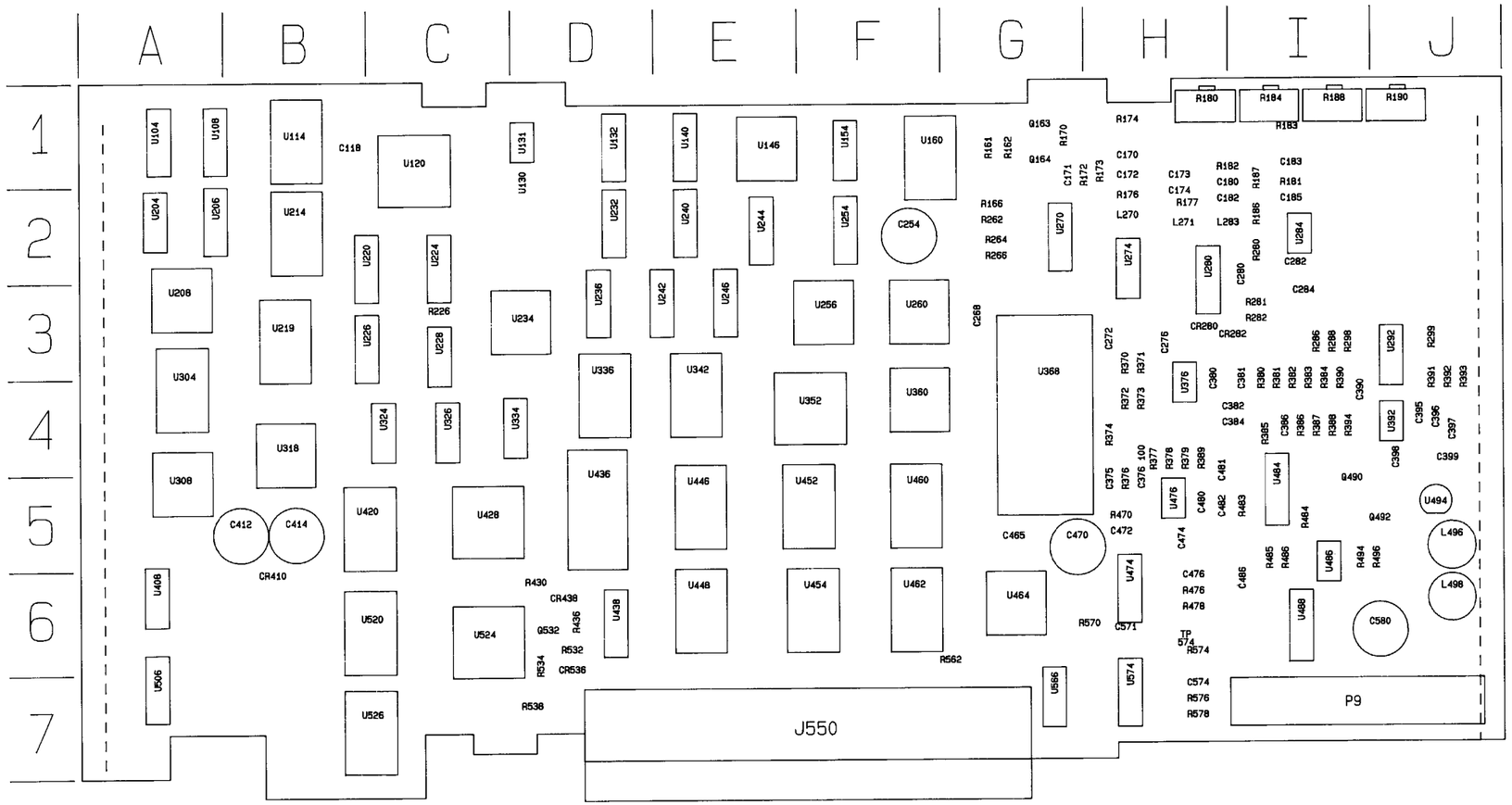

A9–Display Storage Board (Front)

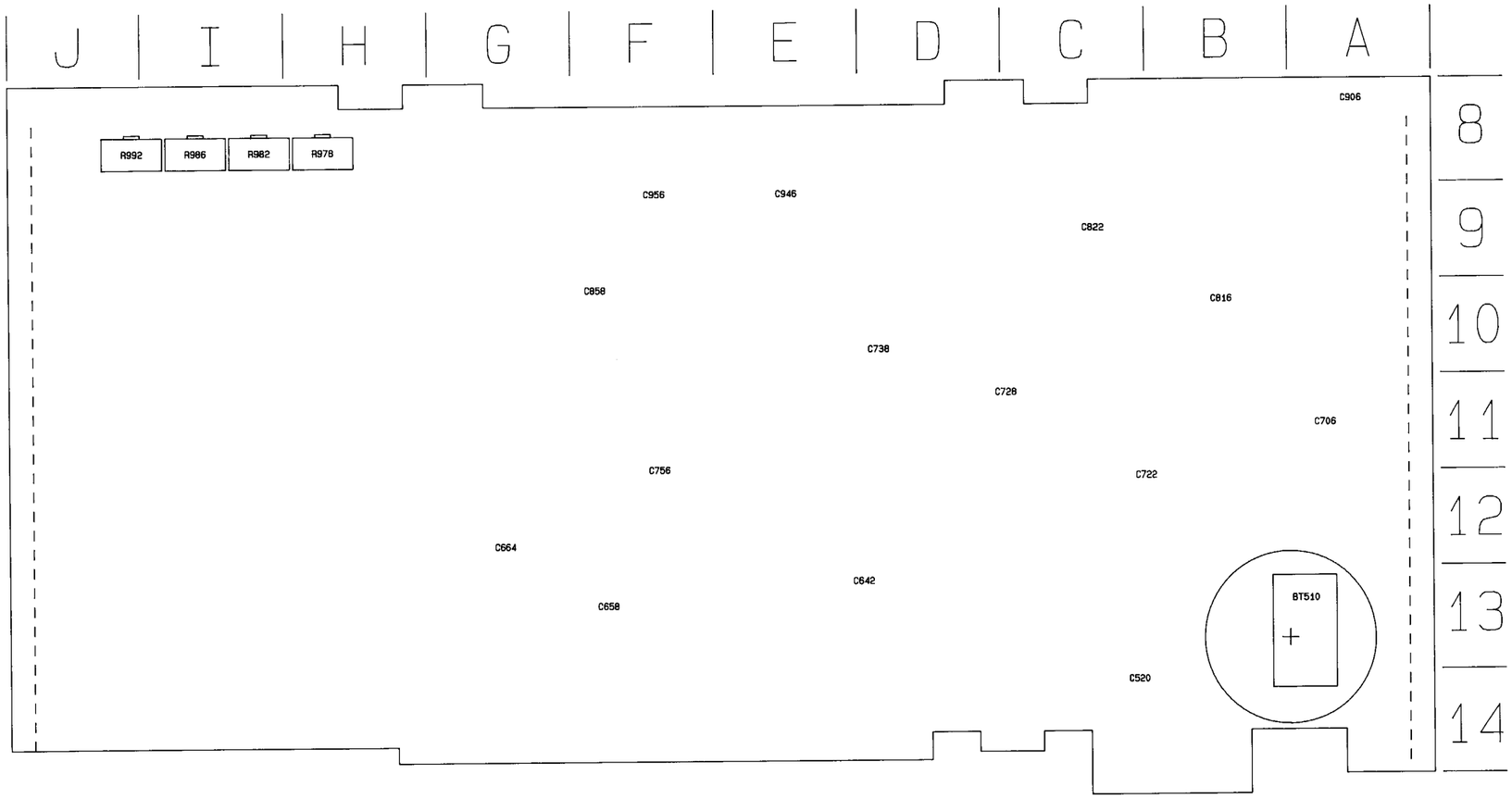

A9–Display Storage Board (Rear)

DISPLAY STORAGE

S9 a

CIRCUIT NUMBER	SCHEMATIC LOCATION	BOARD LOCATION	CIRCUIT NUMBER	SCHEMATIC LOCATION	BOARD LOCATION	CIRCUIT NUMBER	SCHEMATIC LOCATION	BOARD LOCATION
BT510	G-6	A-13	R188	J-1	I-1	U256	C-1	F-3
C118	A-8	B-1	R190	J-1	J-1	U260	E-1	F-3
C254	A-8	F-2	R286	B-4	I-3	U292A	B-4	J-3
C282	C-8	I-2	R288	B-4	I-3	U292B	B-5	J-3
C284	C-7	I-3	R298	B-4	I-3	U308	F-1	A-5
C376	I-2	H-5	R299	B-4	J-3	U324D	D-6	C-4
C382	B-7	I-4	R374	J-3	H-4	U324F	F-3	C-4
C384	B-8	I-4	R377	J-3	H-4	U326A	F-2	C-4
C390	A-4	I-4	R378	J-3	H-4	U326B	G-1	C-4
C395	A-4	J-4	R379	J-1	H-4	U334A	G-3	D-4
C396	A-5	J-4	R381	C-4	I-4	U334B	G-2	D-4
C397	B-8	J-4	R382	B-4	I-4	U336	H-3	D-3
C398	B-7	J-4	R383	B-4	I-4	U342	H-2	E-3
C399	A-7	J-4	R384	A-4	I-4	U352	G-5	F-4
C412	F-6	B-5	R385	J-3	I-4	U360	F-4	F-4
C414	A-8	B-5	R387	A-4	I-4	U392	A-5	J-4
C474	B-7	H-5	R388	A-4	I-4	U408	F-8	A-6
C476	I-1	H-6	R389	J-1	H-4	U408A	E-1	A-6
C480	J-2	H-5	R390	B-5	I-4	U408B	F-8	A-6
C481	J-1	H-4	R391	B-5	J-4	U408C	F-7	A-6
C482	J-2	H-5	R392	C-4	J-4	U420	D-2	B-5
C486	A-8	I-6	R393	B-5	J-4	U428	A-1	C-5
C520	C-8	C-14	R394	A-4	I-4	U436	F-5	D-5
C571	I-2	H-6	R430	E-5	D-6	U438	H-4	D-6
C574	B-5	H-7	R436	E-5	D-6	U446	E-7	E-5
C642	C-8	D-13	R476	I-2	H-6	U448	H-7	E-6
C658	C-7	F-13	R478	I-1	H-6	U452	E-6	F-5
C664	C-7	G-12	R483	J-3	I-5	U454	G-7	F-6
C706	B-8	A-11	R532	F-5	D-6	U460	I-4	F-5
C722	C-8	B-12	R534	F-5	D-6	U462	I-7	F-6
C728	C-8	C-11	R538	G-5	D-7	U464	D-4	G-6
C738	C-8	D-10	R562	J-7	G-6	U474	I-1	H-6
C756	C-8	F-11	R570	I-2	H-6	U476	J-2	H-5
C816	B-8	B-10	R574	B-6	H-6	U484	J-1	I-4
C822	B-8	C-9	R576	A-5	H-7	U484A	J-2	I-4
C858	C-7	F-9	R578	A-5	H-7	U484B	J-3	I-4
C906	B-8	A-8	TP574	B-6	H-6	U488	C-5	I-6
C946	C-8	E-8	U131	E-4	D-1	U494	B-7	J-5
C956	C-8	F-8	U154D	D-8	F-1	U506	F-2	A-6
CR410	G-6	B-6	U228D	I-3	C-3	U520	B-1	B-6
CR438	E-5	D-6	U234	J-6	D-3	U524	A-2	C-6
CR536	G-5	D-6	U236	D-6	D-3	U526	D-1	B-7
J550	D-8	F-7	U242	D-5	E-3	U566	C-6	G-7
L496	A-7	J-5	U244	J-7	E-2	U566A	D-5	G-7
L498	A-8	J-6	U244A	H-6	E-2	U566B	C-6	G-7
Q532	F-5	D-6	U244B	H-6	E-2	U566C	B-6	G-7
R180	A-4	H-1	U246	D-4	E-3	U574	A-5	H-7
R184	A-5	I-1						

DISPLAY STORAGE

S9 b

CIRCUIT NUMBER	SCHEMATIC LOCATION	BOARD LOCATION	CIRCUIT NUMBER	SCHEMATIC LOCATION	BOARD LOCATION	CIRCUIT NUMBER	SCHEMATIC LOCATION	BOARD LOCATION
C170	I-3	H-1	R182	J-3	H-1	U160	F-1	F-1
C171	H-4	G-1	R183	I-1	I-1	U204	H-8	A-2
C172	I-3	H-1	R186	I-2	I-2	U204A	H-6	A-2
C173	I-3	H-1	R187	I-2	I-1	U204B	I-5	A-2
C174	I-3	H-2	R226	J-6	C-3	U204C	H-7	A-2
C180	J-3	H-1	R262	G-1	G-2	U206	D-4	A-2
C182	J-3	H-2	R264	G-1	G-2	U208	G-4	A-3
C183	I-2	I-1	R266	G-1	G-2	U214	E-6	B-2
C185	J-2	I-2	R280	I-1	I-2	U219	E-7	B-3
C268	B-6	G-3	R281	H-1	I-3	U220	F-6	B-2
C272	B-5	H-3	R282	H-1	I-3	U224	H-8	C-2
C276	A-5	H-3	R370	A-4	H-3	U224A	I-7	C-2
C280	I-2	I-2	R371	A-4	H-3	U224B	I-8	C-2
C375	B-5	H-5	R372	A-5	H-4	U226	F-7	B-3
C380	A-5	H-4	R373	A-5	H-4	U228	C-1	C-3
C381	B-5	I-4	R376	B-5	H-5	U228A	J-7	C-3
C386	J-2	I-4	R380	A-4	I-4	U228B	B-2	C-3
C465	B-5	G-5	R386	J-1	I-4	U228C	B-7	C-3
C470	B-4	G-5	R470	C-4	H-5	U232	D-1	D-2
C472	B-4	H-5	R484	J-1	I-5	U240	E-1	E-2
C580	B-5	J-6	R485	A-2	I-5	U254	G-6	F-2
CR280	B-4	H-3	R486	A-1	I-5	U254	G-7	F-2
CR282	B-4	I-3	R494	A-1	I-5	U270	H-1	G-2
L270	I-3	H-2	R496	A-1	J-5	U274	A-6	H-2
L271	I-3	H-2	R978	B-4	H-8	U274A	A-6	H-2
L283	J-3	H-2	R982	A-4	I-8	U274B	B-6	H-2
P9	J-2	I-7	R986	J-1	I-8	U274C	B-6	H-2
P9	A-2	I-7	R992	I-1	J-8	U274F	H-3	H-2
Q163	H-4	G-1	U104A	I-5	A-1	U280	H-1	H-2
Q164	H-4	G-1	U104B	G-8	A-1	U284	J-2	I-2
Q490	B-2	I-5	U104C	I-6	A-1	U304	D-6	A-3
Q492	B-1	J-5	U108	D-5	A-1	U318	A-7	B-4
R161	H-4	G-1	U114	D-4	B-1	U324	I-4	C-4
R162	H-4	G-1	U120	C-1	C-1	U324A	I-6	C-4
R166	G-1	G-2	U130	J-6	D-1	U324B	I-7	C-4
R170	I-4	G-1	U132	D-3	D-1	U324E	H-1	C-4
R172	I-4	G-1	U140	E-3	E-1	U334C	J-4	C-4
R173	H-3	H-1	U146	H-6	E-1	U368	C-5	G-3
R174	I-3	H-1	U154	F-3	F-1	U376	A-5	H-4
R176	I-3	H-2	U154A	G-3	F-1	U484C	J-1	I-4
R177	I-3	H-2	U154B	G-3	F-1	U484D	J-3	I-4
R181	I-1	I-1	U154C	G-2	F-1	U486A	A-2	I-5
						U486B	A-1	I-5

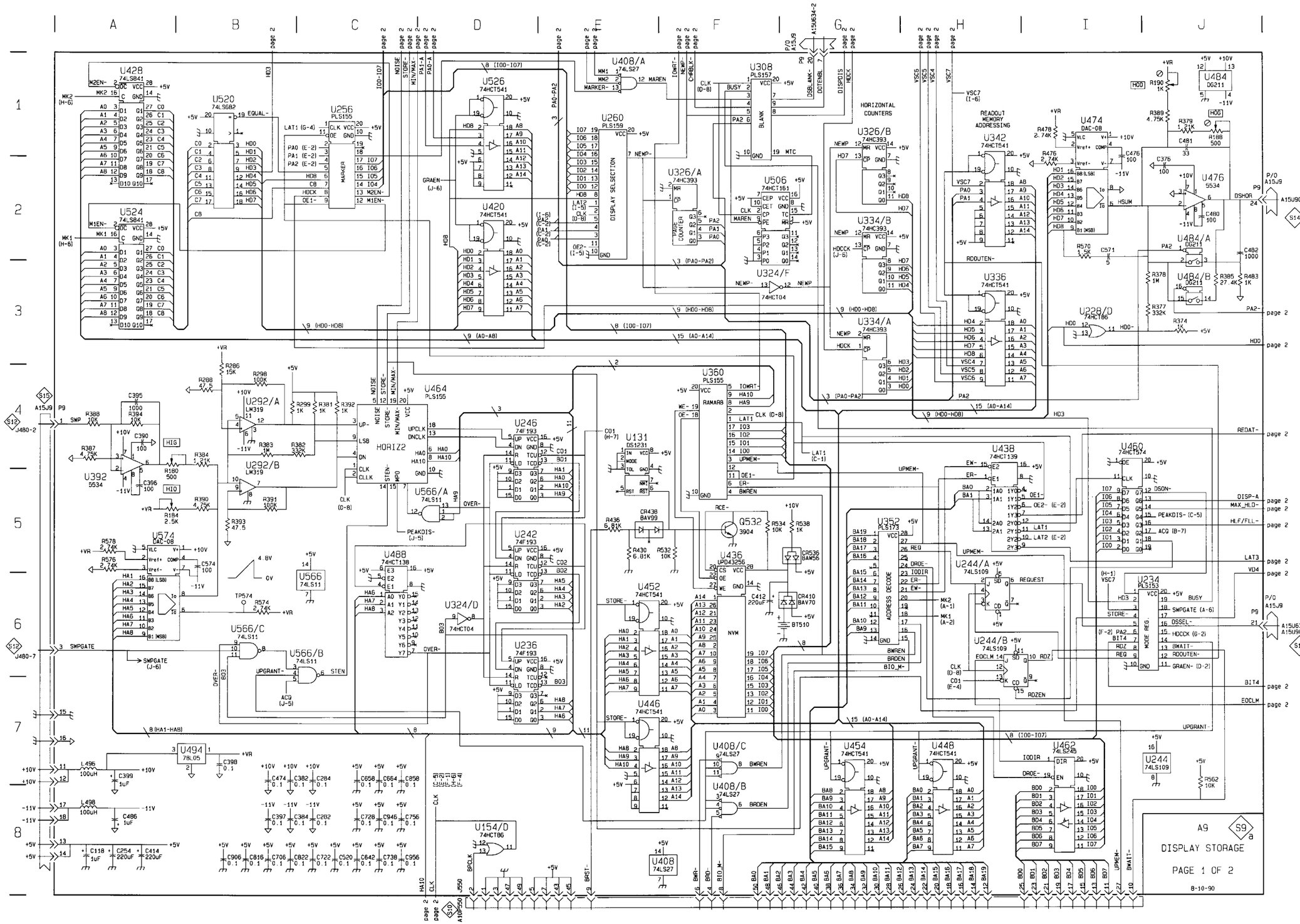
A9
DISPLAY STORAGE
PAGE 1 OF 2
8-10-90
U428
U524
U520
U256
U526
U420
U408/A
U308
U260
U326/A
U506
U324/F
U326/B
U334/B
U334/A
U342
U336
U474
U484
U476
U484/A
U484/B
U228/D
U292/A
U292/B
U392
U464
U360
U246
U242
U236
U131
U566/A
U488
U324/D
U566/C
U566/B
U574
U494
U452
U446
U436
U352
U438
U460
U234
U244/A
U244/B
U454
U448
U462
U244
U408/C
U408/B
U408
U154/D
U566
HORIZONTAL COUNTERS
READOUT MEMORY ADDRESSING
DISPLAY SELECTION
ADDRESS DECODE
MODE REG
NVM
HORIZ2

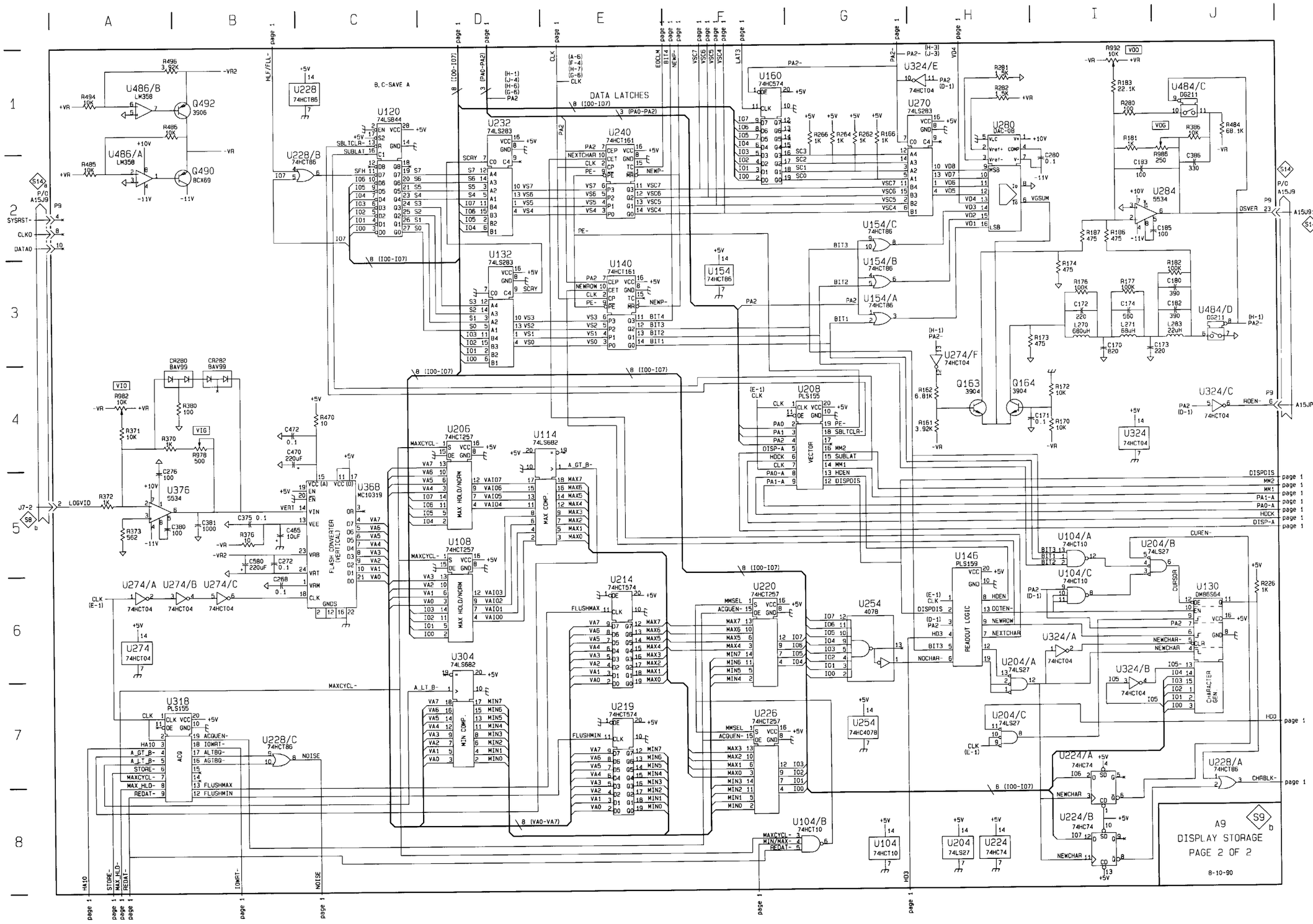
A9
DISPLAY STORAGE
PAGE 2 OF 2
8-10-90
DATA LATCHES
B, C-SAVE A
U120 74LS844
U232 74LS283
U132 74LS283
U240 74HCT161
U140 74HCT161
U160 74HC574
U270 74LS283
U280 DAC-08
U284 5534
U484/C DG211
U484/D DG211
U324/E 74HCT04
U324/C 74HCT04
U324 74HCT04
U154/C 74HCT86
U154/B 74HCT86
U154/A 74HCT86
U154 74HCT86
U274/F 74HCT04
Q163 3904
Q164 3904
U208 PLS155
VECTOR
U206 74HCT257
U114 74LS682
MAX HOLD/NORM
MAX COMP.
U368 MC10319
FLASH CONVERTER (VERTICAL)
U376 5534
U274/A U274/B U274/C 74HCT04
U274 74HCT04
U318 PLS155
ACQ
U228/C 74HCT86
U304 74LS682
MIN COMP.
U214 74HCT574
U219 74HCT574
U220 74HCT257
U226 74HCT257
U254 4078
U254 74HC4078
U146 PLS159
READOUT LOGIC
U104/A 74HCT10
U104/C 74HCT10
U204/B 74LS27
U130 DM86S64
CHARACTER GEN.
U324/A 74HCT04
U324/B 74HCT04
U204/A 74LS27
U204/C 74LS27
U224/A 74HC74
U224/B 74HC74
U228/A 74HCT86
U104/B 74HCT10
U104 74HCT10
U204 74LS27
U224 74HC74
U228/B 74HCT86
U228 74HCT86
U486/B LM358
U486/A LM358
Q492 3906
Q490 BCX69
CR280 BAV99
CR282 BAV99
VIO
VIG
VOO
VOG
LOGVIO
SYSRST-
CLKO
DATAO
DISPDIS
MM2
MM1
PA1-A
PA0-A
HDCK
DISP-A
CURSOR
CURSOR
HD0
CHRBLK-
NOISE
HA10
STORE-
MAX_HLD-
REDAT-
IOWRT-
NEWCHAR
NEWCHAR-
NEWROW
NEXTCHAR
NOCHAR-
DSVER
ROEN-
A15JPB40-3
A15U911-2
A15J9
P/O
S9
S14
S8
J7-2
page 1

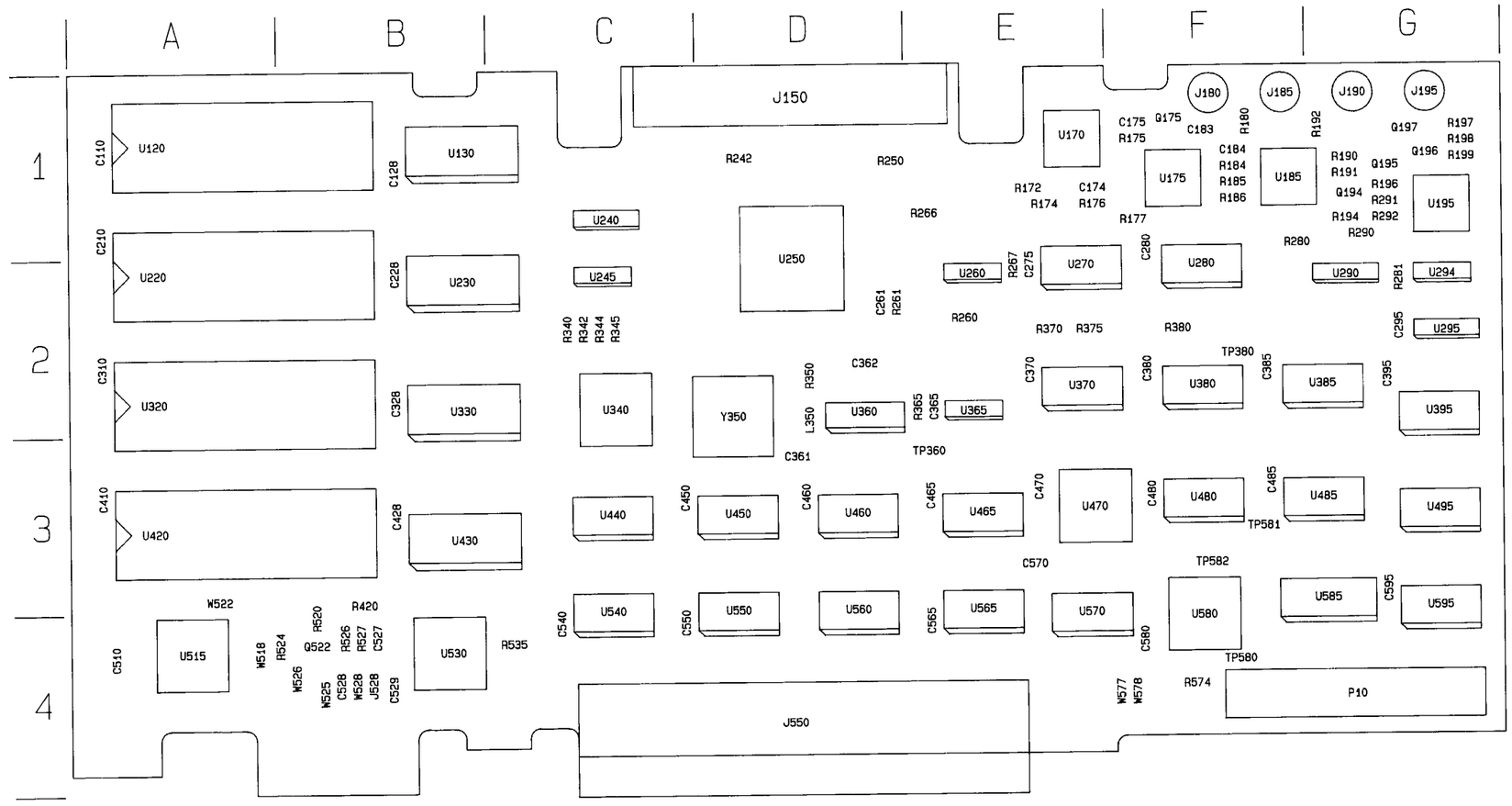

A10–Microprocessor Board (Front)

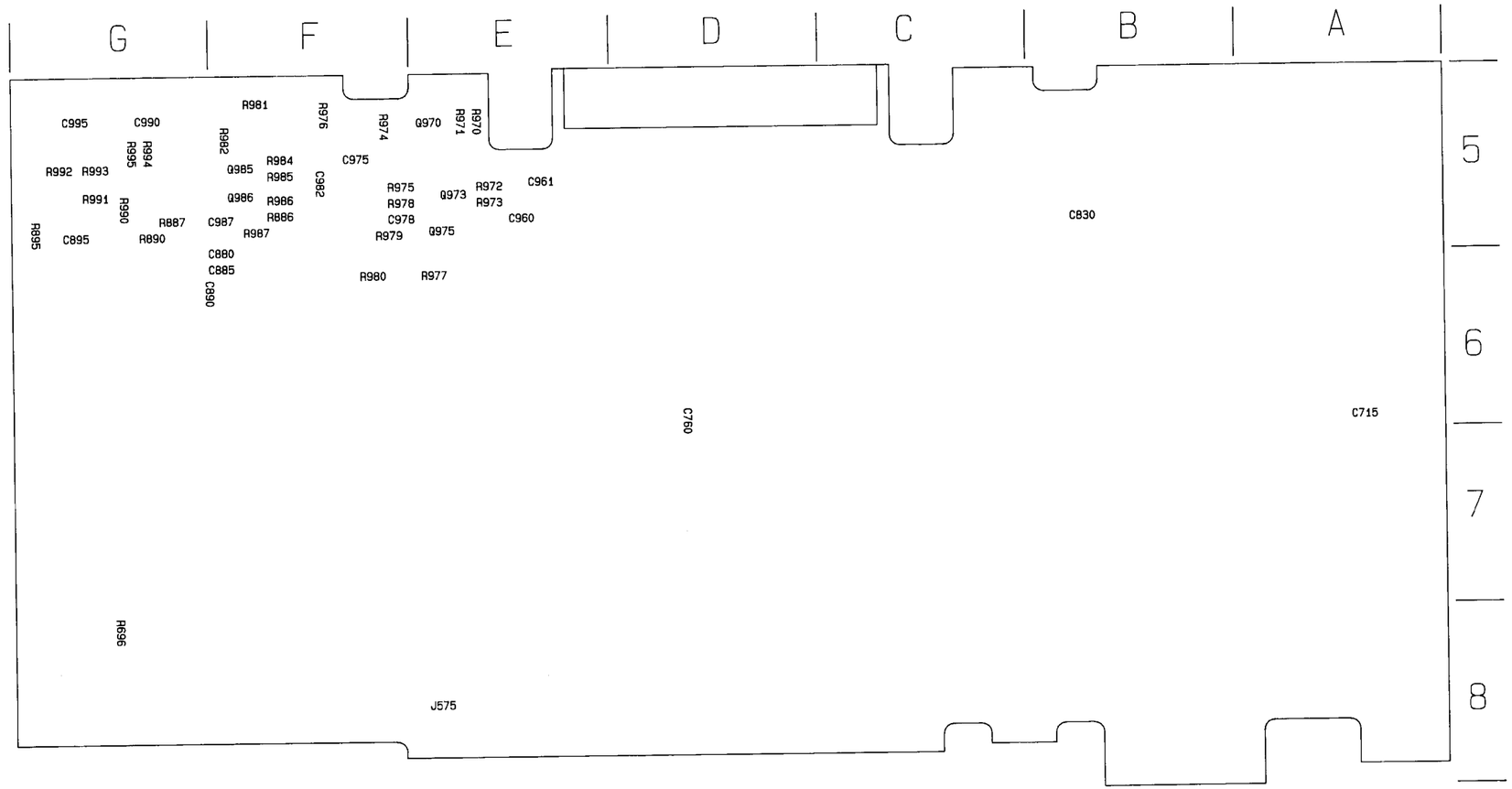

A10–Microprocessor Board (Rear)

MICROPROCESSOR

S10 a

CIRCUIT NUMBER	SCHEMMATIC LOCATION	BOARD LOCATION	CIRCUIT NUMBER	SCHEMMATIC LOCATION	BOARD LOCATION	CIRCUIT NUMBER	SCHEMMATIC LOCATION	BOARD LOCATION
C110	J-2	A-1	P10	A-4	G-4	U260	C-6	E-2
C128	H-7	B-1	P10	A-3	G-4	U260A	C-5	E-2
C210	I-2	A-1	P10	A-5	G-4	U260B	C-6	E-2
C228	H-7	B-2	Q522	G-7	B-4	U270A	A-3	E-2
C261	B-3	D-2	R242	B-2	D-1	U270B	A-7	E-2
C275	I-7	E-2	R250	C-2	D-1	U270D	E-5	E-2
C280	I-7	F-2	R260	A-6	E-2	U270E	A-4	E-2
C295	I-7	G-2	R261	B-3	D-2	U270H	C-1	E-2
C310	J-2	A-2	R266	B-2	E-1	U270I	A-7	E-2
C328	I-7	B-2	R267	C-1	E-2	U280A	C-2	F-2
C361	B-4	D-3	R340	C-8	C-2	U280B	A-6	F-2
C362	B-5	D-2	R342	C-8	C-2	U280C	A-4	F-2
C365	I-7	E-2	R344	C-8	C-2	U280D	A-2	F-2
C370	I-7	E-2	R345	B-1	C-2	U320	I-5	A-2
C380	I-7	F-2	R350	B-5	D-2	U330	G-5	B-2
C385	J-7	F-2	R365	A-4	E-2	U340	B-2	C-2
C395	I-7	G-2	R370	A-3	E-2	U360	B-4	D-2
C410	J-2	A-3	R375	E-7	E-2	U420	I-3	A-3
C428	I-7	B-3	R380	B-6	F-2	U430	G-3	B-3
C450	J-7	C-3	R420	F-7	B-3	U440	D-4	C-3
C460	D-5	D-3	R520	G-7	B-4	U450	D-3	D-3
C465	J-7	E-3	R524	H-7	B-4	U460	D-5	D-3
C470	J-7	E-3	R526	F-8	B-4	U465	D-1	E-3
C480	J-7	F-3	R527	F-7	B-4	U485G	E-2	G-3
C510	J-7	A-4	R535	B-6	C-4	U485H	E-2	G-3
C527	F-7	B-4	R574	A-4	F-4	U515	F-1	A-4
C528	J-2	B-4	R980	A-4	F-6	U530B	E-6	B-4
C540	J-7	C-4	TP360	A-5	E-3	U530C	B-6	B-4
C550	J-7	C-4	U120	J-5	A-1	U540	E-4	C-4
C565	J-7	E-4	U130	H-5	B-1	U550	E-3	D-4
C715	I-8	A-6	U220	J-3	A-2	U560	E-5	D-4
C760	I-7	D-6	U230	H-3	B-2	U565	D-6	E-4
C830	I-8	B-5	U240	A-7	C-1	W518	H-2	A-4
C890	J-7	G-6	U245A	A-1	C-2	W522	I-2	A-3
J150	A-1	D-1	U245B	A-1	C-2	W525	I-2	B-4
J528	H-2	B-4	U245C	A-2	C-2	W526	E-2	B-4
J550	A-8	D-4	U245D	B-2	C-2	W528	H-2	B-4
J575	A-5	E-8	U250	C-2	D-2	Y350	B-5	D-2
L350	B-4	D-2						

MICROPROCESSOR

S10 b

CIRCUIT NUMBER	SCHEMATIC LOCATION	BOARD LOCATION	CIRCUIT NUMBER	SCHEMATIC LOCATION	BOARD LOCATION	CIRCUIT NUMBER	SCHEMATIC LOCATION	BOARD LOCATION
C174	A-4	E-1	R196	H-7	G-1	U185B	B-8	F-1
C175	E-8	F-1	R197	A-8	G-1	U185C	F-6	F-1
C183	F-7	F-1	R198	A-8	G-1	U185D	A-8	F-1
C184	A-8	F-1	R199	B-8	G-1	U195A	G-7	G-1
C485	E-2	F-3	R280	C-8	F-1	U195B	G-6	G-1
C529	B-2	B-4	R281	J-1	G-2	U195C	G-8	G-1
C570	B-3	E-3	R290	H-8	G-1	U270C	D-3	E-2
C580	C-3	F-4	R291	H-6	G-1	U270F	F-5	E-2
C595	D-5	G-3	R292	H-8	G-1	U270G	J-6	E-2
C880	A-8	F-5	R696	E-2	G-8	U280E	J-2	F-2
C885	D-8	F-6	R886	D-7	F-5	U280F	J-2	F-2
C895	G-8	G-5	R887	C-8	G-5	U280G	J-2	F-2
C960	B-5	E-5	R890	C-7	G-5	U280H	J-1	F-2
C961	B-5	E-5	R895	H-7	G-5	U280I	J-1	F-2
C975	F-8	F-5	R970	B-5	E-5	U290	J-5	G-2
C978	A-6	F-5	R971	A-5	E-5	U294	J-7	G-2
C982	F-7	F-5	R972	C-5	E-5	U294A	I-7	G-2
C987	C-8	F-5	R973	C-6	E-5	U294B	H-4	G-2
C990	A-7	G-5	R974	A-6	F-5	U294C	H-4	G-2
C995	A-7	G-5	R975	B-7	F-5	U294D	E-7	G-2
J180	A-5	F-1	R976	A-4	F-5	U294E	E-7	G-2
J185	A-6	F-1	R977	C-6	E-6	U294F	I-7	G-2
J190	A-7	G-1	R978	B-6	F-5	U295	J-3	G-2
J195	A-7	G-1	R979	A-6	F-5	U365	H-3	E-2
P10	A-6	G-4	R981	B-6	F-5	U365A	H-1	E-2
P10	D-1	G-4	R982	D-6	F-5	U365B	H-1	E-2
Q175	F-8	F-1	R984	D-6	F-5	U365C	H-2	E-2
Q194	H-7	G-1	R985	E-7	F-5	U365D	I-6	E-2
Q195	H-7	G-1	R986	E-7	F-5	U370	I-1	E-2
Q196	B-8	G-1	R987	F-6	F-5	U380	I-3	F-2
Q197	B-7	G-1	R990	H-7	G-5	U385	G-5	G-2
Q970	B-5	E-5	R991	H-6	G-5	U395	I-5	G-2
Q973	B-6	E-5	R992	F-6	G-5	U470	G-1	E-3
Q975	B-6	E-5	R993	F-7	G-5	U480	G-3	F-3
Q985	E-6	F-5	R994	B-7	G-5	U485A	E-3	G-3
Q986	E-7	F-5	R995	A-7	G-5	U485B	E-2	G-3
R172	B-5	E-1	TP380	I-2	F-2	U485C	E-2	G-3
R174	D-6	E-1	TP580	C-3	F-4	U485D	E-1	G-3
R175	F-8	F-1	TP581	C-3	F-3	U485E	D-1	G-3
R176	D-6	E-1	TP582	C-3	F-3	U485F	D-2	G-3
R177	D-6	F-1	U170A	B-6	E-1	U485I	E-2	G-3
R180	B-7	F-1	U170B	B-6	E-1	U495	D-3	G-3
R184	D-7	F-1	U170C	B-5	E-1	U530A	A-1	B-4
R185	D-7	F-1	U170D	A-4	E-1	U570	A-3	E-4
R186	D-7	F-1	U175A	D-7	F-1	U580	B-3	F-4
R190	B-8	G-1	U175B	B-7	F-1	U585	C-1	G-4
R191	C-8	G-1	U175C	D-6	F-1	U595	D-5	G-4
R192	B-7	G-1	U175D	F-7	F-1	W577	F-5	F-4
R194	H-7	G-1	U185A	C-8	F-1	W578	F-5	F-4

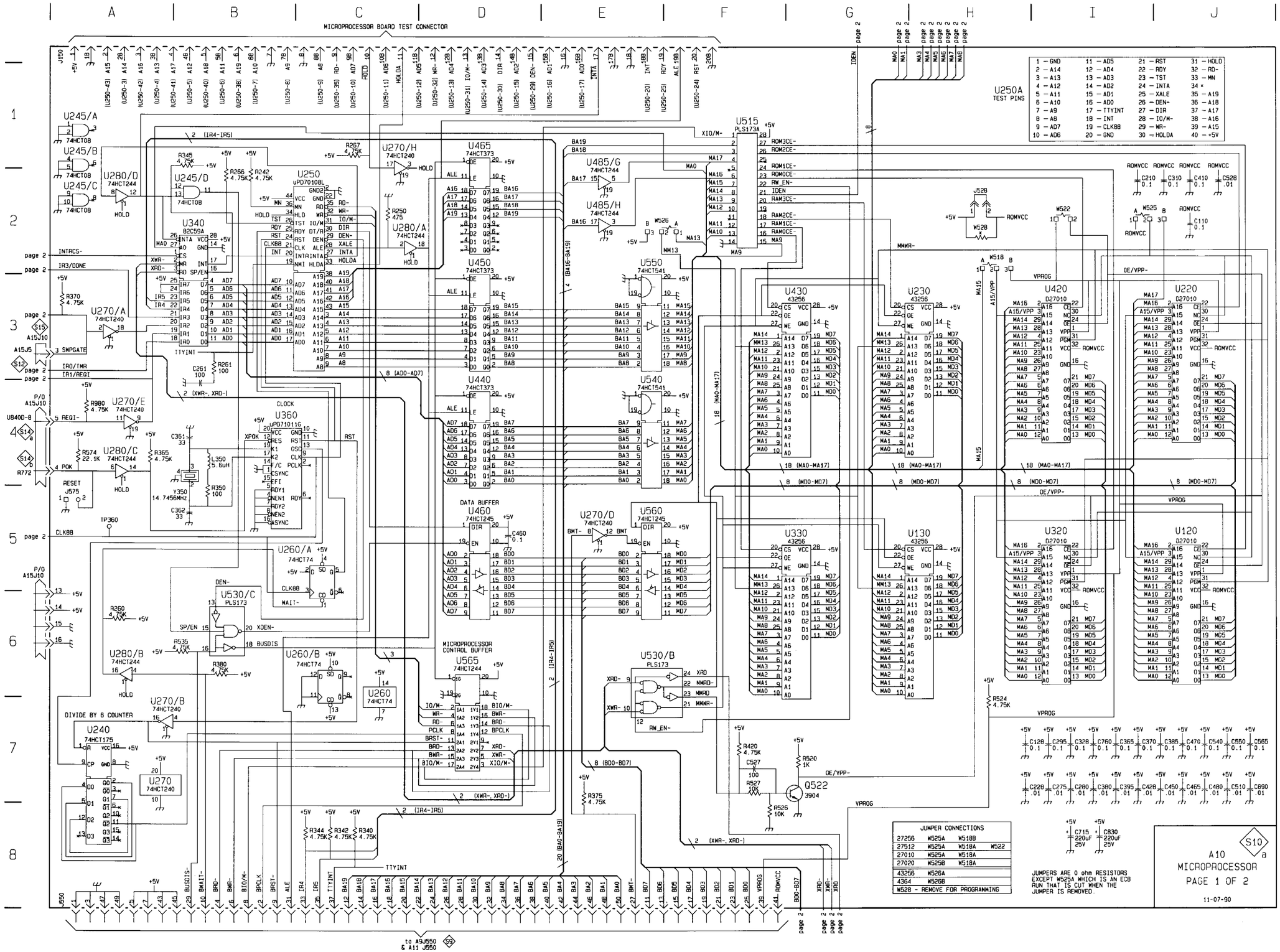
MICROPROCESSOR BOARD TEST CONNECTOR
U250A
TEST PINS
1 – GND
2 – A14
3 – A13
4 – A12
5 – A11
6 – A10
7 – A9
8 – A8
9 – AD7
10 – AD6
11 – AD5
12 – AD4
13 – AD3
14 – AD2
15 – AD1
16 – AD0
17 – TTYINT
18 – INT
19 – CLK88
20 – GND
21 – RST
22 – RDY
23 – TST
24 – INTA
25 – XALE
26 – DEN-
27 – DIR
28 – IO/M-
29 – WR-
30 – HOLDA
31 – HOLD
32 – RD-
33 – MN
34 ×
35 – A19
36 – A18
37 – A17
38 – A16
39 – A15
40 – +5V
U515
PLS173A
U250
uPD70108L
U340
82C59A
U360
uPD71011G
U465
74HCT373
U450
74HCT373
U440
74HCT373
U460
74HCT245
U560
74HCT245
U550
74HCT541
U540
74HCT541
U430
43256
U230
43256
U330
43256
U130
43256
U420
D27010
U220
D27010
U320
D27010
U120
D27010
U530/C
PLS173
U530/B
PLS173
U565
74HCT244
U260
74HCT74
U260/A
74HCT74
U260/B
74HCT74
U240
74HCT175
U270
74HCT240
U270/A
74HCT240
U270/B
74HCT240
U270/C
74HCT240
U270/D
74HCT240
U270/E
74HCT240
U280/A
74HCT244
U280/B
74HCT244
U280/C
74HCT244
U280/D
74HCT244
U245/A
74HCT08
U245/B
74HCT08
U245/C
74HCT08
U245/D
74HCT08
U270/H
74HCT240
U485/G
74HCT244
U485/H
74HCT244
DATA BUFFER
MICROPROCESSOR CONTROL BUFFER
DIVIDE BY 6 COUNTER
CLOCK
RESET
Y350
14.7456MHz
Q522
3904
JUMPER CONNECTIONS
27256 W525A W518B
27512 W525A W518A W522
27010 W525A W518A
27020 W525B W518A
43256 W526A
4364 W526B
W528 - REMOVE FOR PROGRAMMING
JUMPERS ARE 0 ohm RESISTORS EXCEPT W525A WHICH IS AN ECB RUN THAT IS CUT WHEN THE JUMPER IS REMOVED.
S10
A10
MICROPROCESSOR
PAGE 1 OF 2
11-07-90
to A9J550 & A11 J550

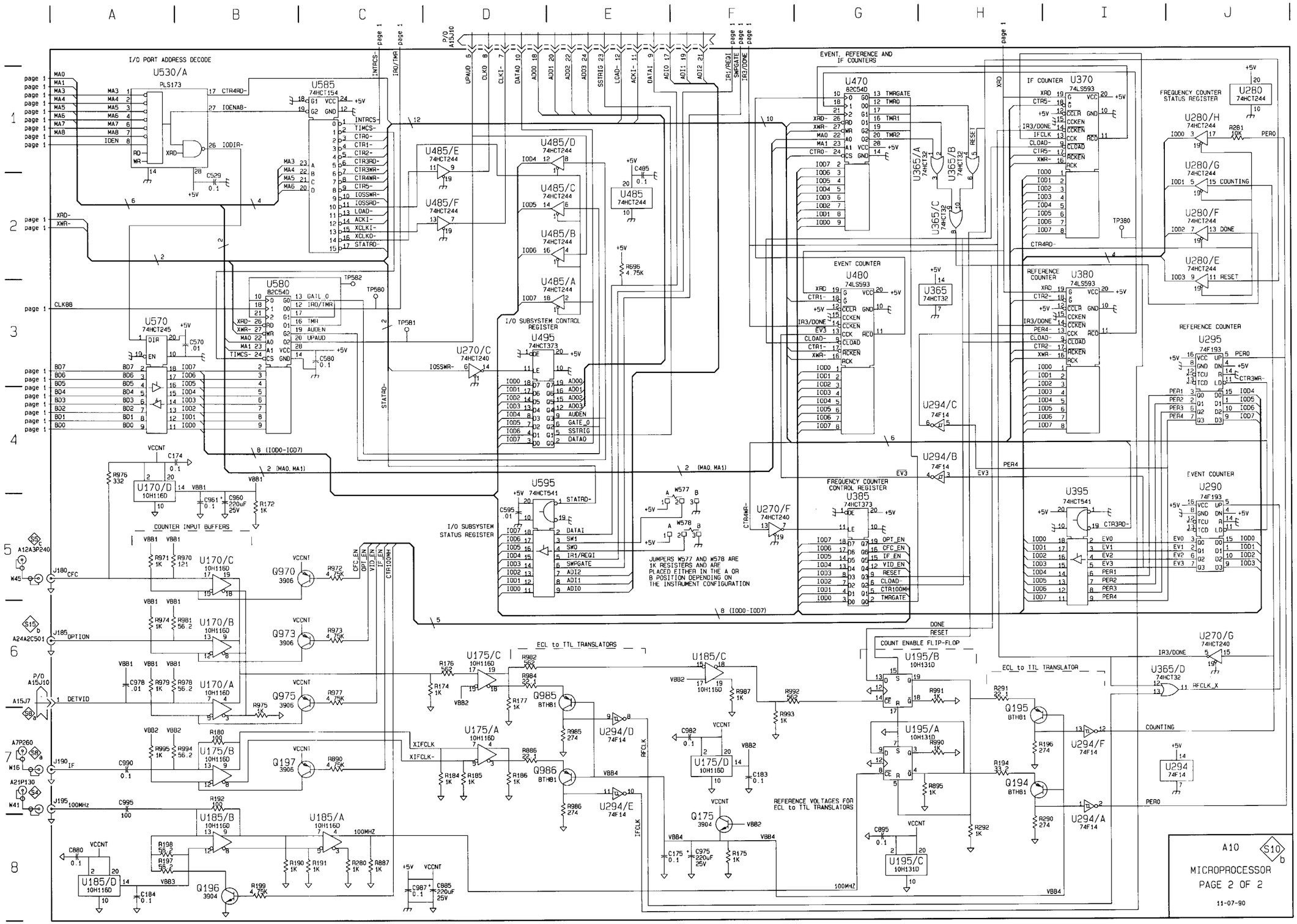
I/O PORT ADDRESS DECODE
U530/A
PLS173
U585
74HCT154
U485/E
74HCT244
U485/F
74HCT244
U485/D
74HCT244
U485/C
74HCT244
U485/B
74HCT244
U485/A
74HCT244
U485
74HCT244
U580
82C54D
U570
74HCT245
U270/C
74HCT240
U495
74HCT373
I/O SUBSYSTEM CONTROL REGISTER
U595
74HCT541
I/O SUBSYSTEM STATUS REGISTER
JUMPERS W577 AND W578 ARE 1K RESISTERS AND ARE PLACED EITHER IN THE A OR B POSITION DEPENDING ON THE INSTRUMENT CONFIGURATION
EVENT, REFERENCE AND IF COUNTERS
U470
82C54D
U365/A
74HCT32
U365/B
74HCT32
U365/C
74HCT32
U365
74HCT32
IF COUNTER U370
74LS593
FREQUENCY COUNTER STATUS REGISTER
U280
74HCT244
U280/H
74HCT244
U280/G
74HCT244
U280/F
74HCT244
U280/E
74HCT244
EVENT COUNTER
U480
74LS593
REFERENCE COUNTER U380
74LS593
U294/C
74F14
U294/B
74F14
REFERENCE COUNTER
U295
74F193
FREQUENCY COUNTER CONTROL REGISTER
U385
74HCT373
U270/F
74HCT240
U395
74HCT541
EVENT COUNTER
U290
74F193
COUNTER INPUT BUFFERS
U170/D
10H116D
U170/C
10H116D
U170/B
10H116D
U170/A
10H116D
U175/C
10H116D
U175/A
10H116D
U175/B
10H116D
U185/C
10H116D
U185/B
10H116D
U185/A
10H116D
U185/D
10H116D
ECL to TTL TRANSLATORS
U195/B
10H131D
U195/A
10H131D
U195/C
10H131D
COUNT ENABLE FLIP-FLOP
ECL to TTL TRANSLATOR
U175/D
10H116D
REFERENCE VOLTAGES FOR ECL to TTL TRANSLATORS
U270/G
74HCT240
U365/D
74HCT32
U294/D
74F14
U294/E
74F14
U294/F
74F14
U294
74F14
U294/A
74F14
Q985
BTHB1
Q986
BTHB1
Q195
BTHB1
Q194
BTHB1
Q970
3906
Q973
3906
Q975
3906
Q197
3906
Q196
3904
Q175
3904
A10
MICROPROCESSOR
PAGE 2 OF 2
11-07-90

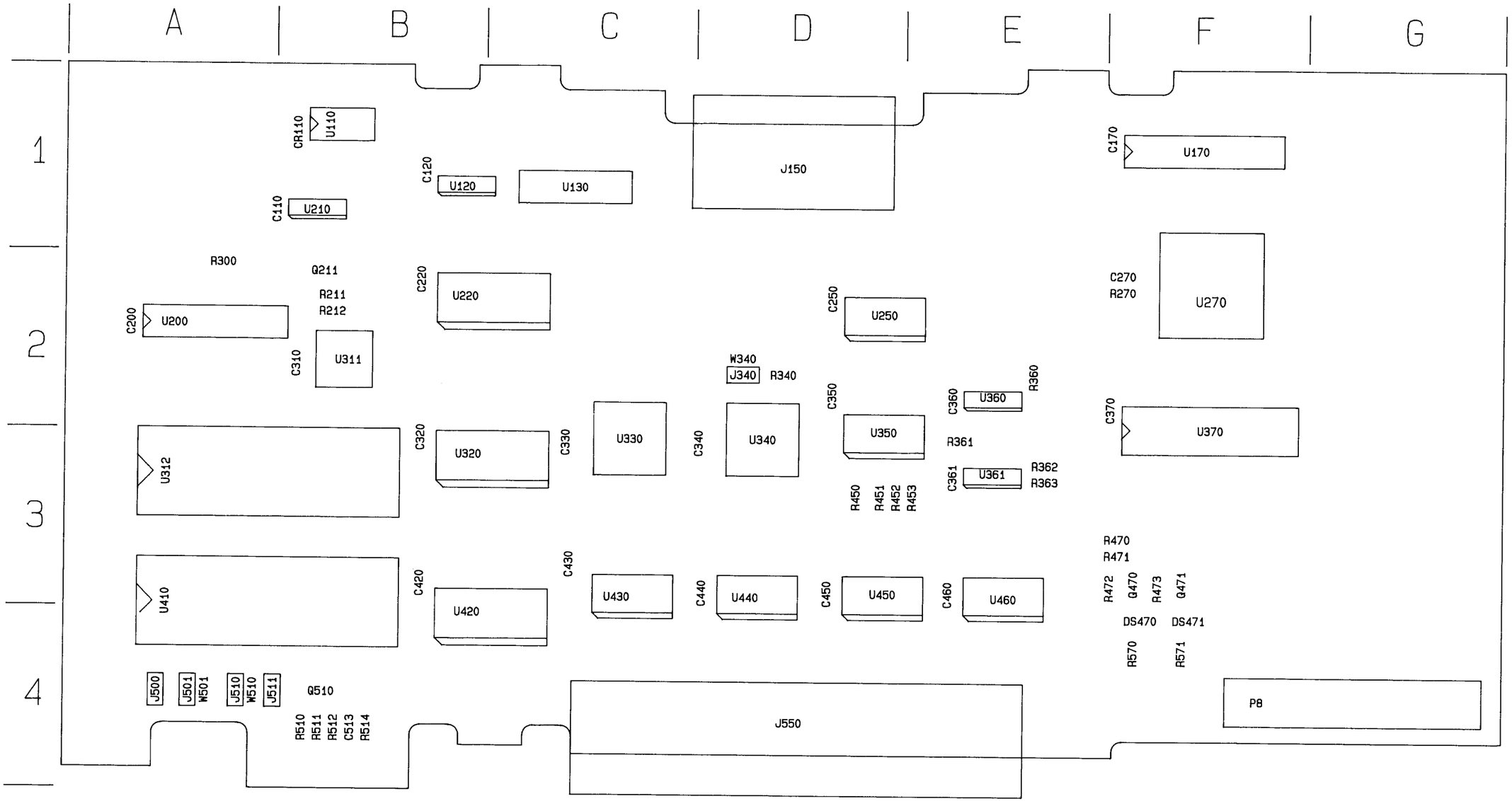

A25–GPIB Board

GPIB

S11 a

CIRCUIT NUMBER	SCHEMATIC LOCATION	BOARD LOCATION
BT600	E-5	A-5
C110	F-8	B-1
C120	E-4	B-1
C170	J-2	F-1
C200	E-7	A-2
C220	G-4	B-2
C250	D-4	D-2
C270	I-1	F-2
C310	E-7	B-2
C320	H-4	B-3
C330	C-5	C-3
C340	C-4	D-3
C350	C-8	D-2
C360	A-6	E-2
C361	B-2	E-3
C370	J-1	F-2
C420	I-4	B-3
C430	B-1	C-3
C440	B-2	D-3
C450	B-5	D-3
C460	B-3	E-3
C513	C-1	B-4
C710	A-8	B-5
C860	A-8	E-7
C920	A-8	B-8
C990	A-8	G-8
CR110	E-5	B-1
DS470	F-2	F-4
DS471	F-1	F-4
J150	J-1	D-1
J340	B-2	D-2
J500	B-2	A-4
J501	C-2	A-4
J510	C-2	A-4
J511	C-1	A-4
J550	A-1	D-4
P8	A-8	F-4
Q211	E-8	B-2
Q470	F-3	F-3
Q471	F-2	F-3
Q510	C-1	B-4
R211	E-8	B-2
R212	E-8	B-2
R270	G-1	F-2
R300	D-5	A-2
R340	B-2	D-2
R360	A-8	E-2
R361	G-1	E-3
R362	G-2	E-3
R363	G-1	E-3
R450	B-8	D-3
R451	B-8	D-3
R452	A-8	D-3
R453	B-8	E-3

R470 CIRCUIT NUMBER	F-2 SCHEMATIC LOCATION	F-3 BOARD LOCATION
R471	F-3	F-3
R472	F-3	F-3
R473	F-2	F-3
R510	C-1	B-4
R511	C-1	B-4
R512	C-1	B-4
R514	C-1	B-4
R570	F-2	F-4
R571	F-1	F-4
U110	E-5	B-1
U130	E-4	C-1
U130A	D-6	C-1
U130B	F-4	C-1
U130C	G-4	C-1
U130D	I-4	C-1
U170	I-2	F-1
U200	D-6	A-2
U210	F-8	B-1
U210A	F-6	B-1
U210B	F-6	B-1
U210C	F-6	B-1
U210D	F-7	B-1
U210E	F-7	B-1
U210F	F-7	B-1
U220	G-4	B-2
U250	D-4	D-2
U270	H-1	F-2
U311	D-7	B-2
U312	E-1	A-3
U320	H-4	B-3
U330	C-5	C-3
U340	C-4	D-3
U350	C-7	D-3
U360	A-7	E-2
U360A	A-6	E-2
U360B	A-6	E-2
U360C	B-7	E-2
U360D	C-7	E-2
U361	B-2	E-3
U361A	B-1	E-3
U361B	G-3	E-3
U361C	G-1	E-3
U361D	A-6	E-3
U361E	A-6	E-3
U361F	H-1	E-3
U370	I-1	F-2
U410	D-1	A-4
U420	I-4	B-4
U430	A-1	C-3
U440	A-2	D-3
U450	A-4	D-3
U460	A-3	E-3
W340	B-3	D-2
W501	C-3	A-4
W510	C-2	A-4

RS-232

S11 b

CIRCUIT NUMBER	SCHEMATIC LOCATION	BOARD LOCATION	CIRCUIT NUMBER	SCHEMATIC LOCATION	BOARD LOCATION
BT600	E-5	A-5	R480	H-6	F-3
C110	F-8	B-2	R510	C-1	B-4
C120	E-4	B-1	R511	C-1	B-4
C200	E-7	A-2	R512	C-1	B-4
C220	G-4	B-2	R514	C-1	B-4
C250	D-4	D-2	TP2	E-5	A-1
C290	I-6	G-2	U110	E-5	B-1
C310	E-7	B-2	U130	E-4	C-1
C320	H-4	B-3	U130A	D-6	C-1
C330	C-5	C-3	U130B	F-4	C-1
C340	C-4	D-3	U130C	G-4	C-1
C350	C-8	D-2	U130D	I-4	C-1
C360	A-6	E-2	U200	D-6	A-2
C361	B-2	E-3	U210	F-8	B-1
C420	I-4	B-3	U210A	F-7	B-1
C430	B-1	C-3	U210B	F-7	B-1
C440	B-2	D-3	U210C	F-7	B-1
C450	B-5	D-3	U210D	F-7	B-1
C460	B-3	E-3	U210E	F-7	B-1
C480	G-6	F-3	U210F	F-7	B-1
C513	C-1	B-4	U220	G-4	B-2
C710	A-8	B-5	U250	D-4	D-2
C860	A-8	E-7	U280	I-6	F-1
C920	A-8	B-8	U311	D-7	B-2
C990	A-8	G-8	U312	E-1	A-3
CR110	F-5	B-1	U320	H-4	B-3
J140	J-5	D-1	U330	C-5	C-3
J150	J-6	D-1	U340	C-3	D-3
J340	B-2	D-2	U350	C-7	D-2
J500	B-2	A-4	U360	A-7	E-2
J501	C-3	A-4	U360A	A-6	E-2
J510	C-2	A-4	U360B	A-6	E-2
J511	C-1	A-4	U360C	B-7	E-2
J550	A-1	D-4	U360D	C-7	E-2
P8	A-8	F-4	U361	B-2	E-3
Q211	F-8	B-2	U361A	B-1	E-3
Q510	C-1	B-4	U361B	A-7	E-3
R211	E-8	B-2	U361C	G-1	E-3
R212	E-8	B-2	U361D	A-6	E-3
R280	H-7	F-2	U361E	A-6	E-3
R300	D-5	A-2	U361F	F-1	E-3
R340	B-3	D-2	U380	G-6	F-2
R361	F-1	E-3	U410	D-1	A-4
R362	A-7	E-3	U420	I-4	B-4
R363	G-1	E-3	U430	A-1	C-3
R380	G-6	F-2	U440	A-2	D-3
R381	G-7	F-3	U450	A-4	D-3
R450	B-8	D-3	U460	A-3	E-3
R451	B-8	D-3	W340	B-3	D-2
R452	B-8	D-3	W501	C-3	A-4
R453	B-8	E-3	W510	C-2	A-4

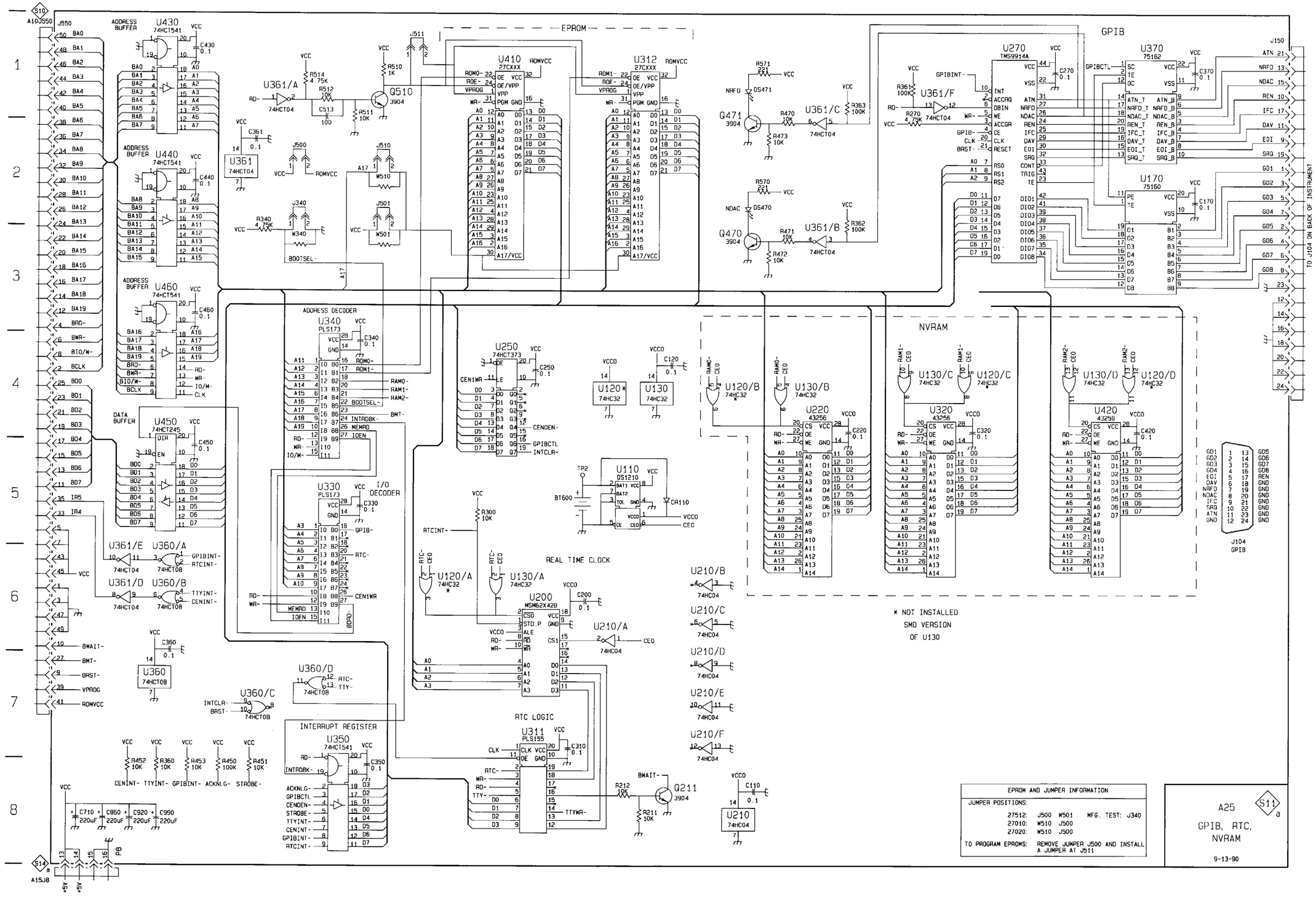
EPROM
GPIB
NVRAM
REAL TIME CLOCK
RTC LOGIC
INTERRUPT REGISTER
ADDRESS DECODER
I/O DECODER
ADDRESS BUFFER
DATA BUFFER
TO J104 ON BACK OF INSTRUMENT
J104 GPIB
* NOT INSTALLED
SMD VERSION
OF U130
EPROM AND JUMPER INFORMATION
JUMPER POSITIONS:
27512: J500 W501 MFG. TEST: J340
27010: W510 J500
27020: W510 J500
TO PROGRAM EPROMS: REMOVE JUMPER J500 AND INSTALL A JUMPER AT J511
A25
GPIB, RTC, NVRAM
9-13-90

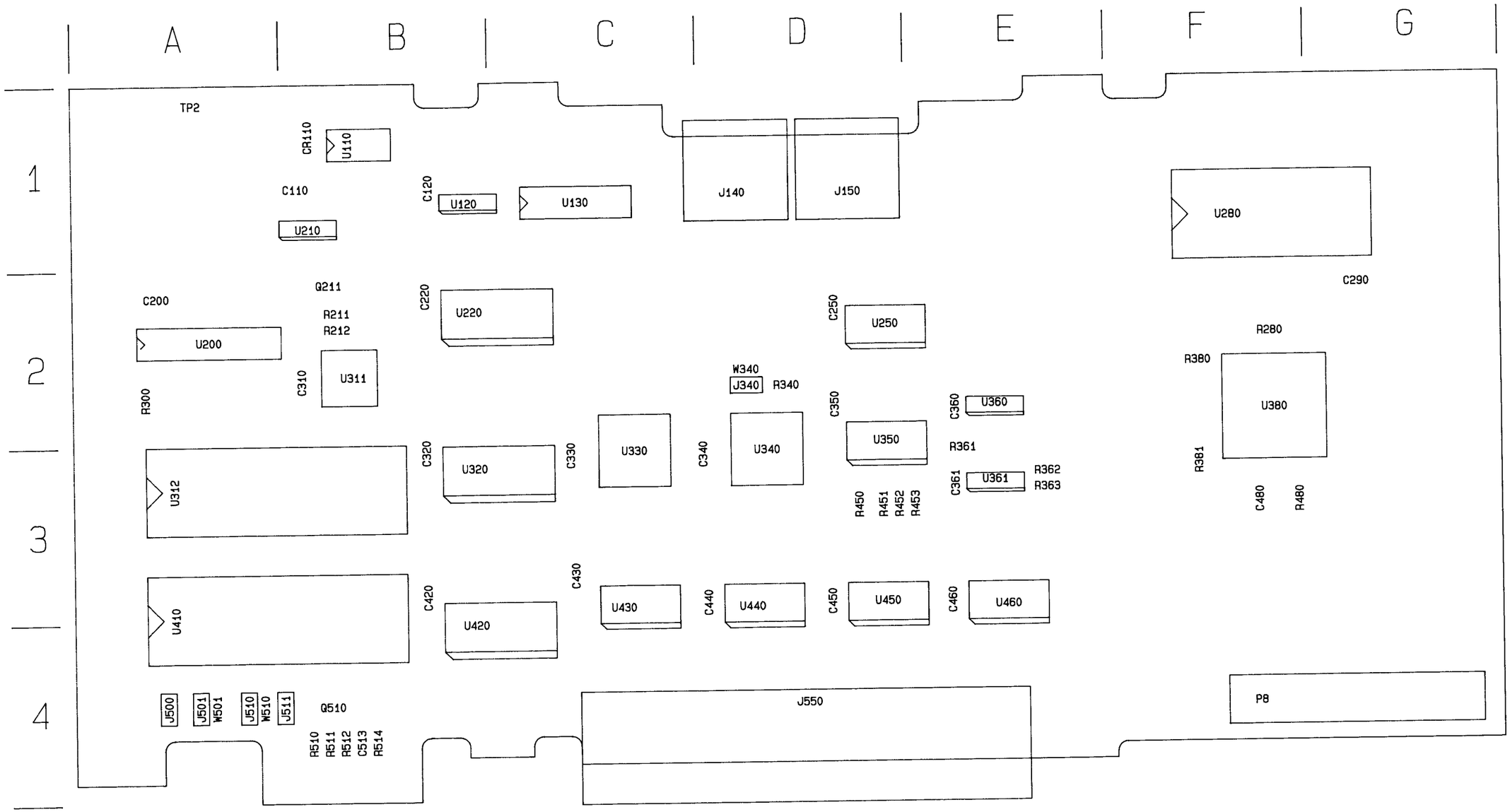

A11–RS232 Board

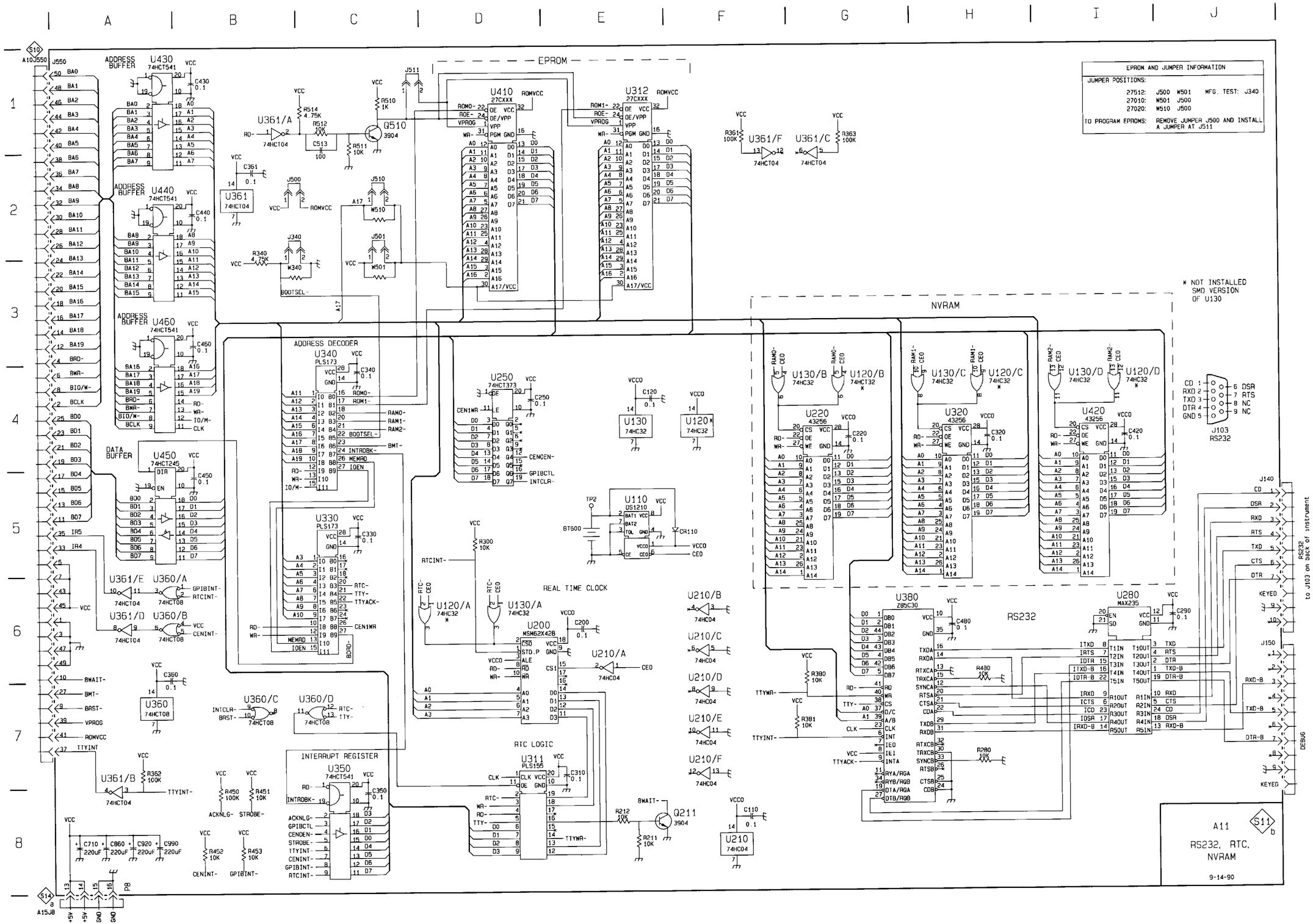
EPROM AND JUMPER INFORMATION
JUMPER POSITIONS:
27512: J500 W501 MFG. TEST: J340
27010: W501 J500
27020: W510 J500
TO PROGRAM EPROMS: REMOVE JUMPER J500 AND INSTALL A JUMPER AT J511
* NOT INSTALLED SMD VERSION OF U130
EPROM
NVRAM
ADDRESS BUFFER
DATA BUFFER
ADDRESS DECODER
REAL TIME CLOCK
RTC LOGIC
INTERRUPT REGISTER
RS232
RS232 to J103 on back of instrument
A11
RS232, RTC, NVRAM
9-14-90

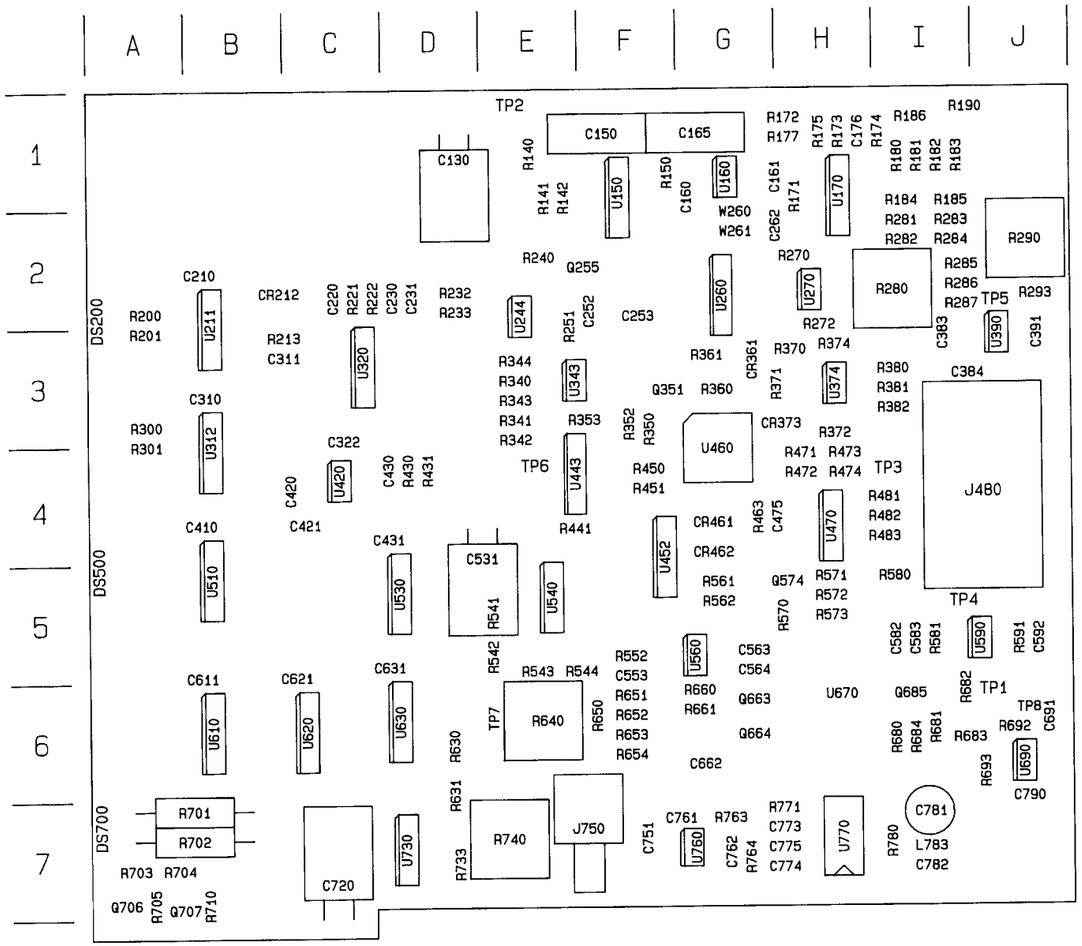

A5–Sweep Board (Front)

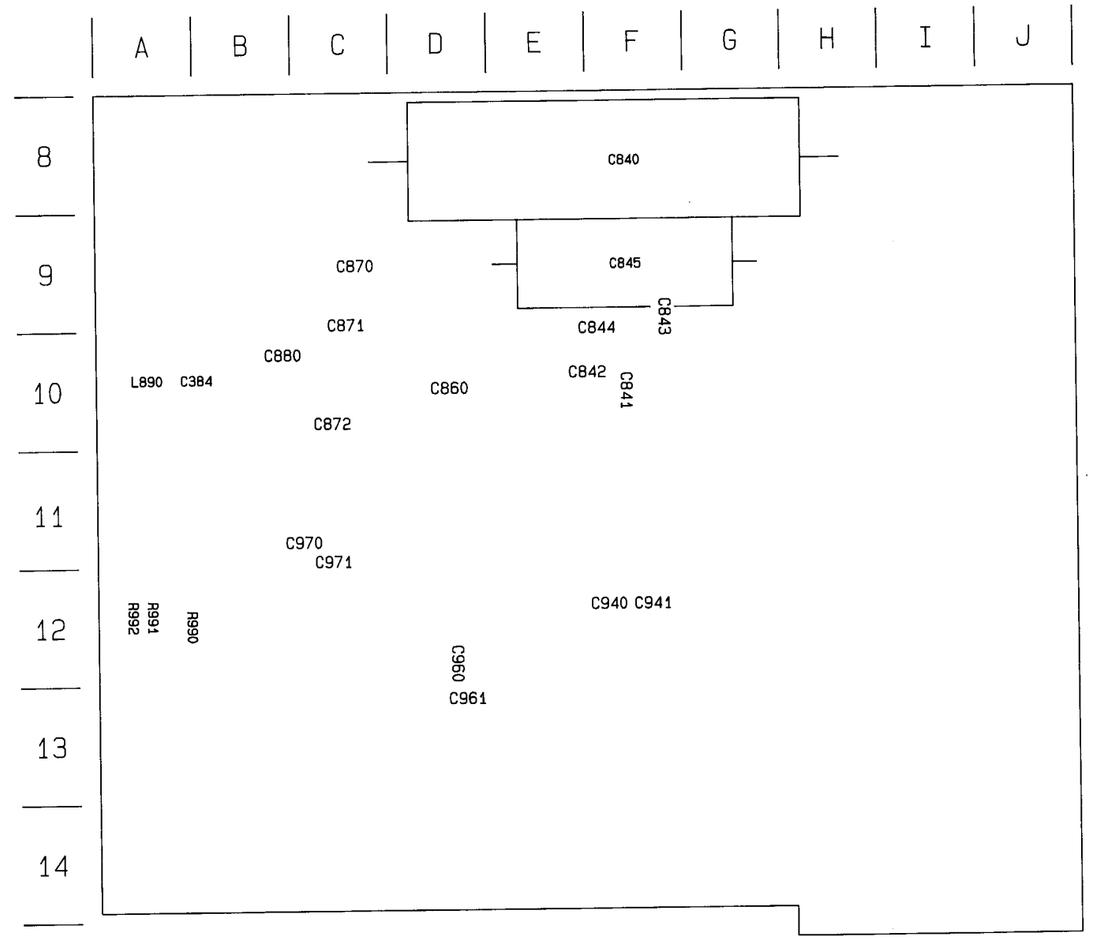

A5–Sweep Board (Rear)

A5 SWEEP

S12 a

CIRCUIT NUMBERS	SCHEMATIC LOCATION	BOARD LOCATION	CIRCUIT NUMBERS	SCHEMATIC LOCATION	BOARD LOCATION	CIRCUIT NUMBERS	SCHEMATIC LOCATION	BOARD LOCATION
C130	H-5	D-1	Q255	F-3	F-2	R474	F-3	H-4
C150	J-1	F-1	Q351	G-2	F-3	R481	H-4	I-4
C160	H-2	G-1	Q522	G-2	B-5	R482	H-4	I-4
C161	H-2	G-1	Q574	G-3	H-5	R483	H-4	I-4
C165	J-1	G-1	Q663	E-4	G-6	R520	G-2	C-5
C176	G-1	H-1	Q664	E-4	G-6	R521	G-2	C-5
C210	B-4	B-2	Q685	G-5	I-6	R541	F-5	E-5
C220	D-3	C-2	Q706	J-5	A-7	R542	F-5	E-5
C230	D-2	D-2	Q707	I-5	A-7	R543	E-4	E-5
C231	I-6	D-2	R140	F-1	E-1	R544	F-4	E-5
C252	F-3	F-2	R141	I-2	E-1	R552	D-4	F-5
C253	F-3	F-2	R142	I-2	E-1	R561	D-1	G-5
C262	H-3	G-2	R150	J-1	F-1	R562	E-1	G-5
C310	B-5	B-3	R171	H-1	H-1	R570	G-3	H-5
C311	A-4	B-3	R172	G-1	H-1	R571	I-4	H-5
C322	D-3	C-3	R173	G-1	H-1	R572	I-4	H-5
C383	H-6	I-3	R174	G-1	I-1	R573	F-3	H-5
C384	J-6	I-3	R175	G-1	H-1	R580	I-3	I-5
C391	J-6	J-3	R177	J-1	H-1	R581	I-5	I-5
C410	D-4	B-4	R180	H-1	I-1	R591	I-5	J-5
C420	C-3	C-4	R181	H-1	I-1	R630	A-3	D-6
C421	C-3	C-4	R182	H-2	I-1	R631	A-3	D-6
C430	C-3	D-4	R183	H-2	I-1	R640	E-4	E-6
C431	B-5	D-4	R184	H-1	I-1	R650	E-5	F-6
C475	G-3	G-4	R185	H-1	I-1	R651	D-5	F-6
C531	H-6	D-4	R186	I-1	I-1	R652	D-5	F-6
C553	D-5	F-5	R190	I-2	I-1	R653	D-5	F-6
C563	E-5	G-5	R200	A-4	A-2	R654	D-5	F-6
C564	E-5	G-5	R201	A-5	A-3	R660	E-4	G-6
C582	G-4	I-5	R213	A-4	C-3	R661	E-5	G-6
C583	I-5	I-5	R221	D-3	D-2	R680	G-5	I-6
C592	I-5	J-5	R222	D-2	D-2	R681	A-6	I-6
C611	B-4	B-5	R232	A-3	D-2	R682	J-3	I-6
C621	D-5	C-5	R233	A-3	D-2	R683	C-1	I-6
C631	D-5	D-5	R240	F-3	E-2	R684	G-5	I-6
C662	E-5	G-6	R344	A-2	E-3	R692	C-1	J-6
C691	C-1	J-6	R251	G-3	E-2	R693	C-2	J-6
C720	J-6	C-7	R361	F-1	G-3	R701	J-5	A-7
C751	A-1	F-7	R270	H-3	H-2	R702	J-5	A-7
C761	B-1	G-7	R272	H-3	H-2	R703	J-5	A-7
C762	B-1	G-7	R280	H-3	I-2	R704	I-5	A-7
C773	C-2	H-7	R281	H-1	I-2	R705	J-5	A-7
C774	B-1	H-7	R282	H-1	I-2	R710	I-5	B-7
C775	C-2	H-7	R283	H-1	I-2	R733	A-6	D-7
C781	C-1	I-7	R284	H-1	I-2	R740	C-2	E-7
C782	C-1	I-7	R285	H-2	I-2	R763	A-1	G-7
C790	C-2	J-7	R286	H-2	I-2	R764	B-2	G-7
C840	J-1	F-8	R287	H-2	I-2	R771	B-2	H-7
C841	B-4	F-10	R290	H-2	J-2	R780	C-1	I-7
C842	B-3	E-10	R293	H-2	J-2	R990	I-4	A12
C843	B-3	F-9	R300	A-5	A-3	R991	I-4	A12
C844	B-2	F-9	R301	A-6	A-3	R992	I-4	A12
C845	J-1	F-9	R340	B-3	E-3	TP1	J-3	J-6
C860	G-2	D-10	R341	B-3	E-3	TP2	J-2	E-1
C870	I-3	C-9	R342	B-3	E-3	TP3	G-3	I-4
C871	I-3	C-9	R343	A-3	E-3	TP4	H-5	I-5
C872	H-2	C-10	R350	B-4	F-3	TP5	H-6	J-2
C880	H-2	B-10	R352	C-3	F-3	TP6	J-4	E-4
C940	F-4	F-12	R353	C-3	F-3	TP7	J-4	E-6
C941	F-5	F-12	R360	G-2	G-3	TP8	D-1	J-6
C960	D-4	D-12	R370	H-2	H-3	U150	J-1	F-1
C961	D-5	D-13	R371	F-2	H-3	U160	H-2	G-1
C970	F-2	C-11	R372	F-2	H-3	U170	I-1	H-1
C971	F-2	C-11	R374	H-3	H-3	U211	A-4	B-2
CR212	A-4	B-2	R380	E-1	I-3	U244	A-3	E-2
CR361	F-2	G-3	R381	E-2	I-3	U260A	A-2	G-2
CR373	F-2	G-3	R382	E-2	I-3	U260B	I-2	G-2
CR461	E-1	G-4	R430	C-3	D-4	U260C	D-1	G-2
CR462	D-1	G-4	R431	C-3	D-4	U260D	E-1	G-2
DS200	J-5	A-2	R441	B-3	E-4	U270	I-3	H-2
DS500	J-5	A-5	R450	F-3	F-4	U312	A-5	B-3
DS700	J-5	A-7	R451	F-3	F-4	U320A	D-3	C-3
J480	A-1	J-4	R463	G-3	G-4	U320B	D-2	C-3
J750	A-1	F-7	R471	F-2	H-4	U343	B-3	E-3
L783	C-1	I-7	R472	F-3	H-4	U374A	H-2	H-3
L890	J-6	A-10	R473	F-3	H-4	U374B	F-2	H-3

A5 SWEEP

(Continued)

S12 a

CIRCUIT NUMBERS	SCHEMATIC LOCATION	BOARD LOCATION	CIRCUIT NUMBERS	SCHEMATIC LOCATION	BOARD LOCATION
U390	I-6	J-3	U590	I-5	J-5
U420	C-3	C-4	U610	B-4	B-6
U443A	B-3	E-4	U620	C-5	C-6
U443B	B-3	E-4	U630	C-5	D-6
U443C	B-2	E-4	U670	G-4	H-6
U443D	B-4	E-4	U690	C-1	J-6
U452	E-2	F-4	U730A	D-3	D-7
U460	G-3	G-4	U730B	H-6	D-7
U470A	F-3	H-4	U730C	A-3	D-7
U470B	I-4	H-4	U730E	B-6	D-7
U510	C-4	B-5	U730F	B-2	D-7
U530	B-5	D-5	U760	A-1	G-7
U540A	F-4	E-5	U770	C-1	H-7
U540B	I-3	E-5	W260	H-2	G-2
U560A	D-5	G-5	W261	H-2	G-2
U560B	E-5	G-5			

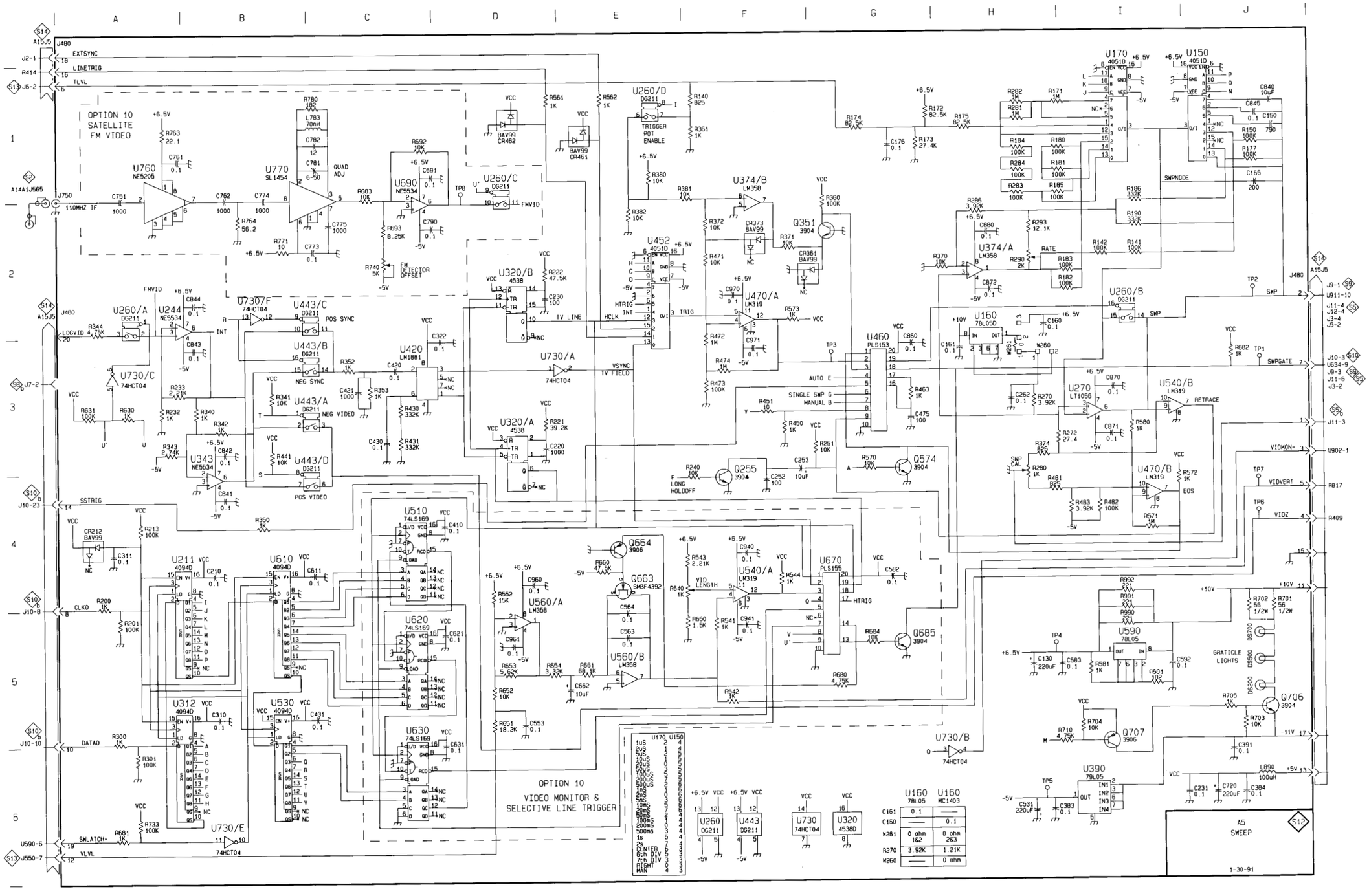
OPTION 10
SATELLITE
FM VIDEO
OPTION 10
VIDEO MONITOR &
SELECTIVE LINE TRIGGER
A5
SWEEP
1-30-91
EXTSYNC
LINETRIG
TLVL
110MHZ IF
FMVID
LOGVID
SSTRIG
CLKO
DATAO
SMLATCH-
VLVL
POS SYNC
NEG SYNC
NEG VIDEO
POS VIDEO
TV LINE
VSYNC
TV FIELD
TRIGGER
POT
ENABLE
HTRIG
INT
HCLK
AUTO E
SINGLE SWP G
MANUAL B
LONG
HOLDOFF
VID
LENGTH
SWPNODE
SWP
SWPGATE
RATE
RETRACE
EOS
VIDMON-
VIDVERT
VIDZ
GRATICLE
LIGHTS
SWP
CAL
FM
DETECTOR
OFFSET
QUAD
ADJ
U760
NE5205
U770
SL1454
U690
NE5534
U260/A
DG211
U244
NE5534
U730/C
74HCT04
U730/F
74HCT04
U443/C
DG211
U443/B
DG211
U443/A
DG211
U443/D
DG211
U343
NE5534
U420
LM1881
U730/A
74HCT04
U320/B
4538
U320/A
4538
U260/C
DG211
U260/D
DG211
U452
4051D
U374/B
LM358
U374/A
LM358
U470/A
LM319
U460
PLS153
U160
78L05
U170
4051D
U150
4051D
U260/B
DG211
U270
LT1056
U540/B
LM319
U470/B
LM319
U510
74LS169
U620
74LS169
U630
74LS169
U211
4094D
U610
4094D
U312
4094D
U530
4094D
U730/E
74HCT04
U560/A
LM358
U560/B
LM358
U540/A
LM319
U670
PLS155
U730/B
74HCT04
U590
78L05
U390
79L05
U260
DG211
U443
DG211
U730
74HCT04
U320
4538D
U160 78L05
U160 MC1403
C161 0.1
C150 — 0.1
W251 0 ohm 162 0 ohm 263
R270 3.92K 1.21K
W260 — 0 ohm

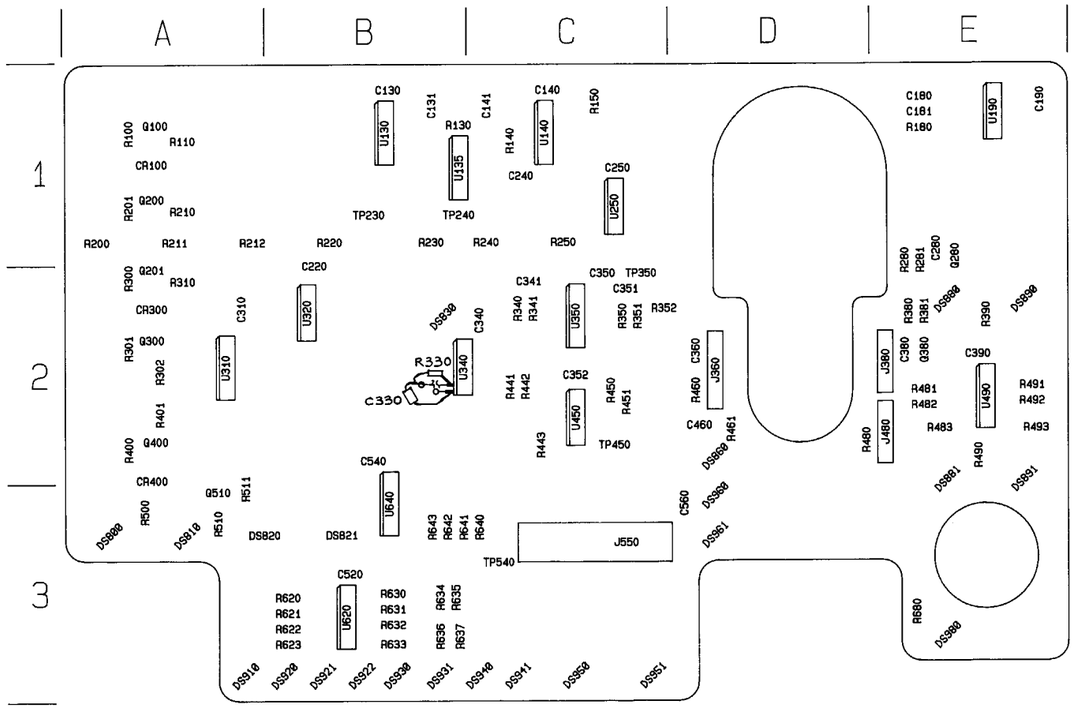

A6–Front PaneL Board

FRONT PANEL

S13

CIRCUIT NUMBER	SCHEMATIC LOCATION	BOARD LOCATION	CIRCUIT NUMBER	SCHEMATIC LOCATION	BOARD LOCATION	CIRCUIT NUMBER	SCHEMATIC LOCATION	BOARD LOCATION
C130	F-1	B-1	Q100	D-1	A-1	R620	E-6	B-3
C131	J-4	B-1	Q200	D-2	A-1	R621	E-6	B-3
C140	F-2	C-1	Q201	D-3	A-2	R622	E-6	B-3
C141	J-3	C-1	Q280	H-3	E-1	R623	E-6	B-3
C180	A-6	E-1	Q300	D-3	A-2	R630	E-6	B-3
C181	A-6	E-1	Q380	H-4	E-2	R631	E-6	B-3
C190	I-3	E-1	Q400	D-4	A-2	R632	E-7	B-3
C220	G-7	B-1	Q510	D-5	A-3	R633	E-7	B-3
C240	I-1	C-1	R100	D-1	A-1	R634	C-7	B-3
C250	G-2	C-1	R110	D-2	A-1	R635	C-7	B-3
C280	H-4	E-1	R130	J-4	B-1	R636	C-7	B-3
C310	F-4	A-2	R140	I-1	C-1	R637	C-8	B-3
C340	H-2	C-2	R150	C-5	C-1	R640	C-8	C-3
C341	F-3	C-2	R180	A-6	E-1	R641	C-8	B-3
C350	G-1	C-2	R200	A-5	A-1	R642	C-8	B-3
C351	G-2	C-2	R201	D-2	A-1	R643	C-8	B-3
C352	J-1	C-2	R210	D-2	A-1	R680	A-8	E-3
C360	J-1	D-2	R211	A-5	A-1	TP230	I-7	B-1
C380	H-4	E-2	R212	A-5	A-1	TP240	I-1	B-1
C390	B-6	E-2	R220	B-5	B-1	TP350	H-1	C-2
C460	J-1	D-2	R230	B-5	B-1	TP450	J-2	C-2
C520	D-6	B-3	R240	B-5	C-1	TP540	J-2	C-3
C540	B-7	B-2	R250	B-5	C-1	U130	F-1	B-1
C560	J-7	D-3	R280	H-3	E-1	U135	J-3	B-2
CR100	E-2	A-1	R281	H-3	E-1	U135A	J-4	B-2
CR300	E-3	A-2	R300	D-3	A-2	U135B	I-1	B-2
CR400	E-5	A-2	R301	D-3	A-2	U140	F-2	C-1
DS800	E-6	A-3	R302	D-4	A-2	U190	I-3	E-1
DS810	E-6	A-3	R310	D-3	A-2	U190A	A-6	E-1
DS820	E-6	A-3	R340	F-3	C-2	U190B	H-5	E-1
DS821	E-6	B-3	R341	F-3	C-2	U190C	I-2	E-1
DS830	E-7	B-2	R350	G-2	C-2	U190D	H-5	E-1
DS860	C-6	D-2	R351	G-2	C-2	U190E	I-4	E-1
DS880	C-6	E-2	R352	C-5	C-2	U190F	I-3	E-1
DS881	C-6	E-2	R380	H-4	E-2	U250	G-2	C-1
DS890	C-6	E-2	R381	H-4	E-2	U250A	I-4	C-1
DS891	C-6	E-2	R390	C-6	E-2	U250C	G-1	C-1
DS910	E-6	A-3	R400	D-4	A-2	U250D	G-3	C-1
DS920	E-6	B-3	R401	D-4	A-2	U310	F-4	A-2
DS921	C-7	B-3	R441	I-3	C-2	U320	G-7	B-2
DS922	C-7	B-3	R442	J-2	C-2	U320A	H-6	B-2
DS930	C-7	B-3	R443	I-5	C-2	U320B	H-7	B-2
DS931	C-8	B-3	R450	I-2	C-2	U340	H-2	B-2
DS940	C-8	C-3	R451	I-2	C-2	U340A	H-1	B-2
DS941	C-8	C-3	R460	J-7	D-2	U340B	H-2	B-2
DS950	C-8	C-3	R461	J-5	D-2	U350	G-2	C-2
DS951	C-8	C-3	R480	J-7	D-2	U350A	F-3	C-2
DS960	C-6	D-3	R481	C-6	E-2	U350B	F-2	C-2
DS961	E-7	D-3	R482	C-6	E-2	U450	J-1	C-2
DS980	A-7	E-3	R483	C-5	E-2	U450A	B-7	C-2
J360	J-6	D-2	R490	C-6	E-2	U450B	J-5	C-2
J380	H-3	E-2	R491	C-6	E-2	U450C	J-2	C-2
J480	J-7	E-2	R492	C-6	E-2	U450D	I-2	C-2
J550	A-6	C-3	R493	C-5	E-2	U490	B-6	E-2
J550	J-5	C-3	R500	E-4	A-3	U620	D-6	B-3
J550	J-1	C-3	R510	D-5	A-3	U640	B-7	B-3
J550	J-7	C-3	R511	D-5	A-3			

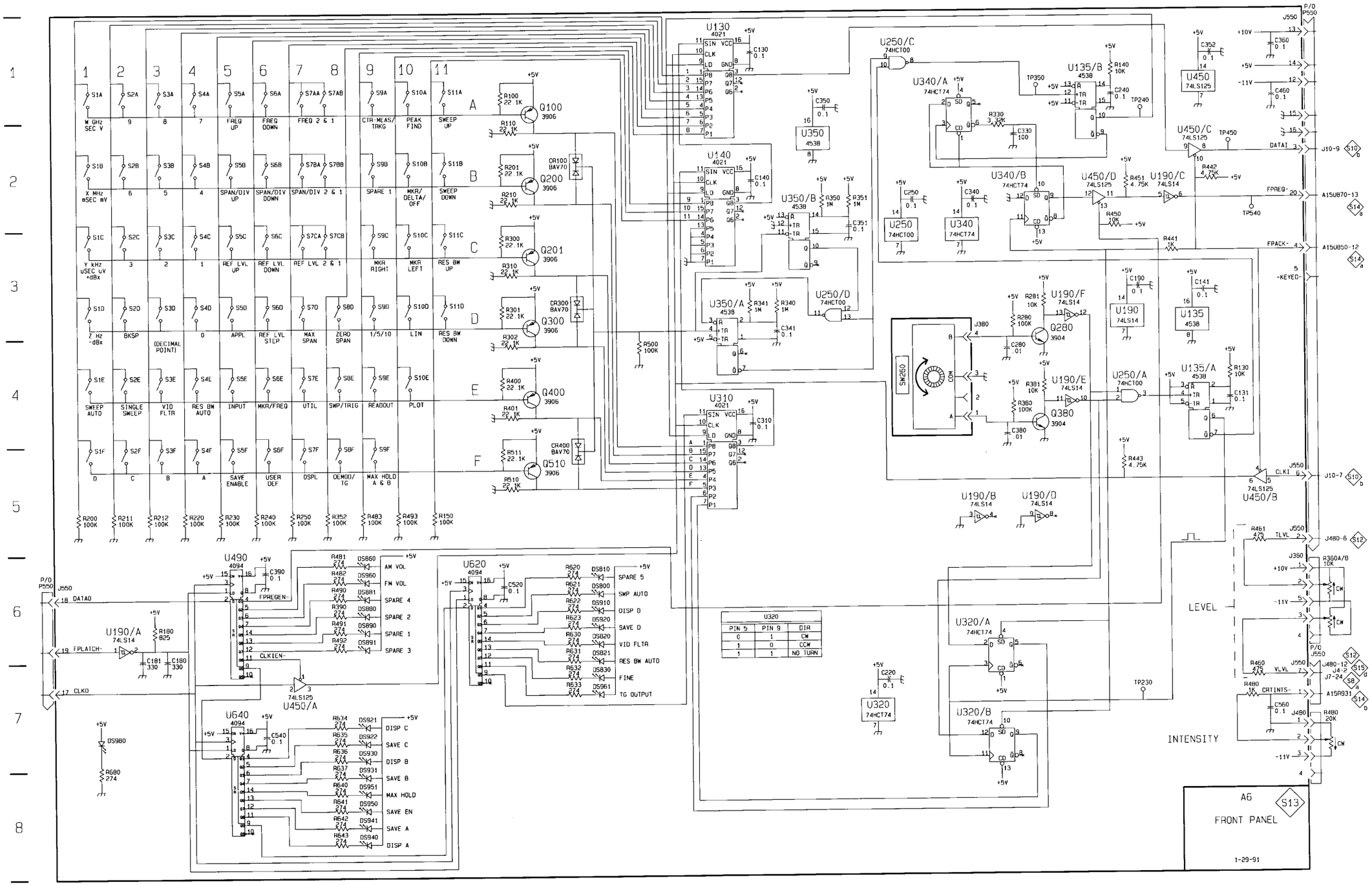
A6
FRONT PANEL
S13
1-29-91
LEVEL
INTENSITY
U130 4021
U140 4021
U310 4021
U490 4094
U620 4094
U640 4094
U450 74LS125
U450/A 74LS125
U450/B 74LS125
U450/C 74LS125
U450/D 74LS125
U190/A 74LS14
U190/B 74LS14
U190/C 74LS14
U190/D 74LS14
U190/E 74LS14
U190/F 74LS14
U190 74LS14
U135 4538
U135/A 4538
U135/B 4538
U350 4538
U350/A 4538
U350/B 4538
U250 74HC100
U250/A 74HC100
U250/B 74HC100
U250/C 74HC100
U250/D 74HC100
U320 74HC174
U320/A 74HC174
U320/B 74HC174
U340 74HC174
U340/A 74HC174
U340/B 74HC174
SW260
Q100 3906
Q200 3906
Q201 3906
Q300 3906
Q400 3906
Q510 3906
Q280 3904
Q380 3904
CR100 BAV70
CR300 BAV70
CR400 BAV70
DS980
P/O P550
J550
J10-9
J10-7
J480-6
J480-12
J7-24
J4-2
A15U870-13
A15U850-12
A15R931
DATAO
FPLATCH-
CLKO
DATAI
FPREQ-
FPACK-
-KEYED-
CLKI
TLVL
VLVL
CRTINTS-
FPREQEN-
CLKIEN-
AM VOL
FM VOL
SPARE 4
SPARE 2
SPARE 1
SPARE 3
SPARE 5
SWP AUTO
DISP D
SAVE D
VID FLTR
RES BW AUTO
FINE
TG OUTPUT
DISP C
SAVE C
DISP B
SAVE B
MAX HOLD
SAVE EN
SAVE A
DISP A
U320
PIN 5 | PIN 9 | DIR
0 | 1 | CW
1 | 0 | CCW
1 | 1 | NO TURN

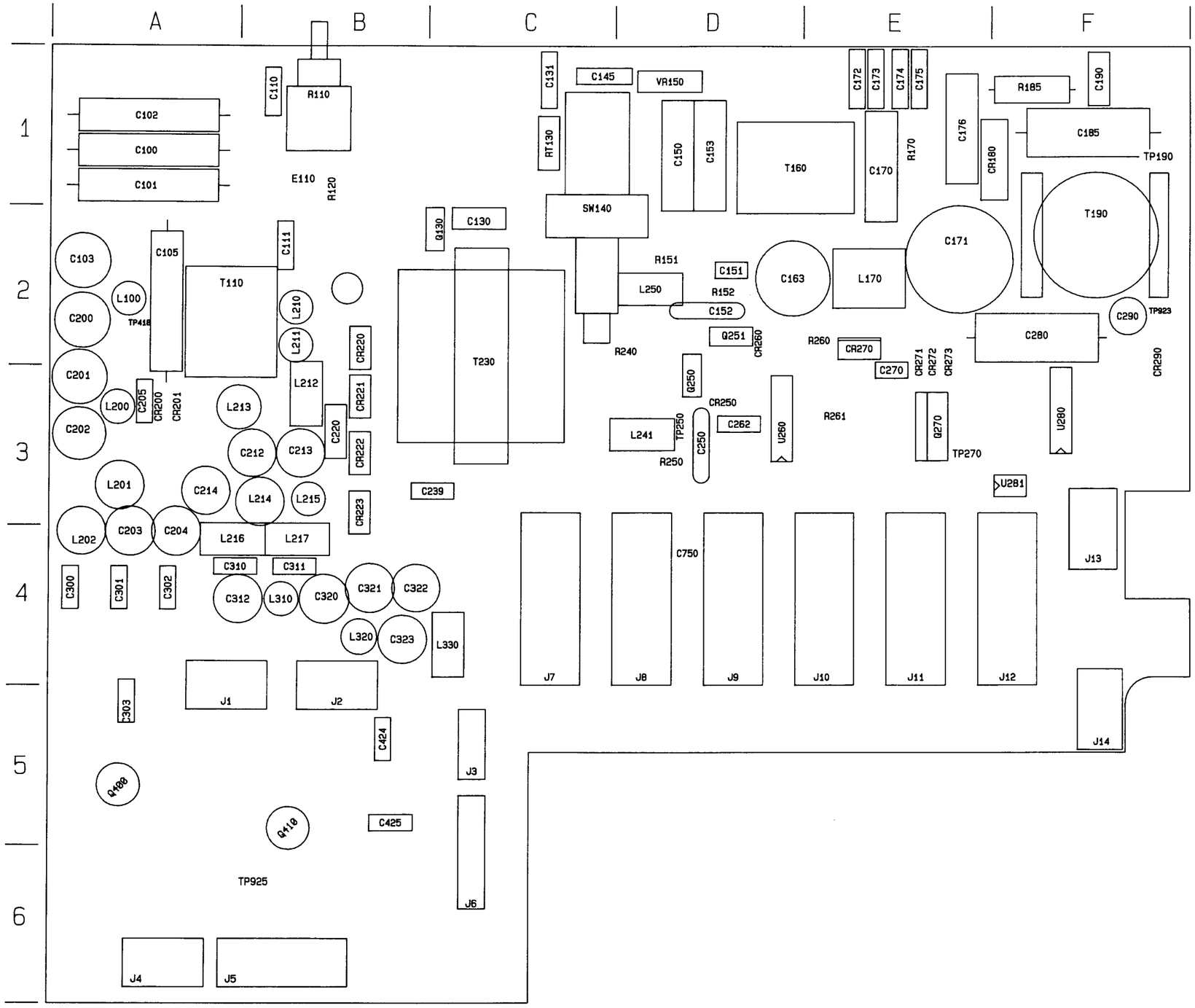

A15–Power Supply Board (Front)

B029999 and below

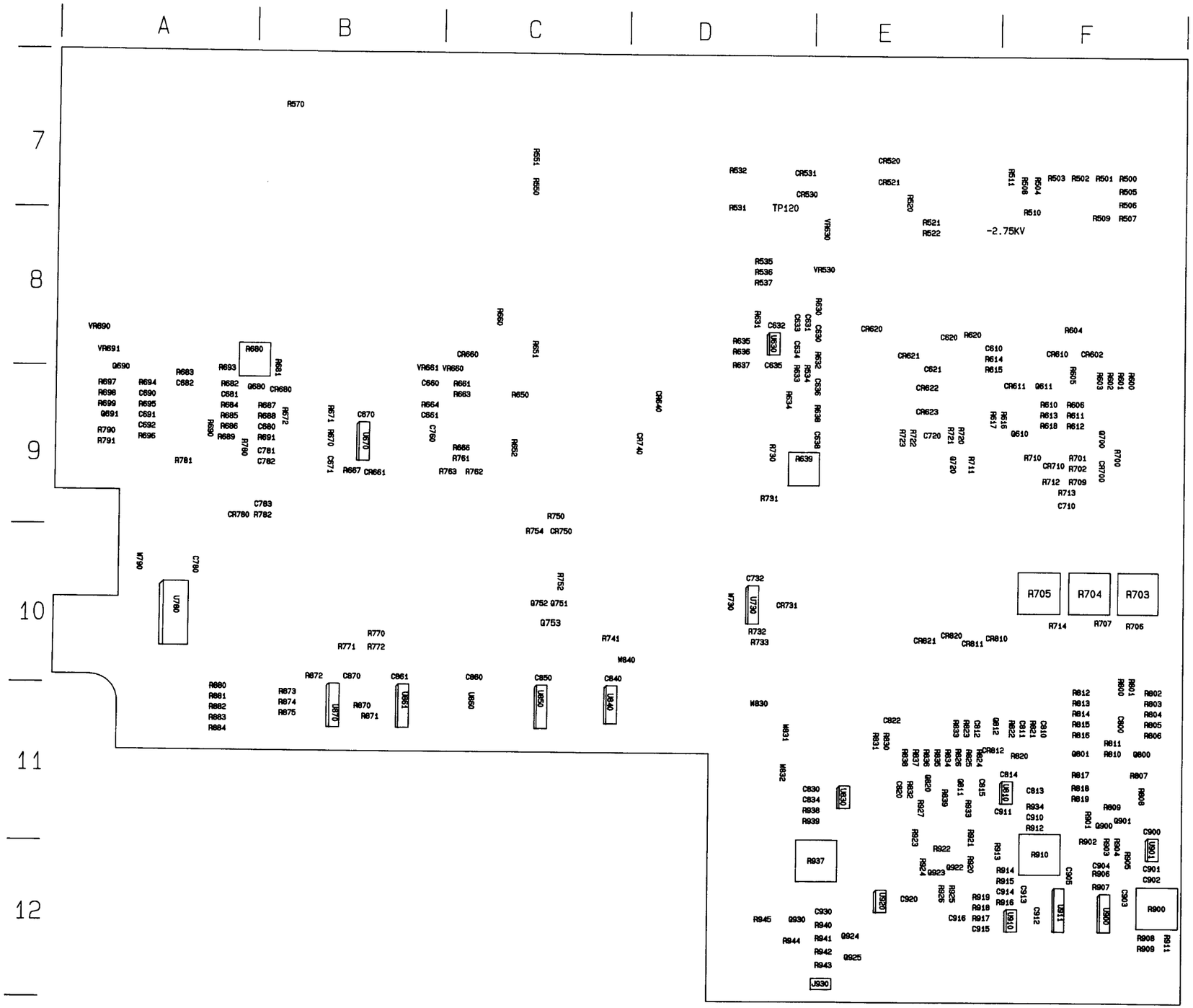

A15–Power Supply Board (Rear)

B029999 and below

POWER SUPPLY

S14
a

CIRCUIT NUMBER	SCHEMATIC LOCATION	BOARD LOCATION	CIRCUIT NUMBER	SCHEMATIC LOCATION	BOARD LOCATION	CIRCUIT NUMBER	SCHEMATIC LOCATION	BOARD LOCATION
C103	I-3	A-2	CR271	E-5	E-2	R652	B-8	C-9
C131	B-1	C-1	CR272	E-5	E-2	R660	D-7	C-8
C145	B-2	C-1	CR273	E-5	E-2	R661	B-7	C-9
C150	C-1	D-1	CR290	D-2	F-2	R663	B-8	C-9
C151	D-6	D-2	CR620	H-3	E-8	R664	B-7	B-9
C152	E-8	D-2	CR621	H-4	E-8	R666	A-7	C-9
C153	C-1	D-1	CR640	E-7	D-9	R667	D-6	B-9
C163	E-7	D-2	CR660	C-7	C-8	R670	B-6	B-9
C170	D-1	E-1	CR661	D-6	B-9	R671	A-6	B-9
C171	E-2	E-2	CR680	D-4	B-9	R672	D-5	B-9
C172	D-1	E-1	CR731	I-5	D-10	R680	B-4	B-8
C173	D-1	E-1	CR740	E-7	D-9	R681	B-4	B-8
C174	D-2	E-1	CR750	H-6	C-10	R682	A-5	A-9
C175	D-2	E-1	CR780	A-3	A-9	R683	C-5	A-9
C176	D-1	E-1	CR810	H-5	E-10	R684	A-5	A-9
C185	E-2	F-1	CR811	H-4	E-10	R685	A-5	A-9
C190	D-3	F-1	CR820	I-5	E-10	R686	A-5	A-9
C200	I-3	A-2	CR821	H-5	E-10	R687	C-5	B-9
C201	I-4	A-3	F15	B-1	CHASSIS	R688	B-5	B-9
C202	I-4	A-3	FL15	A-1	CHASSIS	R689	A-5	A-9
C203	H-6	A-4	L100	I-3	A-2	R690	A-5	A-9
C204	I-6	A-4	L170	E-5	E-2	R691	B-5	B-9
C212	G-7	B-3	L200	I-4	A-3	R693	A-5	A-9
C213	H-7	B-3	L201	I-6	A-3	R694	B-4	A-9
C214	H-6	A-3	L202	H-6	A-4	R695	B-4	A-9
C239	B-2	C-3	L210	I-3	B-2	R696	B-5	A-9
C250	E-7	D-3	L211	I-4	B-2	R697	B-3	A-9
C262	A-8	D-3	L212	G-7	B-3	R698	B-2	A-9
C270	E-5	E-3	L213	G-7	B-3	R699	B-3	A-9
C280	E-3	F-2	L214	H-6	B-3	R750	H-7	C-9
C290	B-3	F-2	L215	G-6	B-3	R752	I-7	C-10
C310	H-4	B-4	L216	G-4	A-4	R754	H-7	C-10
C311	H-5	B-4	L217	G-5	B-4	R761	A-7	C-9
C312	I-5	B-4	L241	E-6	D-3	R762	C-6	C-9
C320	J-5	B-4	L250	E-7	D-2	R763	C-6	C-9
C321	G-6	B-4	L310	I-4	B-4	R771	J-7	B-10
C322	J-5	B-4	L320	J-5	B-4	R772	J-7	B-10
C323	I-5	B-4	L330	I-5	C-4	R780	A-3	A-9
C425	I-1	B-5	Q250	D-7	D-3	R781	A-4	A-9
C610	D-1	E-8	Q251	D-7	D-2	R782	B-3	B-9
C630	H-4	E-8	Q270	D-4	E-3	R790	C-2	A-9
C631	H-4	D-8	Q680	D-5	B-9	R791	C-2	A-9
C633	B-2	D-8	Q690	C-3	A-9	R937	H-2	E-12
C634	A-2	D-8	Q691	C-2	A-9	R938	H-1	E-11
C636	F-7	E-9	Q751	I-7	C-10	R939	H-2	E-11
C638	F-6	E-9	Q752	J-7	C-10	RT130	B-1	C-1
C660	A-7	B-9	Q753	I-6	C-10	SW140	B-1	C-2
C661	B-8	B-9	R151	E-8	D-2	T110	C-1	A-2
C670	A-7	B-9	R152	D-6	D-2	T160	C-1	D-1
C671	B-6	B-9	R170	E-1	E-1	T190	E-2	F-2
C680	B-5	B-9	R185	B-2	F-1	T230	F-2	C-2
C681	A-5	A-9	R240	E-7	D-2	T230	F-6	C-2
C682	C-3	A-9	R250	E-7	D-3	TP190	E-2	F-1
C690	A-4	A-9	R260	D-6	E-2	TP250	D-7	D-3
C691	B-4	A-9	R261	C-6	E-3	TP270	D-4	E-3
C692	B-4	A-9	R531	C-1	D-7	TP293	E-6	F-2
C750	H-7	D-4	R532	C-1	D-7	U260	B-7	D-3
C760	C-7	B-9	R534	A-2	D-8	U280	C-4	F-3
C781	A-3	B-9	R550	C-1	C-7	U281	B-3	F-3
C782	A-3	B-9	R551	C-2	C-7	U630B	A-2	D-8
C783	B-3	B-9	R570	D-2	B-7	U670	A-7	B-9
C830	H-1	E-11	R614	D-1	E-8	U670A	B-6	B-9
C834	I-1	E-11	R615	D-1	E-9	U670B	A-7	B-9
CR180	E-1	F-1	R630	H-4	E-8	U830	H-1	E-11
CR220	G-7	B-2	R632	F-7	E-8	U920	G-1	E-12
CR221	G-6	B-3	R633	A-2	D-8	VR150	C-1	D-1
CR222	G-5	B-3	R634	A-2	D-9	VR660	C-7	C-8
CR223	G-6	B-3	R638	F-6	E-9	VR661	C-7	B-8
CR250	D-7	D-3	R650	C-7	C-9	VR690	D-2	A-8
CR260	D-7	D-2	R651	C-7	C-8	VR691	C-3	A-8
CR270	E-5	E-2						

POWER SUPPLY

S14 b

CIRCUIT NUMBER	SCHEMATIC LOCATION	BOARD LOCATION	CIRCUIT NUMBER	SCHEMATIC LOCATION	BOARD LOCATION	CIRCUIT NUMBER	SCHEMATIC LOCATION	BOARD LOCATION
C100	C-3	A-1	Q922	H-7	E-12	R818	J-4	F-11
C101	B-3	A-1	Q923	G-7	E-12	R819	J-4	F-11
C102	C-3	A-1	Q924	G-1	E-12	R820	E-6	F-11
C105	D-4	A-2	Q925	G-1	E-12	R821	F-2	F-11
C110	D-2	B-1	Q930	A-8	D-12	R822	E-6	F-11
C111	C-3	B-2	R110	D-2	B-1	R823	F-6	E-11
C130	A-1	C-2	R120	C-3	B-1	R824	H-6	E-11
C205	D-6	A-3	R500	D-2	F-7	R825	H-6	E-11
C220	B-4	B-3	R501	D-2	F-7	R826	H-5	E-11
C300	C-4	A-4	R502	D-2	F-7	R830	G-5	E-11
C301	G-3	A-4	R503	C-2	F-7	R831	G-5	E-11
C302	G-2	A-4	R504	C-2	F-7	R832	G-6	E-11
C303	H-1	A-5	R505	D-2	F-7	R833	F-6	E-11
C424	G-5	B-5	R506	D-2	F-7	R834	G-5	E-11
C620	C-4	E-8	R507	C-2	F-7	R835	G-5	E-11
C621	A-4	E-8	R508	C-2	F-7	R836	G-5	E-11
C632	C-1	D-8	R509	C-2	F-7	R837	G-6	E-11
C635	C-2	D-8	R510	B-2	F-8	R838	G-6	E-11
C710	B-8	F-9	R511	B-2	F-7	R839	G-6	E-11
C720	B-4	E-9	R520	D-3	E-7	R900	I-2	F-12
C732	B-6	D-10	R521	E-5	E-8	R901	G-4	F-11
C800	H-3	F-11	R522	F-5	E-8	R902	G-4	F-11
C810	F-2	F-11	R530	B-1	D-7	R903	H-4	F-11
C811	E-6	F-11	R600	D-8	F-9	R904	H-4	F-11
C812	E-6	E-11	R601	D-8	F-9	R905	I-3	F-12
C813	G-4	F-11	R602	D-7	F-9	R906	I-5	F-12
C814	F-7	F-11	R603	D-7	F-9	R907	I-5	F-12
C815	G-8	E-11	R604	C-3	F-8	R908	J-2	F-12
C820	G-6	E-11	R605	C-6	F-9	R909	J-3	F-12
C822	J-7	E-11	R606	C-6	F-9	R910	J-6	F-12
C900	I-2	F-11	R610	D-6	F-9	R911	I-2	F-12
C901	I-3	F-12	R611	C-6	F-9	R912	F-8	F-11
C902	I-3	F-12	R612	C-6	F-9	R913	J-7	F-12
C903	I-4	F-12	R616	B-6	F-9	R914	J-7	F-12
C904	H-5	F-12	R617	B-6	E-9	R915	J-6	F-12
C905	I-1	F-12	R620	C-4	E-8	R916	I-7	F-12
C910	F-8	F-11	R631	C-1	D-8	R917	I-7	E-12
C911	F-8	F-11	R635	C-2	D-8	R918	J-7	E-12
C912	I-1	F-12	R636	C-2	D-8	R919	J-7	E-12
C913	I-7	F-12	R637	B-2	D-8	R920	G-8	E-12
C914	I-7	F-12	R639	C-1	D-9	R921	H-7	E-11
C915	I-7	E-12	R700	C-7	F-9	R922	G-7	E-12
C916	J-7	E-12	R701	C-7	F-9	R923	F-7	E-11
C920	G-8	E-12	R702	C-7	F-9	R924	G-7	E-12
C930	H-1	E-12	R703	B-4	F-10	R925	H-8	E-12
CR520	D-3	E-7	R704	G-3	F-10	R926	G-8	E-12
CR521	D-3	E-7	R705	G-2	F-10	R927	G-6	E-11
CR530	A-1	E-7	R706	B-3	F-10	R933	H-7	E-11
CR531	A-2	D-7	R707	G-3	F-10	R934	F-8	F-11
CR602	D-4	F-8	R709	B-8	F-9	R940	G-1	E-12
CR610	C-3	F-8	R710	B-6	F-9	R941	G-1	E-12
CR611	D-7	F-9	R711	B-5	E-9	R942	G-1	E-12
CR622	A-4	E-9	R712	B-7	F-9	R943	G-1	E-12
CR623	A-4	E-9	R713	B-8	F-9	R944	A-8	D-12
CR700	C-7	F-9	R714	G-2	F-10	R945	A-8	D-12
CR710	C-8	F-9	R720	B-4	E-9	TP120	B-1	D-7
CR812	E-6	E-11	R721	B-4	E-9	TP418	C-4	A-2
DS110	D-5	A-1	R722	B-4	E-9	TP925	H-7	B-6
DS111	C-3	B-1	R723	B-4	E-9	U120	B-2	CHASSIS
DS112	C-3	B-1	R730	C-1	D-9	U630A	C-1	D-8
J1	F-2	A-5	R731	D-1	D-9	U730	B-7	D-10
J2	J-3	B-5	R732	A-7	D-10	U730A	A-6	D-10
J2	J-7	B-5	R733	A-6	D-10	U730B	A-6	D-10
J2	J-1	B-5	R800	H-1	F-10	U730C	A-7	D-10
J930	F-1	E-12	R801	H-1	F-10	U730D	B-6	D-10
Q130	B-1	C-2	R802	H-1	F-10	U810A	F-7	F-11
Q400A	H-4	A-5	R803	H-1	F-11	U810B	G-4	F-11
Q400B	I-4	A-5	R804	H-2	F-11	U900	I-4	F-12
Q410A	H-7	B-5	R805	H-2	F-11	U900A	I-5	F-12
Q410B	G-7	B-5	R806	H-2	F-11	U900D	J-2	F-12
Q610	B-6	F-9	R807	H-3	F-11	U901	I-3	F-12
Q611	D-7	F-9	R808	G-4	F-11	U910	I-7	F-12
Q700	C-7	F-9	R809	H-4	F-11	U911	I-1	F-12
Q720	B-4	E-9	R810	H-3	F-11	U911A	J-5	F-12
Q800	H-3	F-11	R811	H-3	F-11	U911B	J-6	F-12
Q801	I-3	F-11	R812	H-1	F-11	U911C	J-3	F-12
Q811	H-6	E-11	R813	I-1	F-11	U911D	J-2	F-12
Q812	E-6	E-11	R814	I-2	F-11	VR530	B-1	E-8
Q820	G-6	E-11	R815	I-2	F-11	VR630	B-1	E-8
Q900	H-4	F-11	R816	I-2	F-11	W730	A-5	D-10
Q901	H-4	F-11	R817	I-3	F-11			

POWER SUPPLY

S14 c

CIRCUIT NUMBER	SCHEMATIC LOCATION	BOARD LOCATION	CIRCUIT NUMBER	SCHEMATIC LOCATION	BOARD LOCATION
C780	C-2	A-10	R875	D-3	B-11
C840	E-6	C-10	R880	D-4	A-11
C850	I-5	C-10	R881	D-4	A-11
C860	E-2	C-10	R882	D-3	A-11
C861	G-5	B-10	R883	D-3	A-11
C870	F-5	B-10	R884	D-3	A-11
J10	J-2	E-4	U780	C-2	A-10
J11	J-5	E-4	U840	F-6	C-11
J12	G-8	F-4	U840A	F-5	C-11
J13	B-8	F-4	U840B	F-5	C-11
J14	C-8	F-5	U840C	F-5	C-11
J3	A-1	C-5	U840D	G-4	C-11
J4	A-3	A-6	U840F	D-5	C-11
J5	A-4	B-6	U850	I-5	C-11
J6	A-6	C-6	U860	E-2	C-11
J7	B-1	C-4	U860A	D-2	C-11
J8	D-1	D-4	U860B	D-2	C-11
J9	G-1	D-4	U860D	E-2	C-11
R741	E-1	C-10	U861	G-5	B-11
R770	J-3	B-10	U870	E-5	B-11
R870	E-3	B-11	W790	H-6	A-10
R871	E-3	B-11	W830	B-2	D-11
R872	C-5	B-10	W831	B-2	D-11
R873	D-3	B-11	W832	B-2	D-11
R874	D-3	B-11	W840	B-3	C-10

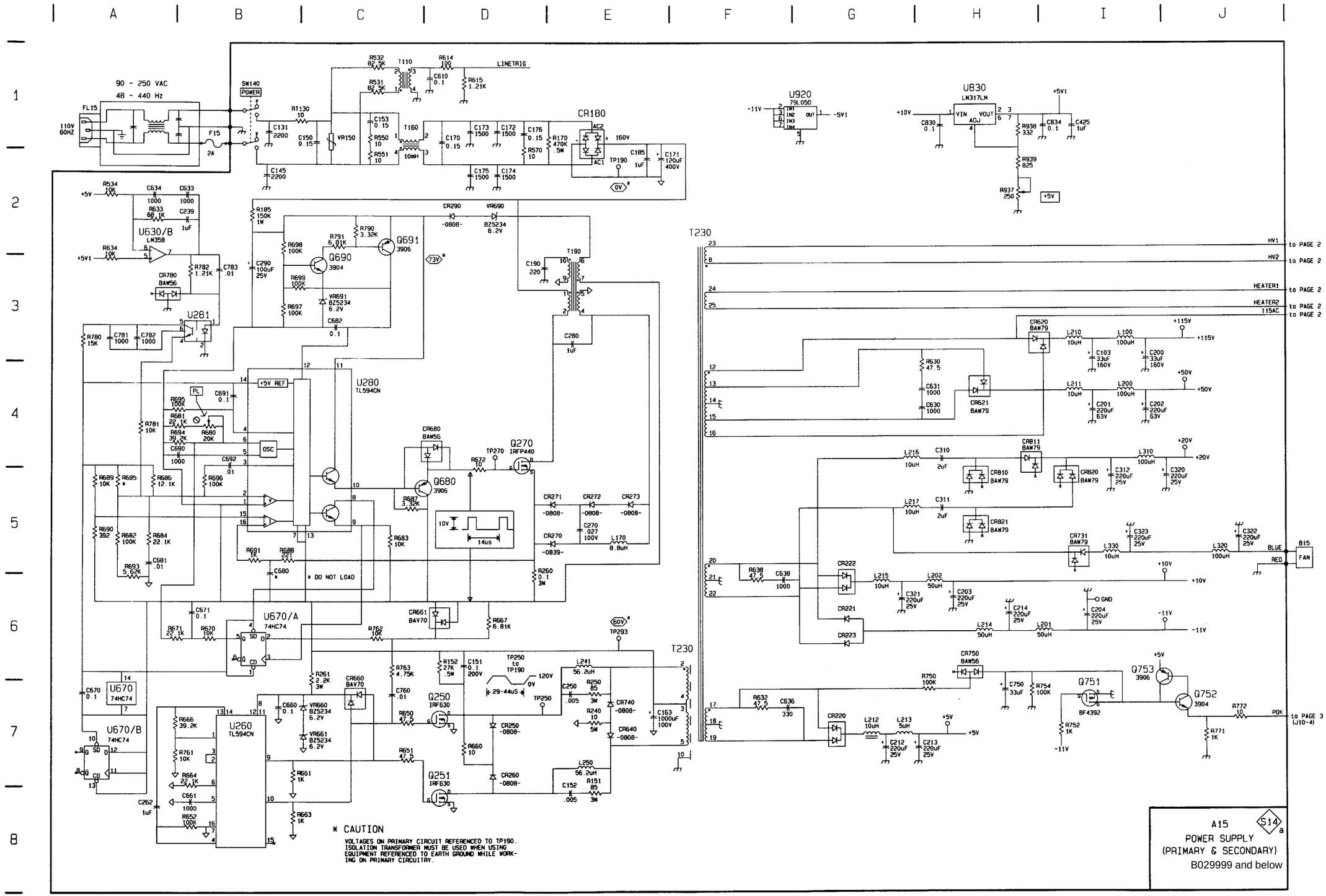

90 - 250 VAC
48 - 440 Hz
110V 60HZ
FL15
F15
2A
SW140
POWER
LINETRIG
CR180
U920
79L05D
U830
LM317LM
U630/B
LM358
U281
U280
TL594CN
U670/A
74HC74
U670
74HC74
U670/B
74HC74
U260
TL594CN
Q690
3904
Q691
3906
Q680
3906
Q270
IRFP440
Q250
IRF630
Q251
IRF630
Q751
BF4392
Q753
3906
Q752
3904
T230
T190
T160
T110
HV1
HV2
HEATER1
HEATER2
115AC
to PAGE 2
to PAGE 3 (J10-4)
B15
FAN
BLUE
RED
GND
* DO NOT LOAD
* CAUTION
VOLTAGES ON PRIMARY CIRCUIT REFERENCED TO TP190. ISOLATION TRANSFORMER MUST BE USED WHEN USING EQUIPMENT REFERENCED TO EARTH GROUND WHILE WORKING ON PRIMARY CIRCUITRY.
A15
S14 a
POWER SUPPLY
(PRIMARY & SECONDARY)
B029999 and below

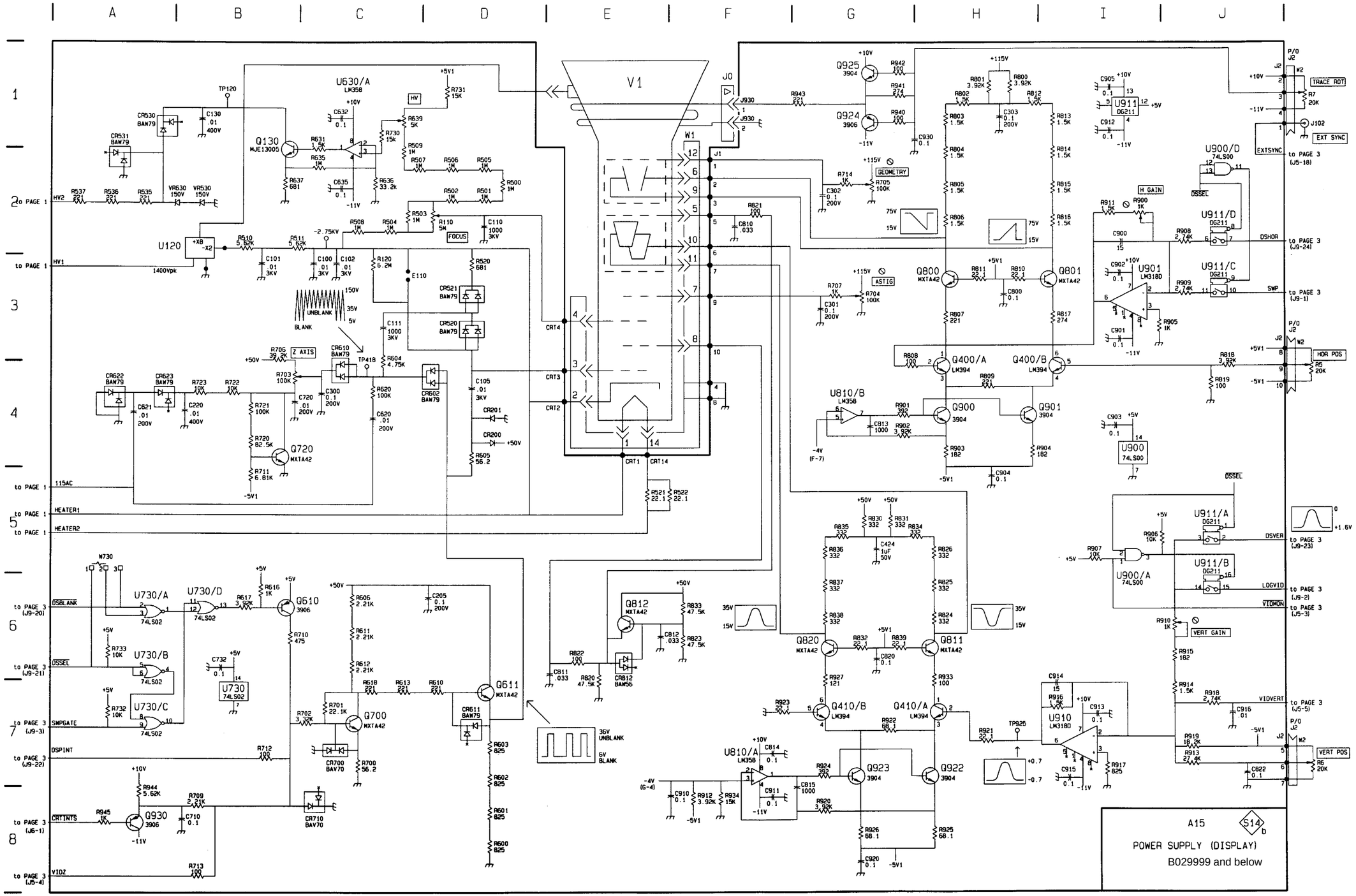
A15
S14
POWER SUPPLY (DISPLAY)
B029999 and below
V1
U630/A
LM358
Q130
MJE13005
U120
1400Vpk
U810/B
LM358
Q720
MXTA42
Q925
3904
Q924
3906
Q800
MXTA42
Q801
MXTA42
Q400/A
LM394
Q400/B
LM394
Q900
3904
Q901
3904
U911/D
DG211
U911/C
DG211
U911/A
DG211
U911/B
DG211
U900/D
74LS00
U900/A
74LS00
U900
74LS00
U901
LM318D
U910
LM318D
U730/A
74LS02
U730/D
74LS02
U730/B
74LS02
U730/C
74LS02
U730
74LS02
Q610
3906
Q611
MXTA42
Q700
MXTA42
Q930
3906
Q812
MXTA42
Q820
MXTA42
Q811
MXTA42
Q410/B
LM394
Q410/A
LM394
Q923
3904
Q922
3904
U810/A
LM358
TRACE ROT
EXT SYNC
HDR POS
VERT POS
VERT GAIN
H GAIN
GEOMETRY
ASTIG
Z AXIS
FOCUS
UNBLANK
BLANK
DSHOR
SMP
DSVER
LOGVID
VIDMON
VIDVERT
DSSEL
EXTSYNC
DSBLANK
SMPGATE
DSPINT
CRTINTS
VIDZ
115AC
HEATER1
HEATER2
to PAGE 1
to PAGE 3 (J5-18)
to PAGE 3 (J9-24)
to PAGE 3 (J9-1)
to PAGE 3 (J9-23)
to PAGE 3 (J9-2)
to PAGE 3 (J5-3)
to PAGE 3 (J5-5)
to PAGE 3 (J9-20)
to PAGE 3 (J9-21)
to PAGE 3 (J9-3)
to PAGE 3 (J9-22)
to PAGE 3 (J6-1)
to PAGE 3 (J5-4)
36V UNBLANK
6V BLANK

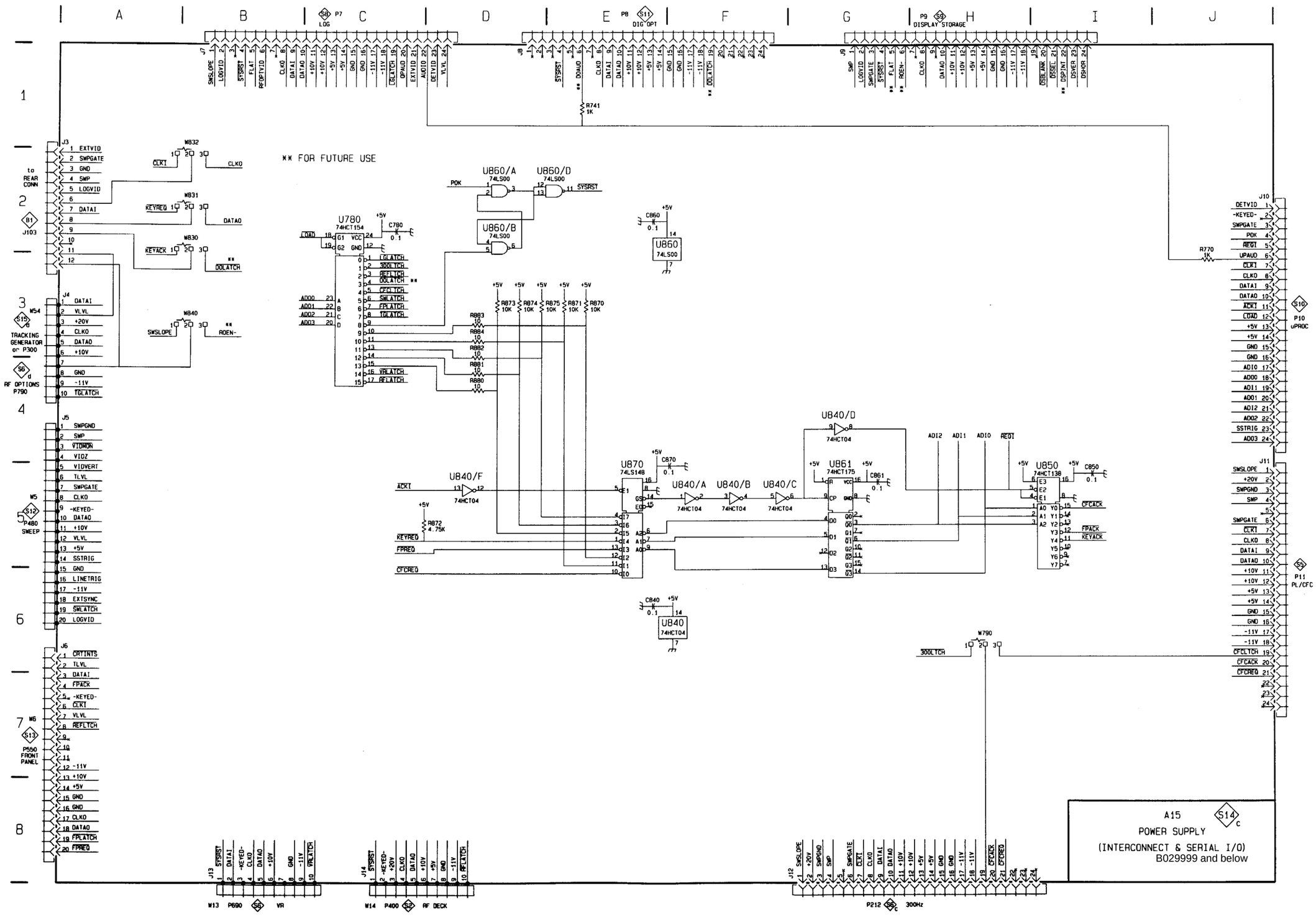

** FOR FUTURE USE
U780
74HCT154
U860/A
74LS00
U860/D
74LS00
U860/B
74LS00
U860
74LS00
U840/F
74HCT04
U840/A
74HCT04
U840/B
74HCT04
U840/C
74HCT04
U840/D
74HCT04
U840
74HCT04
U870
74LS148
U861
74HCT175
U850
74HCT138
A15
POWER SUPPLY
(INTERCONNECT & SERIAL I/O)
B029999 and below

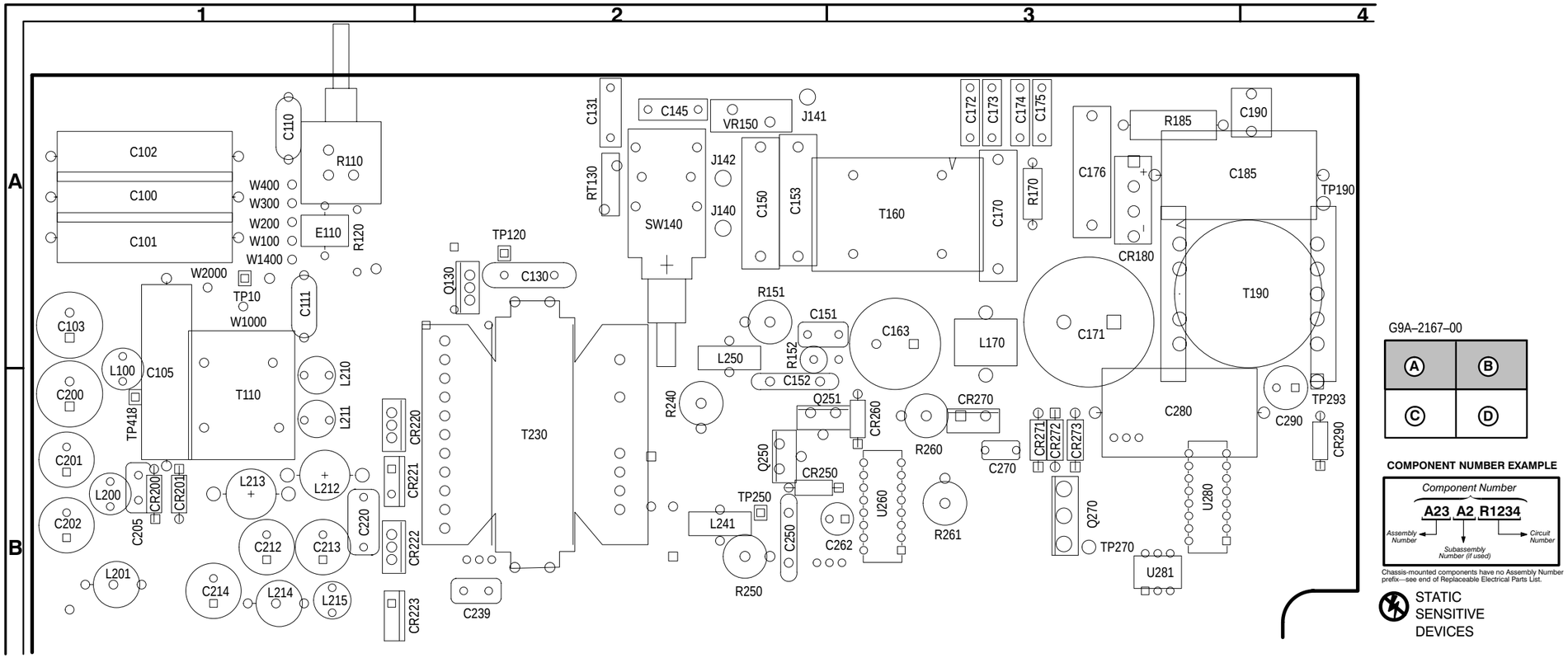

G9A–2167–00

Ⓐ	Ⓑ
Ⓒ	Ⓓ

COMPONENT NUMBER EXAMPLE

Chassis-mounted components have no Assembly Number prefix—see end of Replaceable Electrical Parts List.

STATIC SENSITIVE DEVICES

The Power Supply circuit board component location illustrations are expanded and divided into several parts to make it easier for you to locate small components. To determine which part of the whole locator diagram you are looking at, refer to the small locator key shown below. The gray block, within the larger circuit board outline, shows where that part fits in the whole locator diagram. Each part in the key is labeled with an identifying letter that appears in the figure titles under component locator diagrams.

Section of Circuit Board Shown →

Ⓐ	Ⓑ
Ⓒ	Ⓓ

A15A1 Power Supply board front (sections A, B). S/N B030000 and above

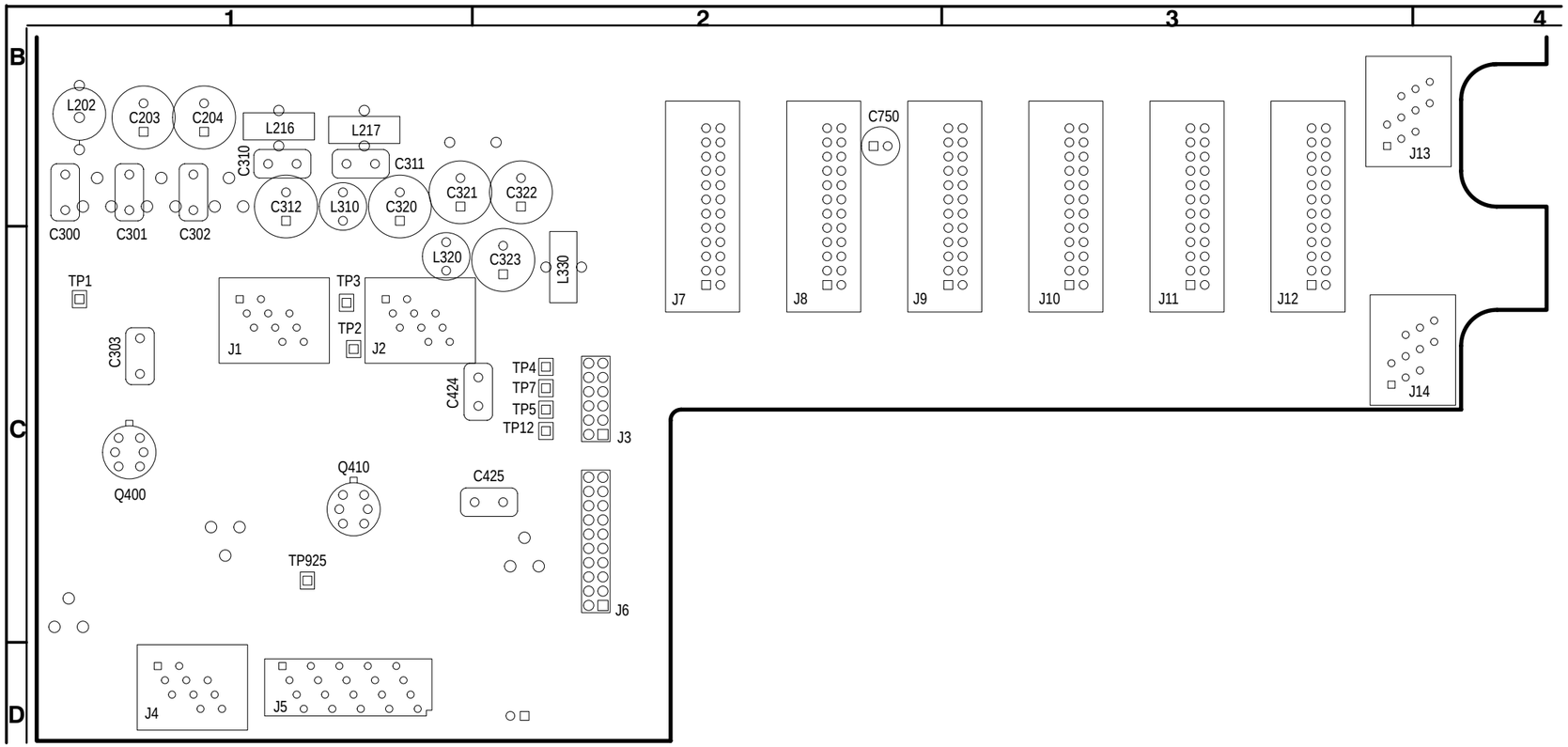

G9A–2167–00

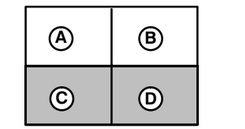

COMPONENT NUMBER EXAMPLE

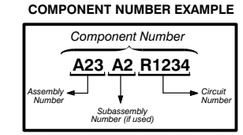

Chassis-mounted components have no Assembly Number prefix—see end of Replaceable Electrical Parts List.

STATIC SENSITIVE DEVICES

A15A1 Power Supply board front (sections C, D). S/N B030000 and above

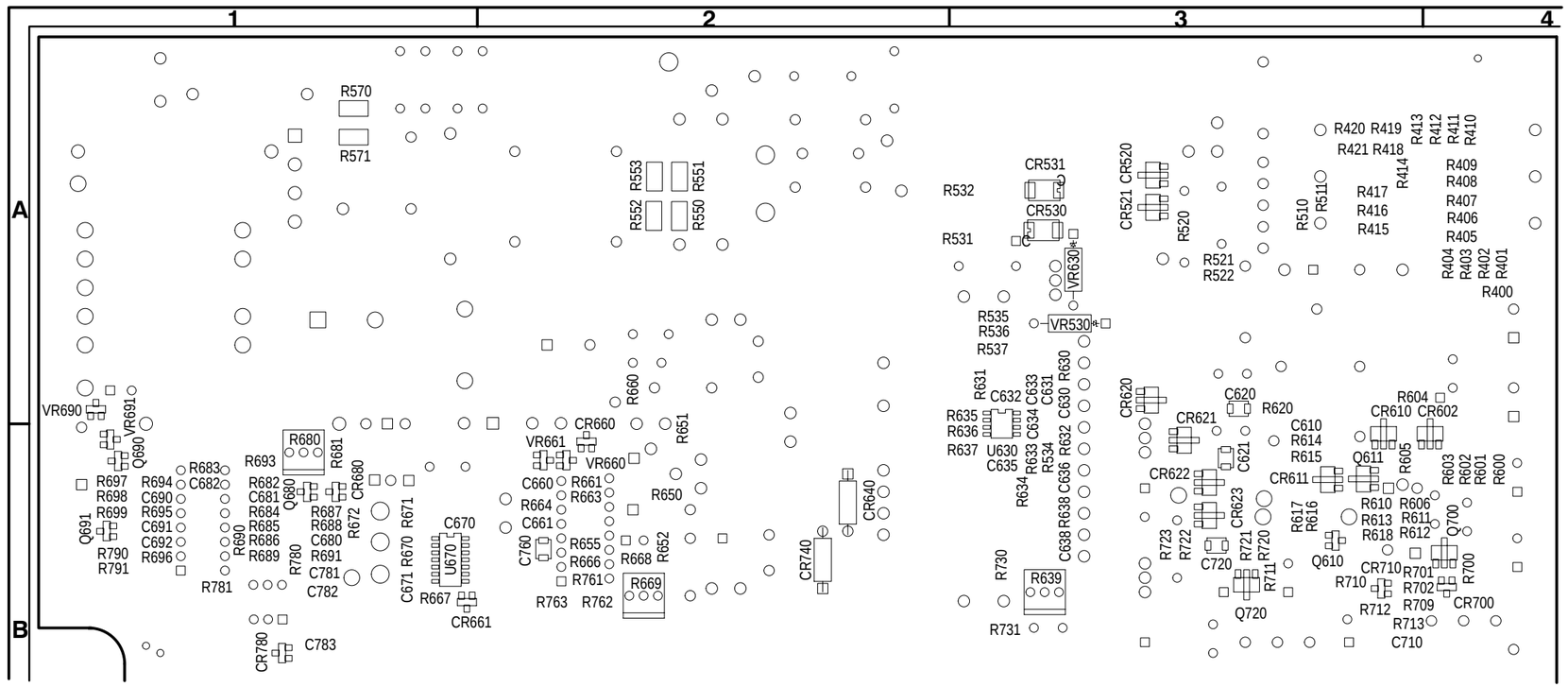

G9A-2167-00

Ⓐ	Ⓑ
Ⓒ	Ⓓ

COMPONENT NUMBER EXAMPLE

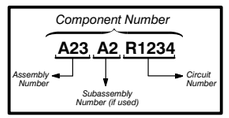

Chassis-mounted components have no Assembly Number prefix—see end of Replaceable Electrical Parts List.

STATIC SENSITIVE DEVICES

A15A1 Power Supply board back (sections A, B). S/N B030000 and above

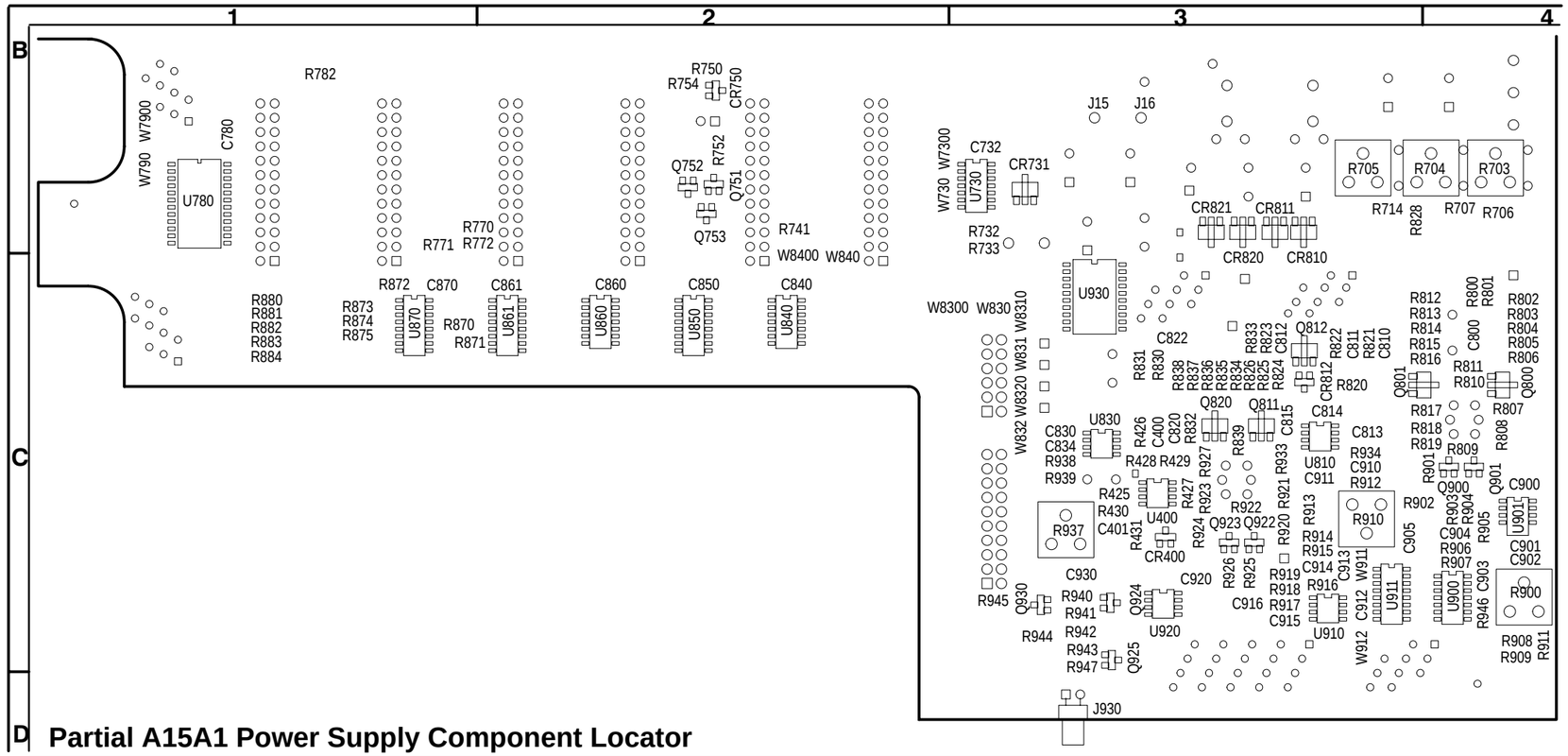

G9A-2167-00

A	B
C	D

COMPONENT NUMBER EXAMPLE

Component Number

A23 A2 R1234

Assembly Number — Subassembly Number (if used) — Circuit Number

Chassis-mounted components have no Assembly Number prefix—see end of Replaceable Electrical Parts List.

STATIC SENSITIVE DEVICES

Partial A15A1 Power Supply Component Locator

CIRCUIT NUMBER	BOARD LOCATION	SCHEM LOCATION	CIRCUIT NUMBER	BOARD LOCATION	SCHEM LOCATION	CIRCUIT NUMBER	BOARD LOCATION	SCHEM LOCATION	CIRCUIT NUMBER	BOARD LOCATION	SCHEM LOCATION	CIRCUIT NUMBER	BOARD LOCATION	SCHEM LOCATION	CIRCUIT NUMBER	BOARD LOCATION	SCHEM LOCATION	CIRCUIT NUMBER	BOARD LOCATION	SCHEM LOCATION	CIRCUIT NUMBER	BOARD LOCATION	SCHEM LOCATION
C100	A1	5D3	C176	A3	1A5	C302	B1	5B4	C635*	B3	5A3	C783*	B1	1C5	C903*	C4	2D6	CR260	A2	2C2	CR661*	B1	2A2
C101	A1	5D2	C185	A3	1A6	C303	C1	4B5	C636*	B3	2D4	C800*	C4	4C5	C904*	C3	4D5	CR270	A3	1D6	CR680*	B1	1C4
C102	A1	5D3	C190	A3	1B6	C310	B1	2B5	C638*	B3	2C4	C810*	C3	5B3	C905*	C3	3C3	CR271	B3	1D6	CR700*	B3	4B4
C103	A1	2A5	C200	A1	2A5	C311	B1	2B5	C660*	B2	2C1	C811*	C3	5C3	C910*	C3	3C4	CR272	A3	1C6	CR710*	B3	4B3
C105	A1	5C4	C201	B1	2B5	C312	B1	2B5	C661*	B2	2C1	C812*	C3	5B2	C911*	C3	3C4	CR273	B3	1C6	CR731*	B3	2B5
C110	A1	5C3	C202	B1	2B5	C320	B1	2B6	C670*	B1	2A2	C813*	C3	4D4	C912*	C3	3D3	CR290	B4	1B6	CR740*	B2	2B3
C111	A1	5D4	C203	B1	2C5	C321	B1	2C5	C671*	B1	2A3	C814*	C3	3B4	C913*	C3	2C5	CR400*	C3	6D2	CR750*	B2	2C4
C130	A2	5A3	C204	B1	2C6	C322	B2	2B6	C680*	B1	1D2	C815*	C3	3C4	C914*	C3	3B3	CR520*	A3	5D4	CR780*	B1	1C4
C131	A2	1A3	C205	B1	4A5	C323	B1	2B6	C681*	B1	1D1	C820*	C3	3B5	C915*	C3	2C6	CR521*	A3	5D4	CR810*	B3	2B5
C145	A2	1B3	C212	B1	2D4	C400*	C3	6D2	C682*	B1	1C2	C822*	C3	3B2	C916*	C3	3B2	CR530*	A3	5A3	CR811*	B3	2B5
C150	A2	1A3	C213	B1	2D5	C401*	C3	6D2	C690*	B1	1C2	C830*	C3	2D2	C920*	C3	3C5	CR531*	A3	5A2	CR812*	C3	5B2
C151	A2	2B2	C214	B1	2C5	C424	C1	3A5	C691*	B1	1D2	C834*	C3	2D3	C930*	C3	5A4	CR602*	A3	5C3	CR820*	B3	2B5
C152	A2	2C3	C220	B1	5D2	C425	C1	2D3	C692*	B1	1C2	C840*	C2	2D5	CR180	A3	1A5	CR610*	A3	5C3	CR821*	B3	2B5
C153	A2	1A4	C239	B2	1B4	C610*	A3	1A4	C710*	B3	4B3	C850*	C2	2D6	CR200	B1	5D4	CR611*	B3	4A5	E110	A1	5D5
C163	A3	2B3	C250	B2	2B3	C620*	A3	5C2	C720*	B3	5D2	C860*	C2	2D5	CR201	B1	5C4	CR620*	A3	2A4	J1	C1	5A5
C170	A3	1A4	C262	B2	2D1	C621*	B3	5C1	C732*	B2	2D6	C861*	C1	2D6	CR220	A1	2D4	CR621*	A3	2B4	J1	C1	5B5
C171	A3	1A6	C270	B3	1C6	C630*	A3	2B4	C750	B2	2D5	C870*	C1	2D5	CR221	B1	2C4	CR622*	B3	5C2	J1	C1	5B5
C172	A3	1A5	C280	A3	1C5	C631*	A3	2B4	C760*	B2	2B2	C900*	C4	4C3	CR222	B1	2C5	CR623*	B3	5D1	J1	C1	5C5
C173	A3	1A4	C290	A4	1B1	C632*	A3	5A3	C780*	B1	2D5	C901*	C4	4D3	CR223	B1	2C4	CR640*	B2	2C3	J10	B3	8C1
C174	A3	1B5	C300	B1	5D3	C633*	A3	1B4	C781*	B1	1D4	C902*	C4	4D3	CR250	B2	2B2	CR660*	A2	2C2	J10	B3	8C1
C175	A3	1B4	C301	B1	5B4	C634*	A3	1B4	C782*	B1	1D4												

***Asterisks indicate components located on the back of the board.**

A15A1 Power Supply board back (sections C, D) and partial component locator. S/N B030000 and above

A15A1 Power Supply Component Locator (cont.)

CIRCUIT NUMBER	BOARD LOCATION	SCHEM LOCATION	CIRCUIT NUMBER	BOARD LOCATION	SCHEM LOCATION	CIRCUIT NUMBER	BOARD LOCATION	SCHEM LOCATION	CIRCUIT NUMBER	BOARD LOCATION	SCHEM LOCATION	CIRCUIT NUMBER	BOARD LOCATION	SCHEM LOCATION	CIRCUIT NUMBER	BOARD LOCATION	SCHEM LOCATION	CIRCUIT NUMBER	BOARD LOCATION	SCHEM LOCATION	CIRCUIT NUMBER	BOARD LOCATION	SCHEM LOCATION
J2	C1	3B1	L213	B1	2D4	R404*	A3	5A1	R614*	A3	1A4	R703*	B4	5C3	R818*	C3	4D6	R921*	C3	3B4	U780*	B1	6A1
J2	C1	4C6	L214	B1	2C4	R405*	A4	5B1	R615*	B3	1A4	R704*	B3	5B3	R819*	C3	4D5	R922*	C3	3B5	U810*	C3	3B4
J2	C1	4D6	L215	B1	2C5	R406*	A4	5B1	R616*	B3	4A3	R705*	B3	5B4	R820*	C3	5B3	R923*	C3	3B5	U810*	C3	4D4
J2	C1	5A4	L216	B1	2B4	R407*	A4	5B1	R617*	B3	4A3	R706*	B4	5C3	R821*	C3	5B3	R924*	C3	3C4	U830*	C3	2D2
J3	C2	7A1	L217	B1	2B4	R408*	A4	5B1	R618*	B3	4A4	R707*	B3	5B4	R822*	C3	5B3	R925*	C3	3C5	U840*	C2	6C2
J4	C1	7B1	L241	B2	2B3	R409*	A4	5B1	R620*	A3	5C2	R709*	B3	4A3	R823*	C3	5B2	R926*	C3	3C5	U840*	C2	6C3
J4	C1	7C1	L250	A2	2C3	R410*	A4	5B1	R630*	A3	2B4	R710*	B3	4A3	R824*	C3	3A4	R927*	C3	3B5	U840*	C2	6C4
J5	C1	7C1	L310	B1	2B6	R411*	A3	5B2	R631*	A2	5A3	R711*	B3	5D2	R825*	C3	3A4	R933*	C3	3B4	U840*	C2	6D5
J5	C1	7D1	L320	B1	2B6	R412*	A3	5B2	R632*	A3	2D4	R712*	B3	4B4	R826*	C3	3A4	R934*	C3	3C3	U850*	C2	6D6
J6	C2	7C4	L330	B2	2B5	R413*	A3	5B2	R633*	B3	1B4	R713*	B3	4B3	R828*	B3	5B3	R937*	C3	2D2	U860*	C2	6A3
J6	C2	7C4	Q130	A2	5A3	R414*	A3	5B2	R634*	B3	1B4	R714*	B3	5B4	R830*	C3	3A5	R938*	C3	2D2	U861*	C1	6C5
J6	C2	7C4	Q250	B2	2B2	R415*	A3	5C2	R635*	A2	5A3	R720*	B3	5D2	R831*	C3	3A4	R939*	C3	2D2	U870*	C1	6C3
J6	C2	7D4	Q251	A2	2C2	R416*	A3	5C2	R636*	A2	5B2	R721*	B3	5D2	R832*	C3	3B5	R940*	C3	5A4	U900*	C3	3D4
J6	C2	7D4	Q270	B3	1C5	R417*	A3	5C2	R637*	B2	5B3	R722*	B3	5D2	R833*	C3	5B2	R941*	C3	5A4	U900*	C3	4C2
J6	C2	7D4	Q400	C1	4D4	R418*	A3	5C2	R638*	B3	2C4	R723*	B3	5D2	R834*	C3	3A4	R942*	C3	5A4	U900*	C3	6D3
J7	B2	7A6	Q400	C1	4D5	R419*	A3	5C2	R639*	B3	5A2	R730*	B3	5A2	R835*	C3	3A5	R943*	C3	5A5	U901*	C4	4D3
J7	B2	7A6	Q410	C1	3B5	R420*	A3	5D2	R650*	B2	2B2	R731*	B3	5A2	R836*	C3	3A5	R944*	C3	4A3	U910*	C3	3B3
J7	B2	7B6	Q610*	B3	4A3	R421*	A3	5D2	R651*	A2	2C2	R732*	B3	4A2	R837*	C3	3A5	R945*	C3	4B2	U911*	C3	3C2
J7	B2	7B6	Q611*	B3	4A5	R425*	C3	6D1	R652*	B2	2D1	R733*	B3	4A2	R838*	C3	3A5	R946*	C4	6D3	U911*	C3	3D3
J8	B2	7C6	Q680*	B1	1C4	R426*	C3	6D1	R655*	B2	2D1	R741*	B2	7C6	R839*	C3	3B5	R947*	C3	5A5	U911*	C3	4C2
J8	B2	7C6	Q690*	B1	1B2	R427*	C3	6D1	R660*	A2	2B2	R750*	B2	2D4	R870*	C1	6B3	RT130	A2	1A3	U911*	C3	4D1
J8	B2	7C6	Q691*	B1	1B3	R428*	C3	6D1	R661*	B2	2C2	R752*	B2	2D5	R871*	C1	6B3	SW140	A2	1A2	U920*	C3	2D3
J8	B2	7D6	Q700*	B3	4A4	R429*	C3	6D2	R663*	B2	2C2	R754*	B2	2D5	R872*	C1	6C3	TP1	B1	2A5	U930*	C3	7B4
J8	B2	7D6	Q720*	B3	5D3	R430*	C3	6D2	R664*	B2	2C1	R761*	B2	2D1	R873*	C1	6C3	TP2	C1	2A5	VR150	A2	1A3
J9	B2	8A1	Q751*	B2	2D6	R431*	C3	6D2	R666*	B2	2D1	R762*	B2	2A2	R874*	C1	6C3	TP3	C1	2B6	VR530*	A3	5A2
J9	B2	8A1	Q752*	B2	2C6	R510*	A3	5D2	R667*	B1	2A2	R763*	B2	2B2	R875*	C1	6B3	TP4	C2	2C5	VR630*	A3	5A2
J9	B2	8B1	Q753*	B2	2C6	R511*	A3	5D2	R668*	B2	2D1	R770*	B1	8C1	R880*	C1	6C2	TP5	C2	2C6	VR660*	B2	2C2
J10	B3	8D1	Q800*	C4	4C4	R520*	A3	5D4	R669*	B2	2D1	R771*	B1	2D6	R881*	C1	6C2	TP7	C2	2D5	VR661*	B2	2C2
J10	B3	8D1	Q801*	C3	4C5	R521*	A3	5D6	R670*	B1	2A2	R772*	B1	2D6	R882*	C1	6B2	TP10	A1	5D3	VR690*	A1	1B6
J11	B3	8A6	Q811*	C3	3B4	R522*	A3	5D6	R671*	B1	2A3	R780*	B1	1D3	R883*	C1	6B2	TP12	C2	2C6	VR691*	A1	1B2
J11	B3	8A6	Q812*	C3	5B3	R531*	A2	1A3	R672*	B1	1C5	R781*	B1	1D4	R884*	C1	6B2	T110	A1	1A4	W100	A1	5C6
J11	B3	8B6	Q820*	C3	3B5	R532*	A2	1A3	R680*	B1	1D2	R782*	B1	1C5	R900*	C4	4C3	T160	A3	1A4	W200	A1	5C5
J11	B3	8B6	Q900*	C3	4D4	R534*	B3	1B4	R681*	B1	1D2	R790*	B1	1B2	R901*	C3	4D4	T190	A3	1B6	W300	A1	5C5
J12	B3	8C6	Q901*	C4	4D5	R535*	A3	5A2	R682*	B1	1C1	R791*	B1	1B2	R902*	C3	4D4	T230	B2	2B3	W400	A1	5C5
J12	B3	8C6	Q922*	C3	3C5	R536*	A3	5A1	R683*	B1	1C3	R800*	C4	4B5	R903*	C4	4D4	TP120	A2	5A3	W730*	B2	4A2
J12	B3	8D6	Q923*	C3	3C5	R537*	A3	5A1	R684*	B1	1C1	R801*	C4	4B4	R904*	C4	4D5	TP190	A4	1A5	W790*	B1	8D5
J12	B3	8D6	Q924*	C3	5A5	R550*	A2	1A4	R685*	B1	1C1	R802*	C4	4B4	R905*	C4	4D2	TP250	B2	2B2	W830*	C3	7B3
J13	B3	8C4	Q925*	C3	5A5	R551*	A2	1A4	R686*	B1	1C1	R803*	C4	4B4	R906*	C3	3D4	TP270	B3	1C5	W831*	C3	7B3
J14	C3	8D4	Q930*	C3	4B3	R552*	A2	1A4	R687*	B1	1C4	R804*	C4	4C4	R907*	C3	3D3	TP293	A4	2A2	W832*	C3	7A3
J15*	B3	2C6	R110	A1	5C2	R553*	A2	1A4	R688*	B1	1D2	R805*	C4	4C4	R908*	C4	4B2	TP418	A1	5C3	W840*	B2	7C3
J16*	B3	2C6	R120	A1	5D5	R570*	A1	1A5	R689*	B1	1C1	R806*	C4	4C4	R909*	C4	4D2	TP925	C1	3B4	W911*	C3	3C2
J140	A2	1A2	R151	A2	2C3	R571*	A1	1A5	R690*	B1	1D1	R807*	C4	4C4	R910*	C3	3C3	U260	B3	2C1	W912*	C3	4B2
J141	A2	1A2	R152	A2	2B2	R600*	B4	4B5	R691*	B1	1D2	R808*	C4	4D4	R911*	C4	4C3	U280	B3	1C2	W1000	A1	2A6
J142	A2	1B2	R170	A3	1A5	R601*	B4	4B5	R693*	B1	1C1	R809*	C4	4D5	R912*	C3	3C3	U281	B3	1D5	W1400	A1	5C6
J930*	D3	5A5	R185	A3	1B5	R602*	B4	4A5	R694*	B1	1C2	R810*	C4	4C5	R913*	C3	3B2	U400*	C3	6D1	W2000	A1	5D1
L100	A1	2A5	R240	A2	2B3	R603*	B3	4A5	R695*	B1	1D2	R811*	C4	4C5	R914*	C3	3B3	U630*	A3	1B4	W7300*	B2	4A2
L170	A3	1C6	R250	B2	2B3	R604*	A3	5D3	R696*	B1	1C2	R812*	C3	4B5	R915*	C3	3C3	U630*	A3	5A3	W7900*	B1	8D5
L200	B1	2B5	R260	A3	1D5	R605*	B3	5C4	R697*	B1	1B2	R813*	C3	4B5	R916*	C3	3B3	U670*	B1	2A2	W8300*	C2	7B3
L201	B1	2C5	R261	B3	2B1	R606*	B3	4A4	R698*	B1	1B2	R814*	C3	4C5	R917*	C3	3B3	U670*	B1	2A3	W8310*	C3	7A3
L202	B1	2C5	R400*	A4	5A2	R610*	B3	4A5	R699*	B1	1B2	R815*	C3	4C5	R918*	C3	3B3	U730*	B2	4A2	W8320*	C3	7A3
L210	A1	2A5	R401*	A4	5A2	R611*	B3	4A4	R700*	B4	4B4	R816*	C3	4C5	R919*	C3	3B2	U730*	B2	4A2	W8400*	B2	7B3
L211	A1	2B4	R402*	A4	5A2	R612*	B3	4A4	R701*	B3	4A4	R817*	C3	4C5	R920*	C3	3C4	U730*	B2	4A3			
L212	B1	2D4	R403*	A4	5A2	R613*	B3	4A5	R702*	B3	4A4												

***Asterisks indicate components located on the back of the board.**

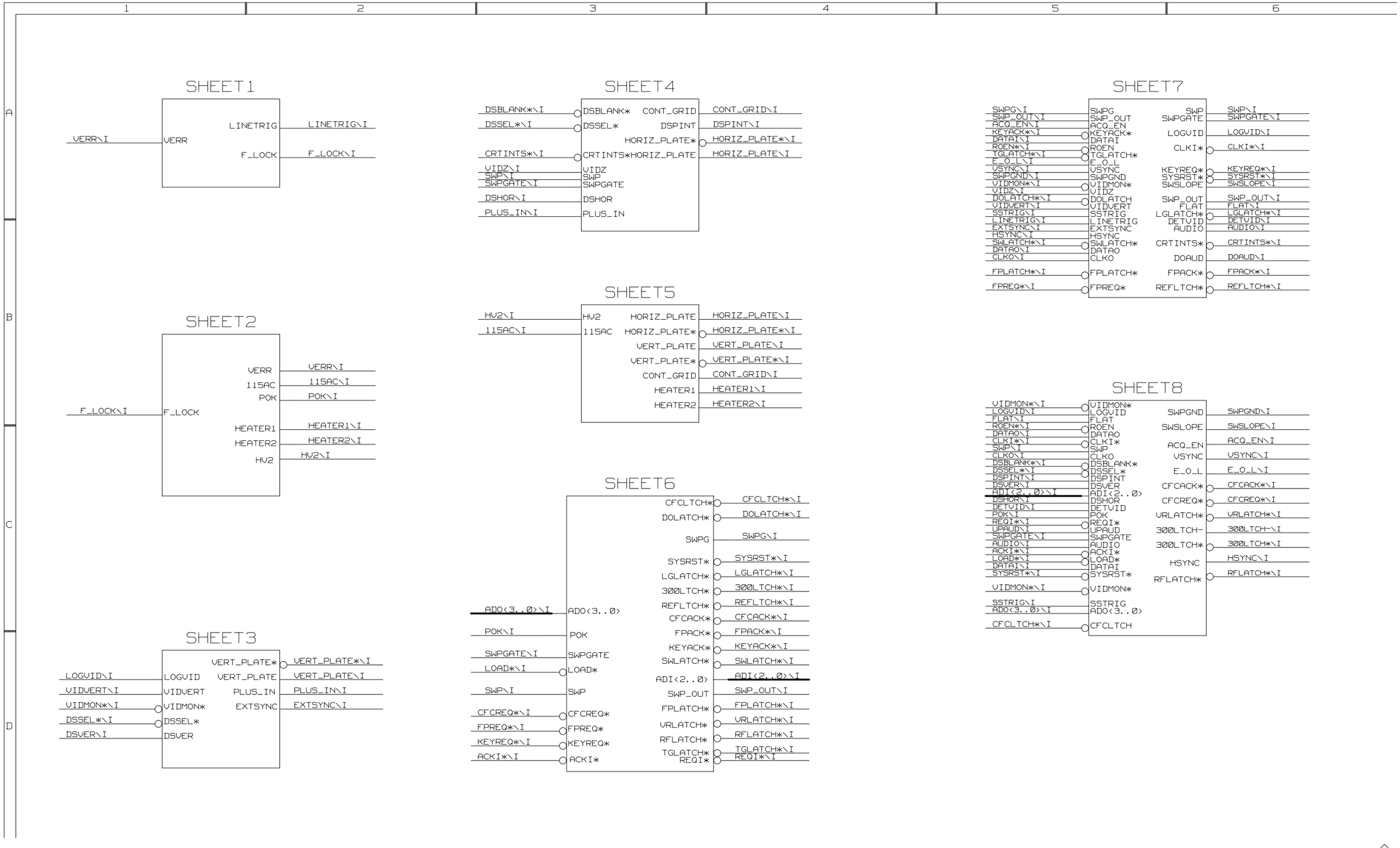

SIGNAL INTERCONNECT
POWER SUPPLY BOARD

A15A1 0

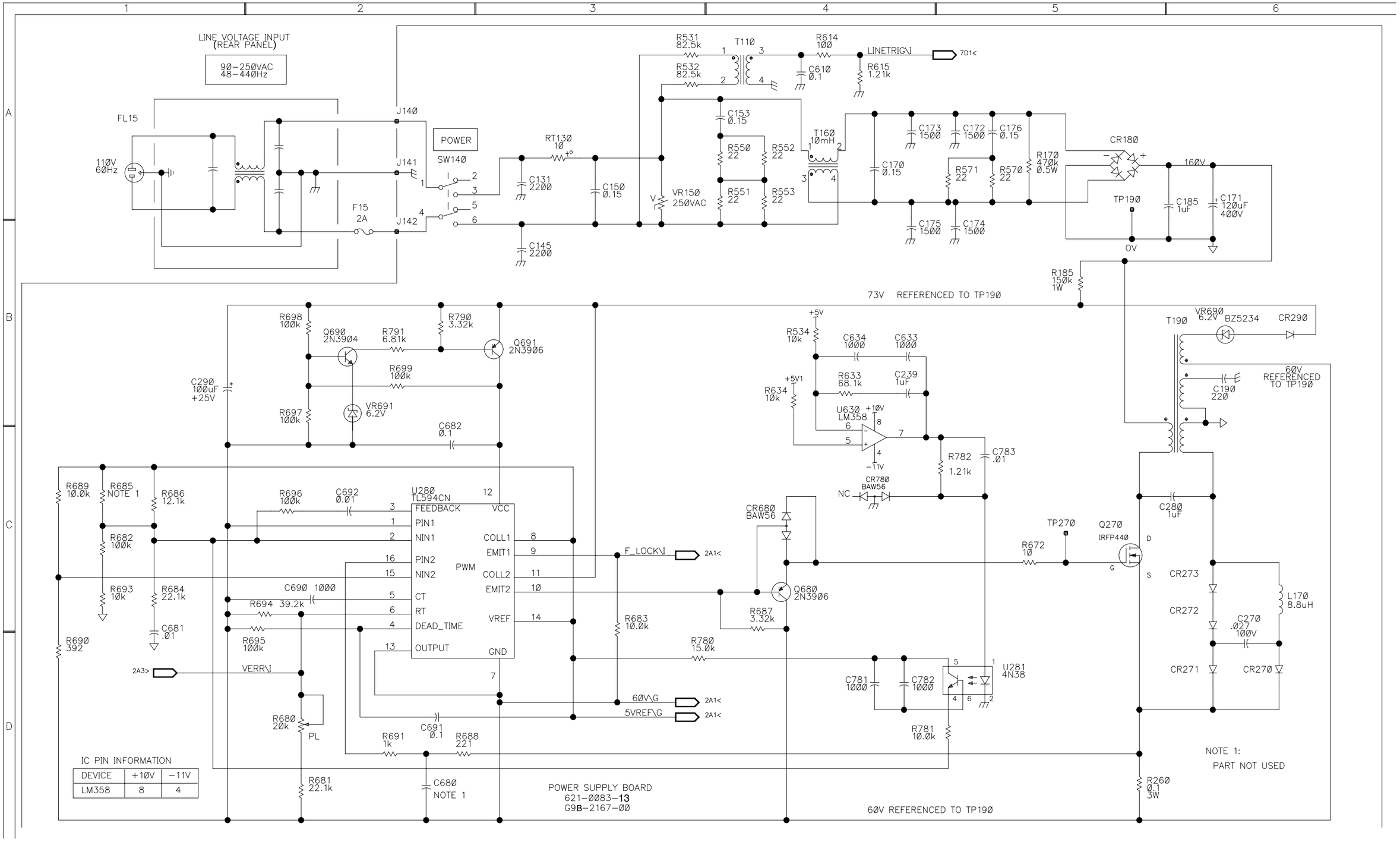

PWM/LINE FILTER A15A1 1 OF:9

S/N B030000 and above

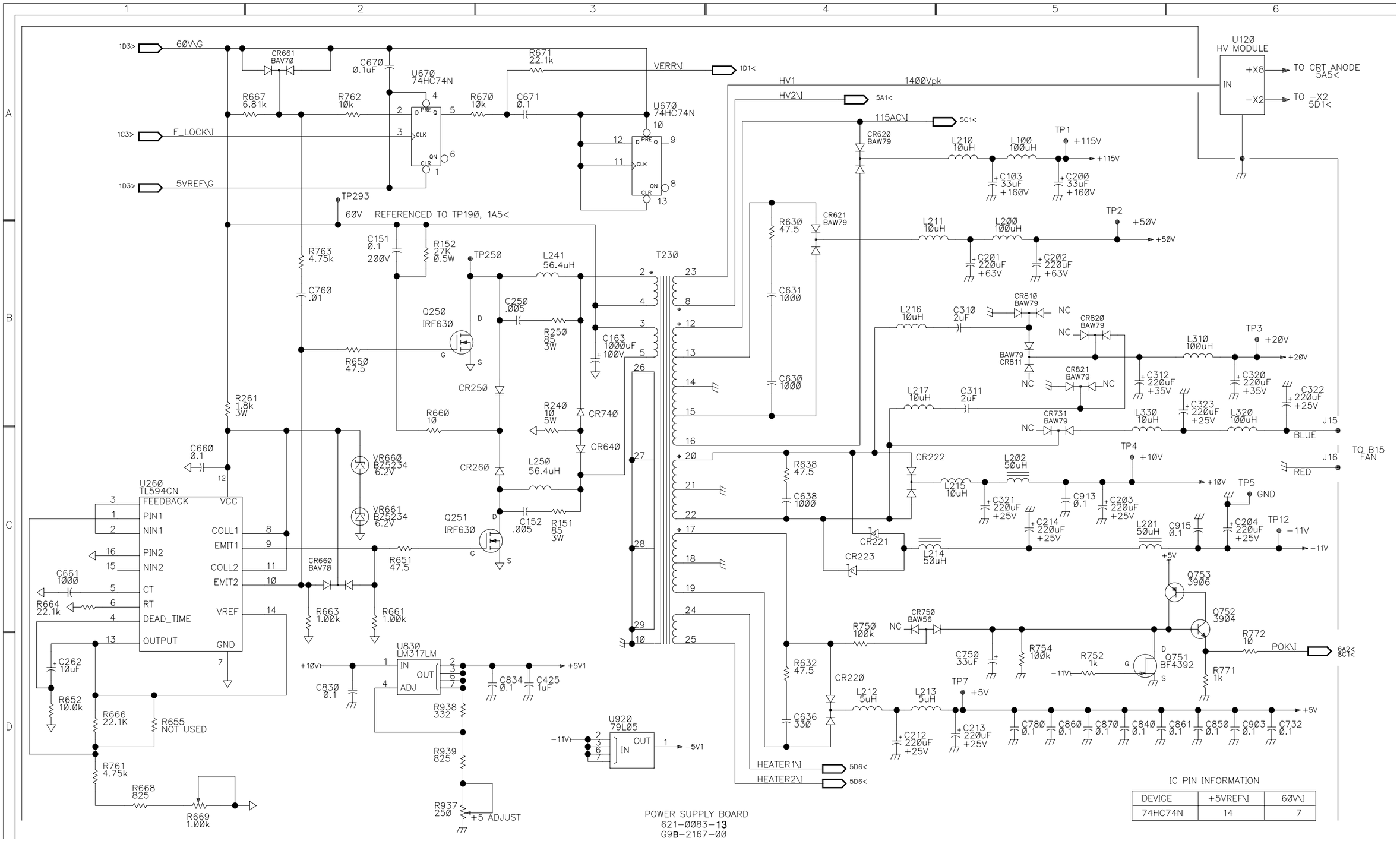

IC PIN INFORMATION

DEVICE	+5VREF\I	60V\I
74HC74N	14	7

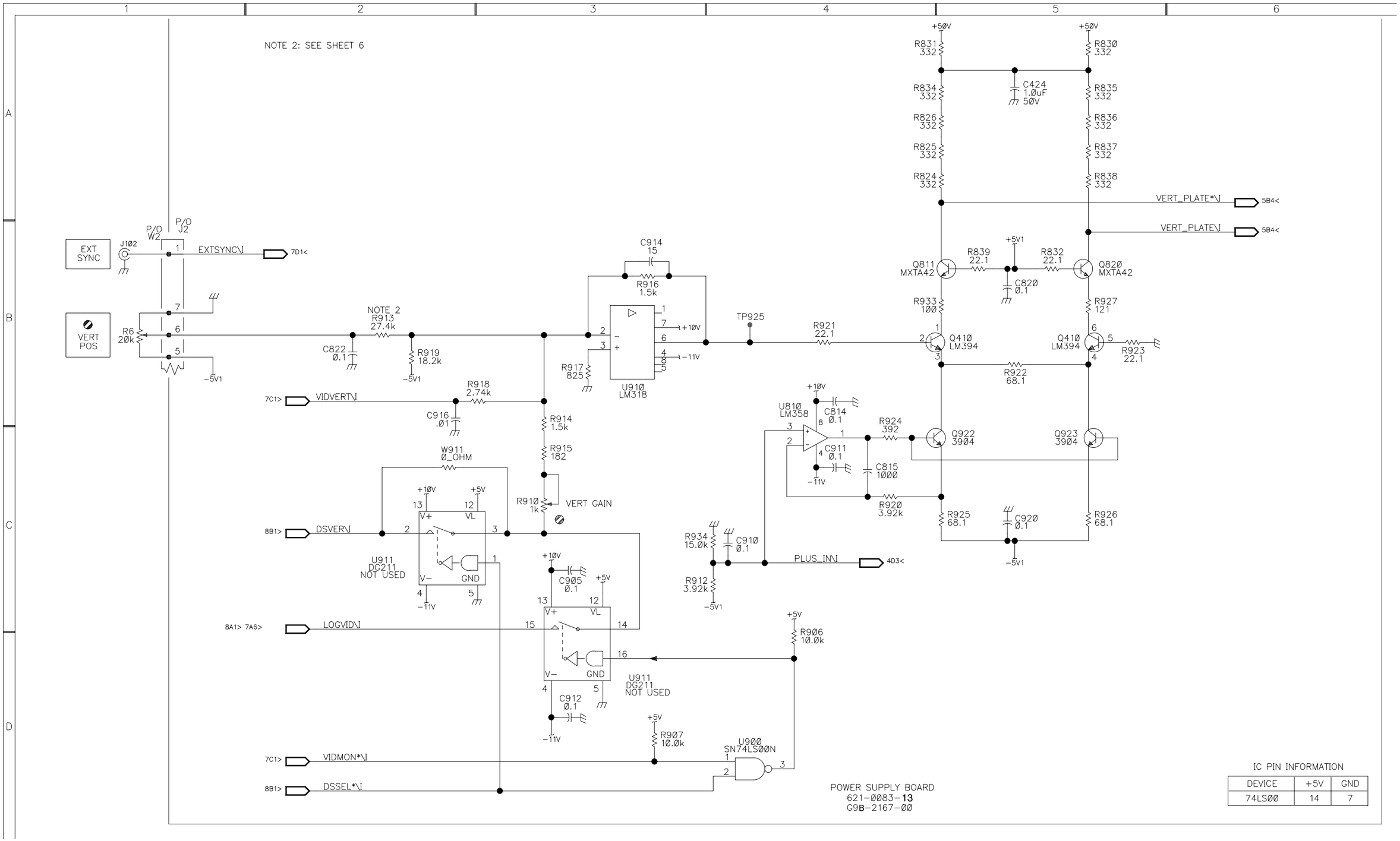

IC PIN INFORMATION

DEVICE	+5V	GND
74LS00	14	7

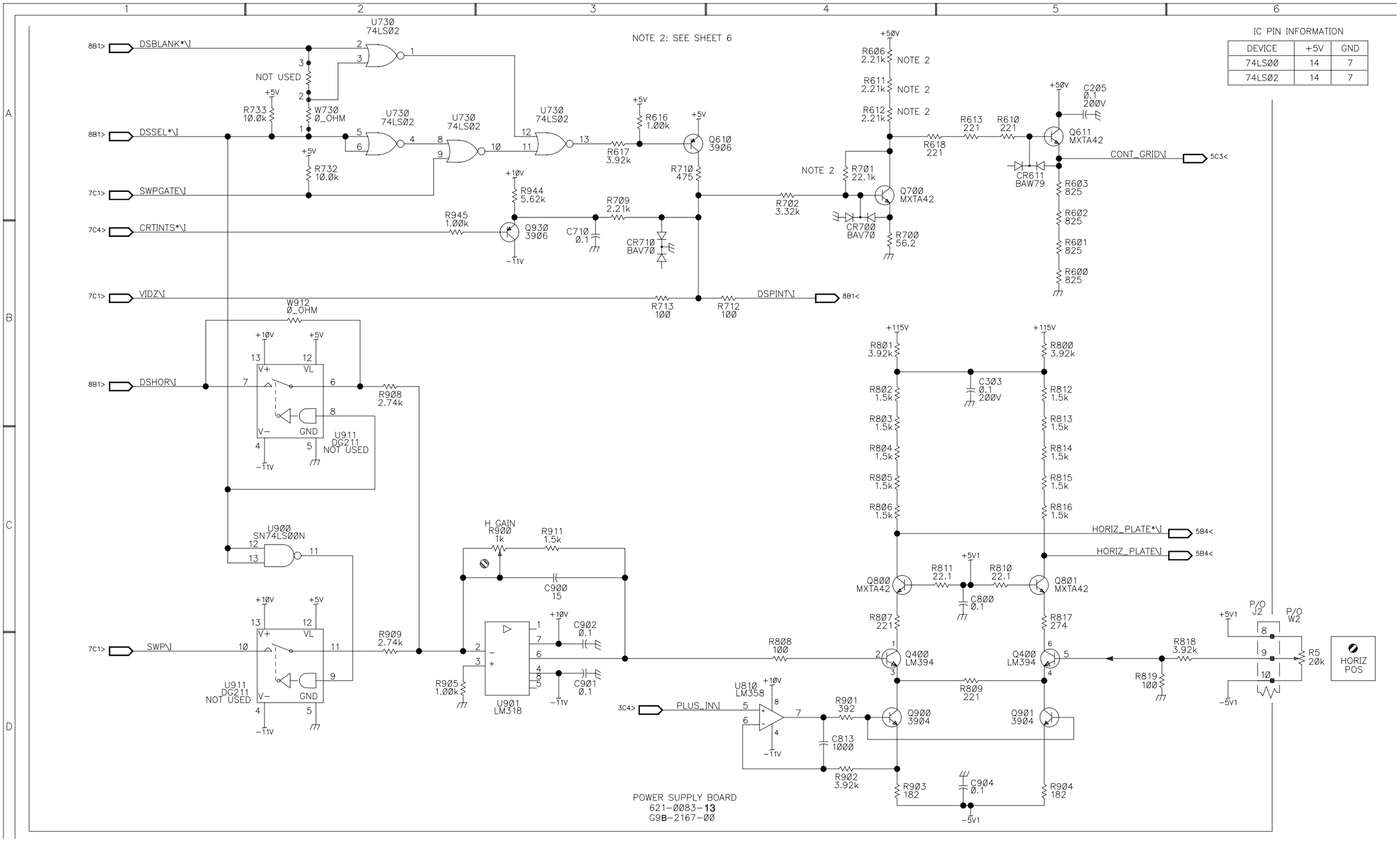

IC PIN INFORMATION

DEVICE	+5V	GND
74LS00	14	7
74LS02	14	7

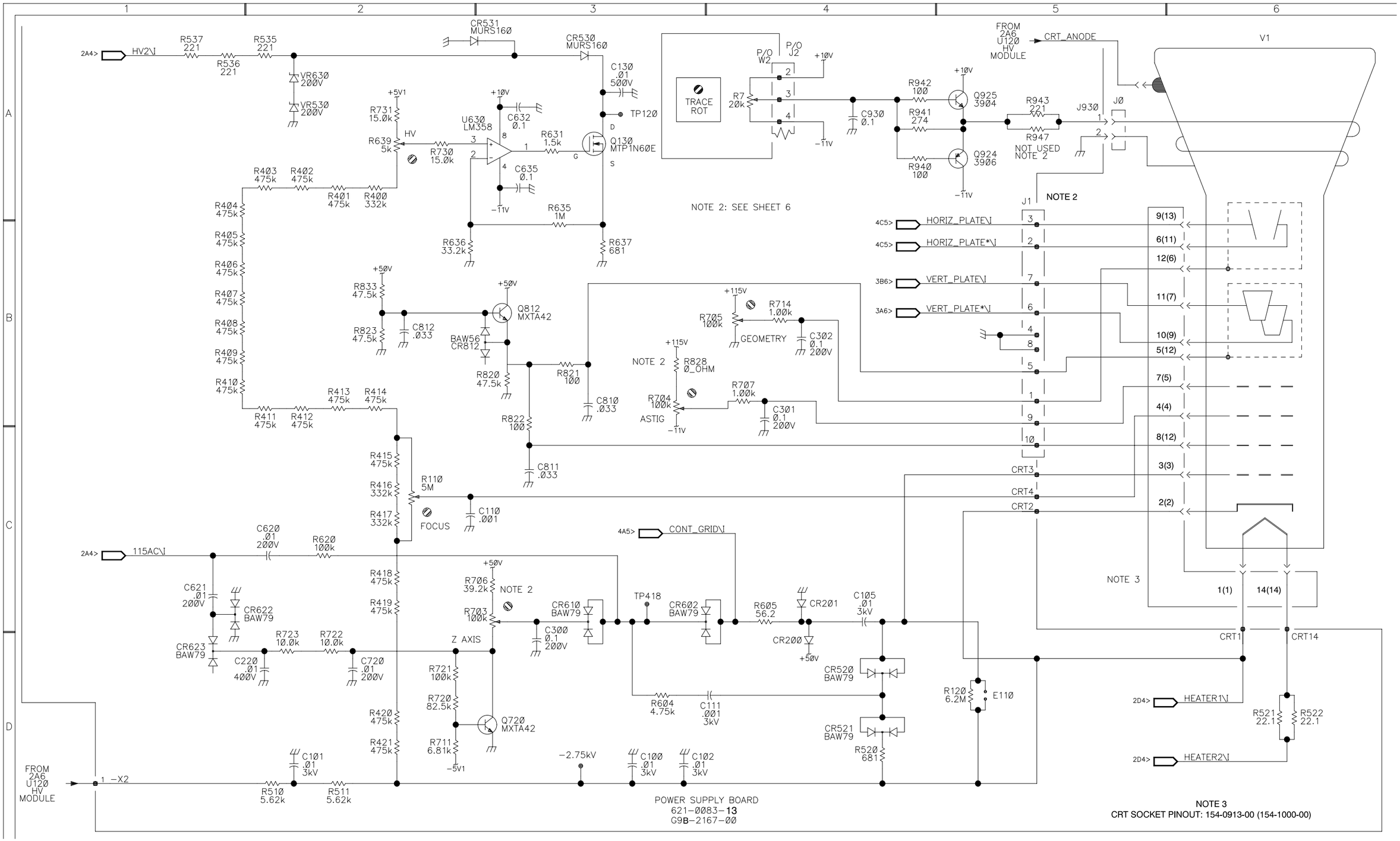

HV REGULATOR AND CRT BIASING

S/N B030000 and above

A15A1 5

OF:9

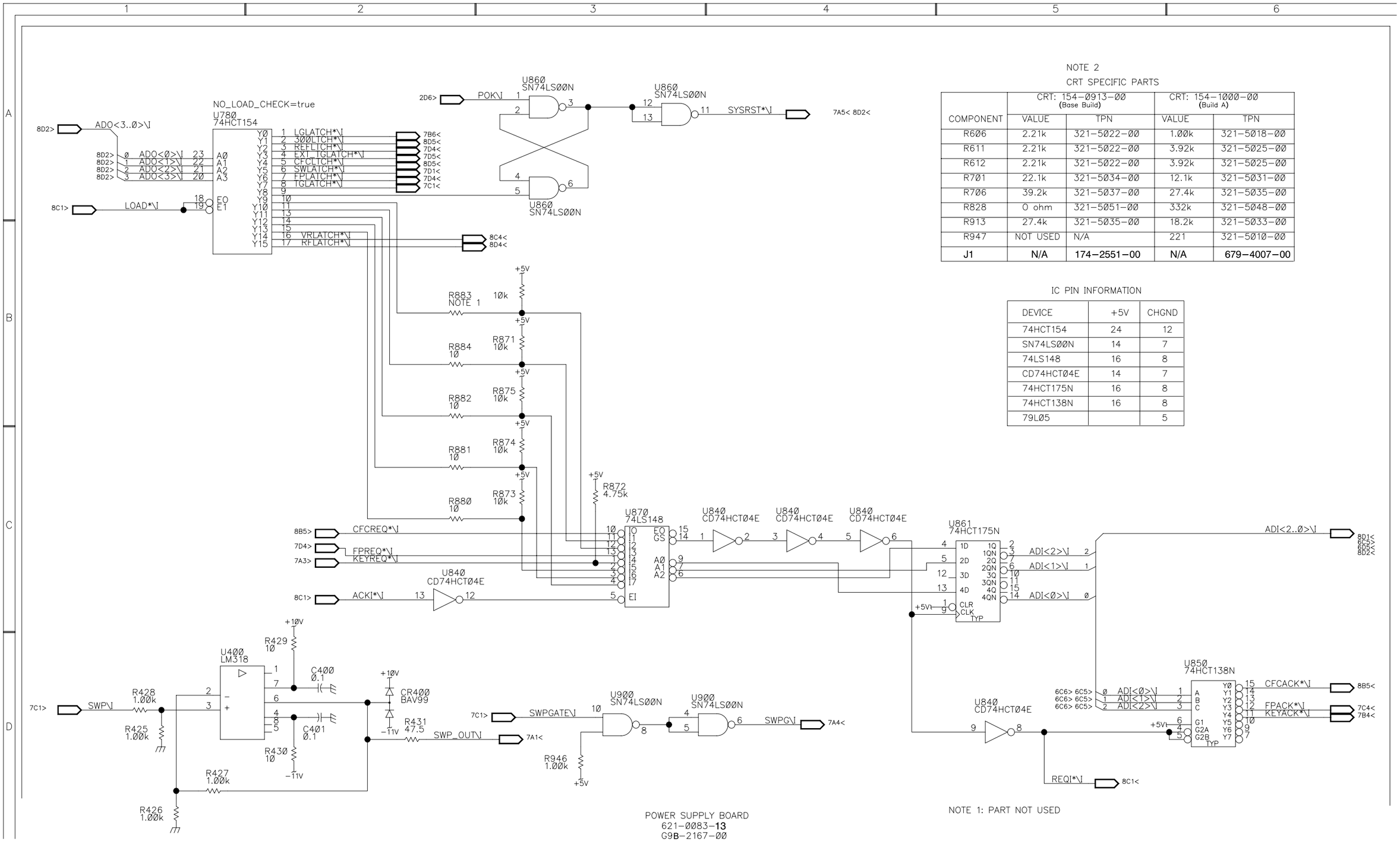

NOTE 2

CRT SPECIFIC PARTS

COMPONENT	CRT: 154-0913-00 (Base Build) VALUE	TPN	CRT: 154-1000-00 (Build A) VALUE	TPN
R606	2.21k	321-5022-00	1.00k	321-5018-00
R611	2.21k	321-5022-00	3.92k	321-5025-00
R612	2.21k	321-5022-00	3.92k	321-5025-00
R701	22.1k	321-5034-00	12.1k	321-5031-00
R706	39.2k	321-5037-00	27.4k	321-5035-00
R828	0 ohm	321-5051-00	332k	321-5048-00
R913	27.4k	321-5035-00	18.2k	321-5033-00
R947	NOT USED	N/A	221	321-5010-00
J1	N/A	174-2551-00	N/A	679-4007-00

IC PIN INFORMATION

DEVICE	+5V	CHGND
74HCT154	24	12
SN74LS00N	14	7
74LS148	16	8
CD74HCT04E	14	7
74HCT175N	16	8
74HCT138N	16	8
79L05		5

POWER SUPPLY BOARD
621-0083-13
G9B-2167-00

NOTE 1: PART NOT USED

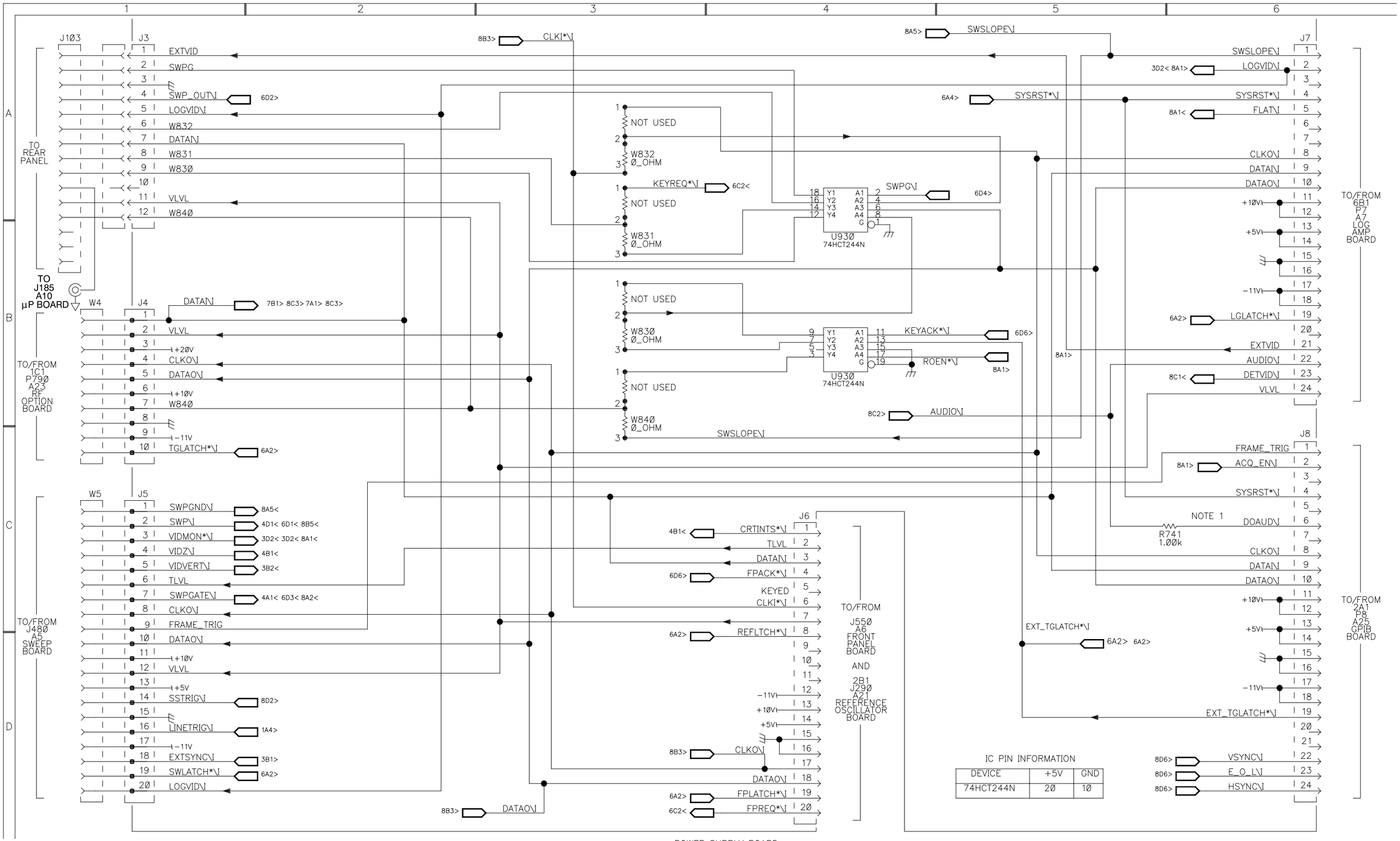
J1Ø3
J3
TO REAR PANEL
EXTVID
SWPG
SWP_OUT\
LOGVID\
W832
DATA\
W831
W83Ø
VLVL
W84Ø
TO J185 A10 µP BOARD
W4
J4
TO/FROM 1C1 P79Ø A23 RF OPTION BOARD
DATA\
VLVL
+2ØV
CLKO\
DATAO\
+1ØV
W84Ø
-11V
TGLATCH*\
W5
J5
TO/FROM J48Ø A5 SWEEP BOARD
SWPGND\
SWP\
VIDMON*\
VIDZ\
VIDVERT\
TLVL
SWPGATE\
CLKO\
FRAME_TRIG
DATAO\
+1ØV
VLVL
+5V
SSTRIG\
LINETRIG\
-11V
EXTSYNC\
SWLATCH*\
LOGVID\
CLKI*\
SWSLOPE\
NOT USED
W832 Ø_OHM
KEYREQ*\
W831 Ø_OHM
W83Ø Ø_OHM
W84Ø Ø_OHM
U93Ø 74HCT244N
SWPG\
KEYACK*\
ROEN*\
AUDIO\
J6
TO/FROM J55Ø A6 FRONT PANEL BOARD AND 2B1 J29Ø A21 REFERENCE OSCILLATOR BOARD
CRTINTS*\
TLVL
DATA\
FPACK*\
KEYED
CLKI*\
REFLTCH*\
-11V
+1ØV
+5V
CLKO\
DATAO\
FPLATCH*\
FPREQ*\
J7
TO/FROM 6B1 P7 A7 LOG AMP BOARD
SWSLOPE\
LOGVID\
SYSRST*\
FLAT\
CLKO\
DATA\
DATAO\
+1ØV
+5V
-11V
LGLATCH*\
EXTVID
AUDIO\
DETVID\
VLVL
J8
TO/FROM 2A1 P8 A25 GPIB BOARD
FRAME_TRIG
ACQ_EN\
SYSRST*\
NOTE 1
R741 1.ØØk
DOAUD\
CLKO\
DATA\
DATAO\
+1ØV
+5V
-11V
EXT_TGLATCH*\
VSYNC\
E_O_L\
HSYNC\
IC PIN INFORMATION
DEVICE | +5V | GND
74HCT244N | 2Ø | 1Ø
POWER SUPPLY BOARD
621-ØØ83-13
G9B-2167-ØØ
2711/2712
CONNECTORS A
S/N B030000 and above
A15A1
7
OF:9

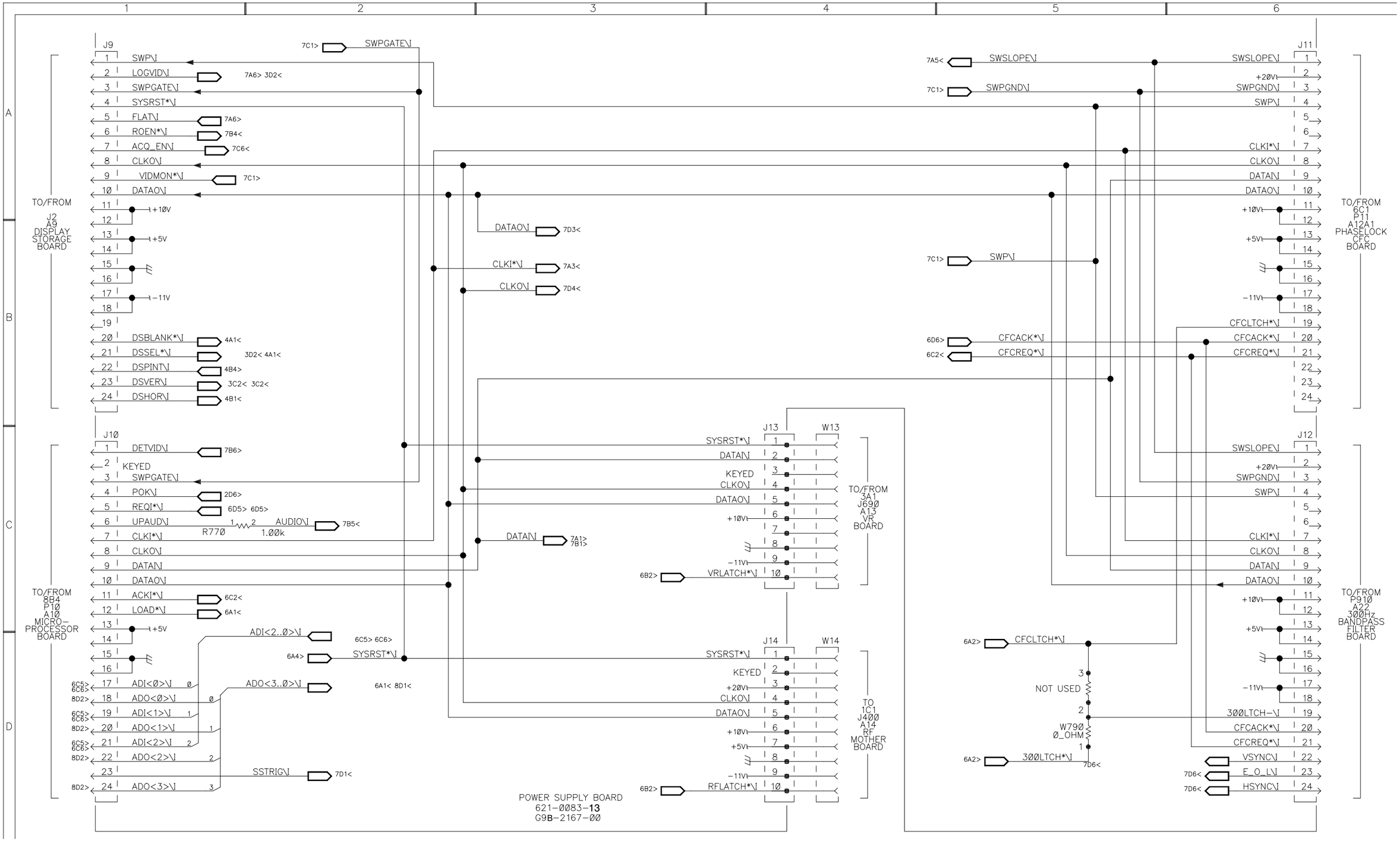

CONNECTORS B
S/N B030000 and above

A15A1 8 OF:9

TG ISOLATION AMPS

S15
a

CIRCUIT NUMBER	SCHEMATIC LOCATION	BOARD LOCATION	CIRCUIT NUMBER	SCHEMATIC LOCATION	BOARD LOCATION	CIRCUIT NUMBER	SCHEMATIC LOCATION	BOARD LOCATION
C100	B-3	B-1	CR130	E-3	D-1	R250	F-3	D-1
C110	C-2	C-1	CR131	E-3	D-1	R251	F-4	D-1
C111	B-3	B-1	CR410	D-1	B-2	R310	A-2	B-2
C130	C-3	C-1	CR510	G-4	B-3	R311	A-1	B-2
C140	D-3	D-1	CR530	F-6	C-2	R312	A-1	B-2
C141	E-3	D-1	CR600	H-4	A-3	R313	A-1	B-2
C150	F-4	D-1	J100	A-3	B-1	R314	E-1	B-2
C200	A-2	B-1	J110	H-1	B-1	R315	E-2	B-2
C201	A-2	B-1	J500	H-5	A-2	R316	E-1	C-2
C210	B-2	B-1	L130	D-3	D-1	R320	F-5	C-2
C220	C-1	C-1	L150	E-3	D-1	R340	F-3	D-2
C221	D-2	C-2	L210	B-2	B-2	R341	F-2	D-2
C230	C-2	C-1	L230	D-2	C-1	R342	F-1	D-2
C231	C-2	C-1	Q110	B-3	B-1	R343	F-1	D-2
C232	D-2	C-1	Q130	D-3	C-1	R344	F-2	D-2
C236	A-4	CHASSIS	Q220	D-2	C-1	R345	F-1	D-2
C240	E-2	D-2	Q250	F-4	D-1	R410	D-1	B-2
C241	F-4	D-1	Q300	A-2	B-2	R411	E-2	C-2
C242	F-3	D-1	Q340	G-2	D-2	R412	G-5	C-2
C300	A-1	B-2	Q440	F-1	D-2	R420	F-5	C-2
C301	B-2	B-2	R100	A-3	B-1	R421	F-6	C-2
C310	A-2	B-2	R101	A-3	B-1	R440	F-2	D-2
C311	E-1	C-2	R102	A-3	B-1	R500	G-4	B-3
C320	F-5	C-2	R120	C-3	C-1	R510	G-5	C-2
C322	A-4	CHASSIS	R121	C-3	C-1	R511	G-4	B-3
C340	F-3	D-2	R122	C-3	C-1	R512	G-4	B-3
C341	F-2	D-2	R130	C-3	C-1	R520	F-6	C-2
C342	G-3	D-2	R140	E-3	D-1	R521	F-6	C-3
C350	G-3	D-2	R141	E-3	D-1	R530	F-6	C-2
C410	E-2	C-2	R200	A-2	B-1	R600	H-3	B-3
C440	E-1	D-2	R210	C-1	C-1	R601	H-4	B-3
C510	G-5	B-2	R220	C-2	C-1	R602	H-4	B-3
C511	G-5	C-2	R221	C-1	C-1	TP510	G-5	B-2
C512	G-4	B-3	R230	D-2	C-1	U310A	E-1	C-2
C513	G-4	C-3	R231	C-1	C-1	U310B	F-5	C-2
C520	E-6	C-2						

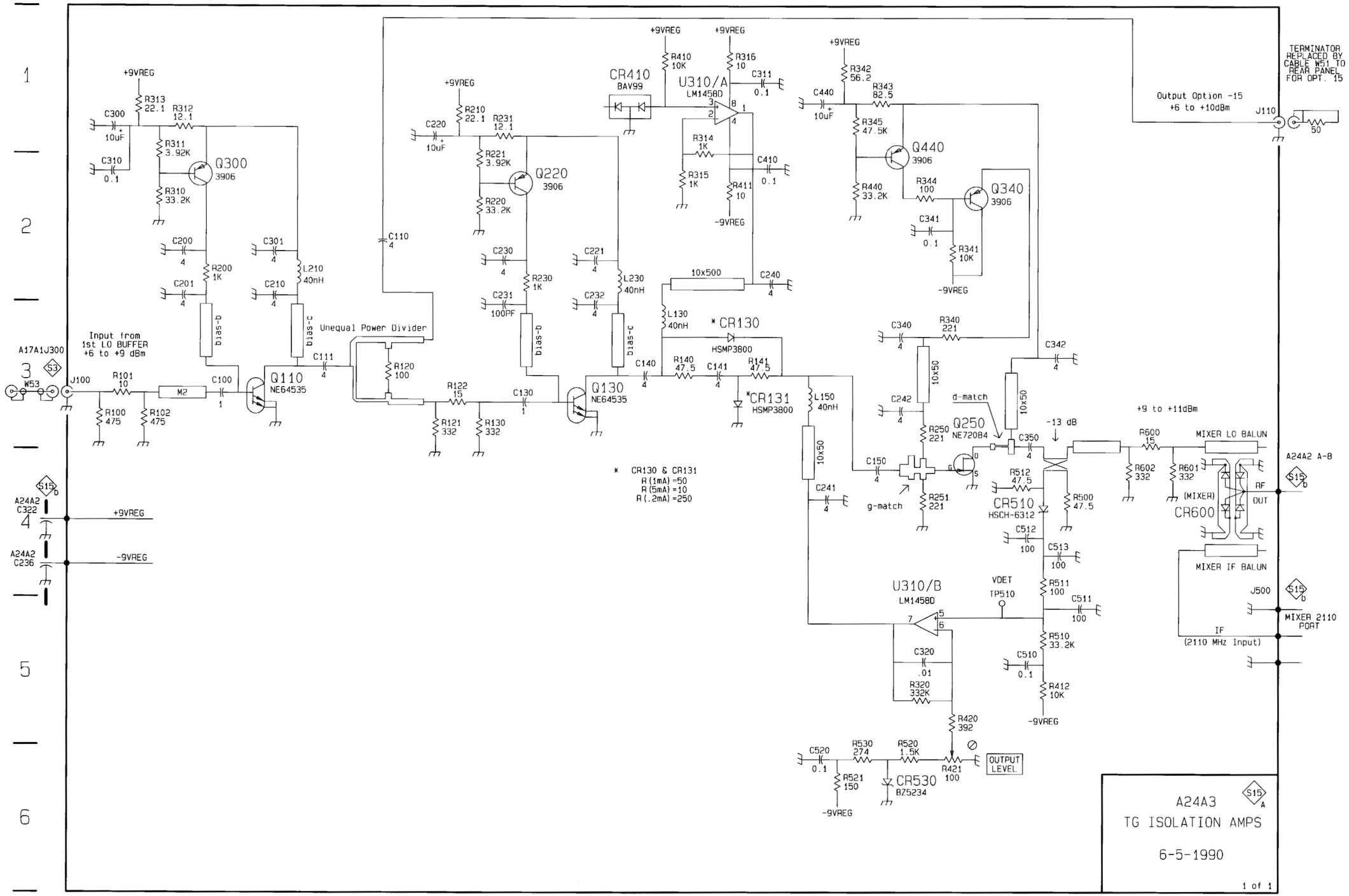
A24A3
TG ISOLATION AMPS
6-5-1990
1 of 1
Input from
1st LO BUFFER
+6 to +9 dBm
A17A1J300
W53
J100
Unequal Power Divider
Q300
3906
Q110
NE64535
Q220
3906
Q130
NE64535
Q340
3906
Q440
3906
Q250
NE72084
U310/A
LM1458D
U310/B
LM1458D
CR410
BAV99
CR130
HSMP3800
CR131
HSMP3800
CR510
HSCH-6312
CR530
BZ5234
CR600
(MIXER)
MIXER LO BALUN
MIXER IF BALUN
d-match
g-match
-13 dB
+9 to +11dBm
Output Option -15
+6 to +10dBm
TERMINATOR
REPLACED BY
CABLE W51 TO
REAR PANEL
FOR OPT. 15
J110
A24A2 A-8
RF
OUT
J500
MIXER 2110
PORT
IF
(2110 MHz Input)
VDET
TP510
OUTPUT
LEVEL
A24A2
C322
A24A2
C236
+9VREG
-9VREG
* CR130 & CR131
R(1mA)=50
R(5mA)=10
R(.2mA)=250

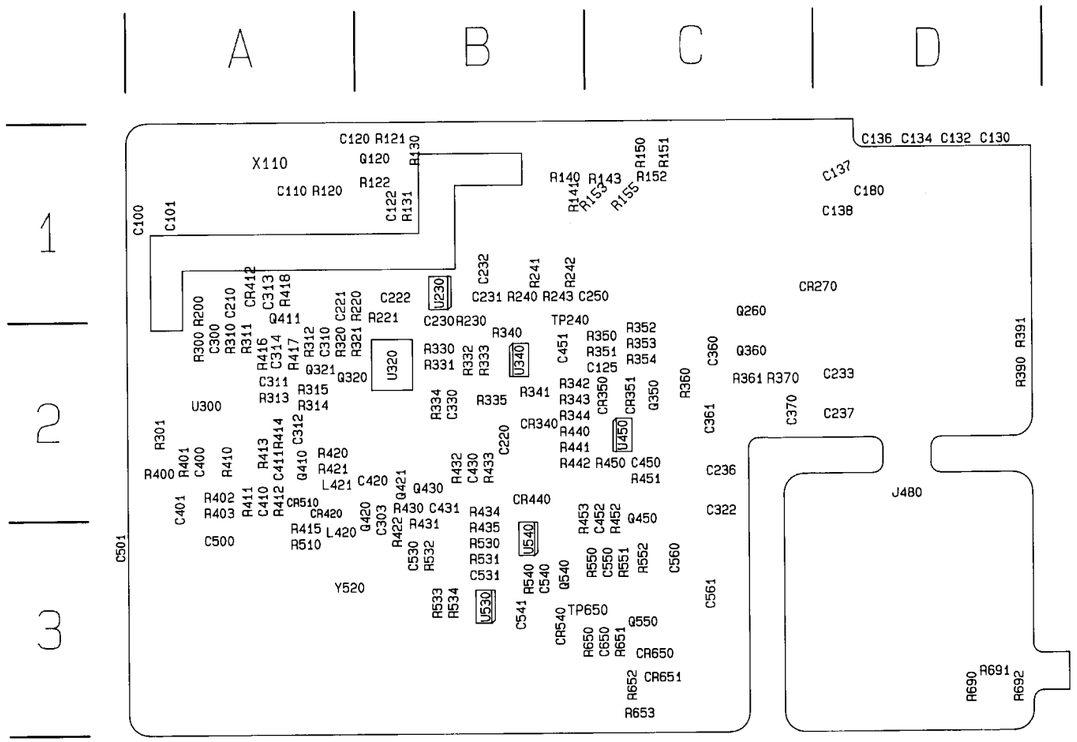

A24A2–TG Phase Lock Loop Board

TG ISOLATION AMPS

S15 a

CIRCUIT NUMBER	SCHEMATIC LOCATION	BOARD LOCATION	CIRCUIT NUMBER	SCHEMATIC LOCATION	BOARD LOCATION	CIRCUIT NUMBER	SCHEMATIC LOCATION	BOARD LOCATION
C100	B-3	B-1	CR130	E-3	D-1	R250	F-3	D-1
C110	C-2	C-1	CR131	E-3	D-1	R251	F-4	D-1
C111	B-3	B-1	CR410	D-1	B-2	R310	A-2	B-2
C130	C-3	C-1	CR510	G-4	B-3	R311	A-1	B-2
C140	D-3	D-1	CR530	F-6	C-2	R312	A-1	B-2
C141	E-3	D-1	CR600	H-4	A-3	R313	A-1	B-2
C150	F-4	D-1	J100	A-3	B-1	R314	E-1	B-2
C200	A-2	B-1	J110	H-1	B-1	R315	E-2	B-2
C201	A-2	B-1	J500	H-5	A-2	R316	E-1	C-2
C210	B-2	B-1	L130	D-3	D-1	R320	F-5	C-2
C220	C-1	C-1	L150	E-3	D-1	R340	F-3	D-2
C221	D-2	C-2	L210	B-2	B-2	R341	F-2	D-2
C230	C-2	C-1	L230	D-2	C-1	R342	F-1	D-2
C231	C-2	C-1	Q110	B-3	B-1	R343	F-1	D-2
C232	D-2	C-1	Q130	D-3	C-1	R344	F-2	D-2
C236	A-4	CHASSIS	Q220	D-2	C-1	R345	F-1	D-2
C240	E-2	D-2	Q250	F-4	D-1	R410	D-1	B-2
C241	F-4	D-1	Q300	A-2	B-2	R411	E-2	C-2
C242	F-3	D-1	Q340	G-2	D-2	R412	G-5	C-2
C300	A-1	B-2	Q440	F-1	D-2	R420	F-5	C-2
C301	B-2	B-2	R100	A-3	B-1	R421	F-6	C-2
C310	A-2	B-2	R101	A-3	B-1	R440	F-2	D-2
C311	E-1	C-2	R102	A-3	B-1	R500	G-4	B-3
C320	F-5	C-2	R120	C-3	C-1	R510	G-5	C-2
C322	A-4	CHASSIS	R121	C-3	C-1	R511	G-4	B-3
C340	F-3	D-2	R122	C-3	C-1	R512	G-4	B-3
C341	F-2	D-2	R130	C-3	C-1	R520	F-6	C-2
C342	G-3	D-2	R140	E-3	D-1	R521	F-6	C-3
C350	G-3	D-2	R141	E-3	D-1	R530	F-6	C-2
C410	E-2	C-2	R200	A-2	B-1	R600	H-3	B-3
C440	E-1	D-2	R210	C-1	C-1	R601	H-4	B-3
C510	G-5	B-2	R220	C-2	C-1	R602	H-4	B-3
C511	G-5	C-2	R221	C-1	C-1	TP510	G-5	B-2
C512	G-4	B-3	R230	D-2	C-1	U310A	E-1	C-2
C513	G-4	C-3	R231	C-1	C-1	U310B	F-5	C-2
C520	E-6	C-2						

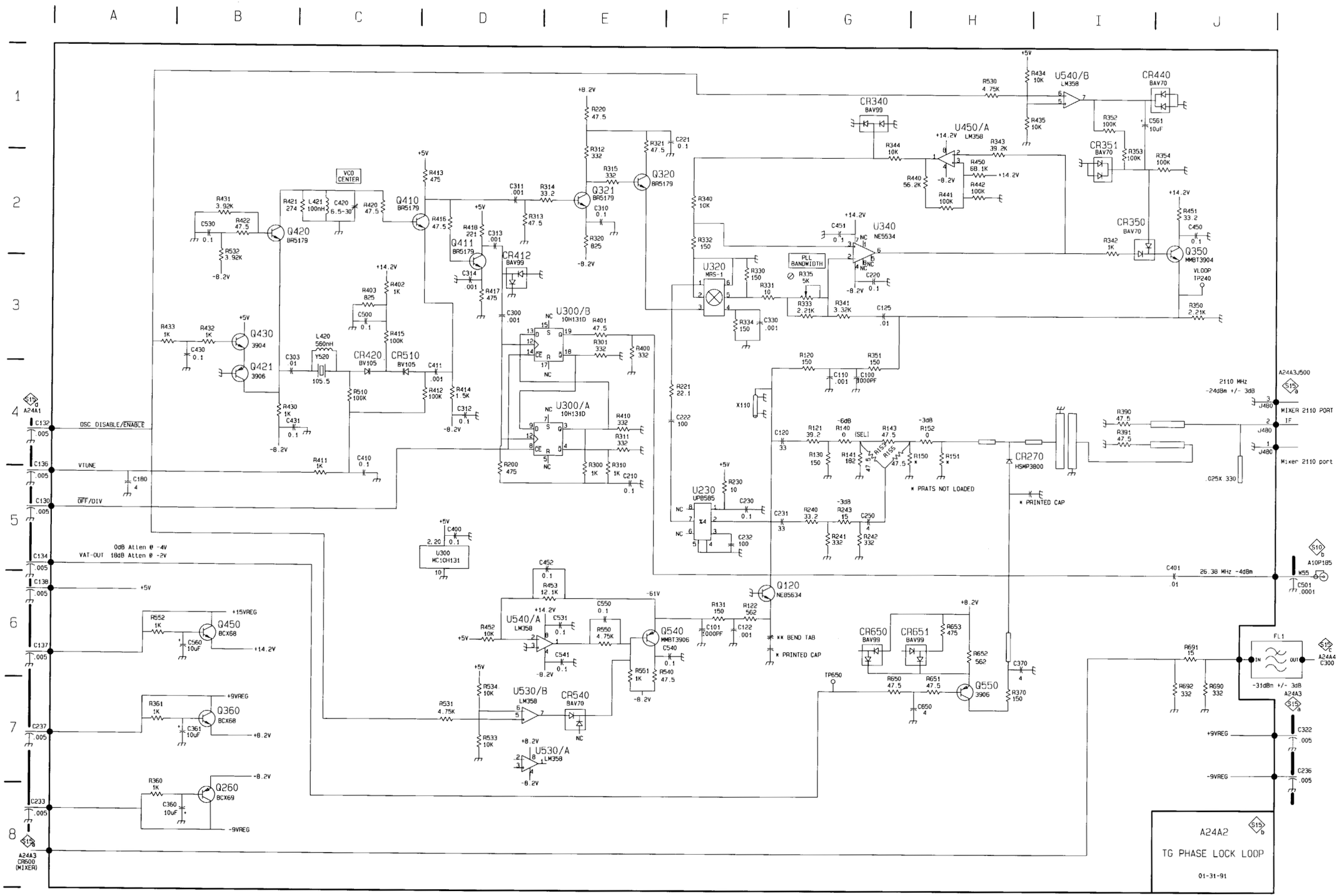
A24A2
TG PHASE LOCK LOOP
01-31-91
OSC DISABLE/ENABLE
VTUNE
OFF/DIV
VAT-OUT
0dB Atten @ -4V
18dB Atten @ -2V
VCO CENTER
PLL BANDWIDTH
MIXER 2110 PORT
Mixer 2110 port
2110 MHz
-24dBm +/- 3dB
26.38 MHz -4dBm
-31dBm +/- 3dB
* PRATS NOT LOADED
* PRINTED CAP
** BEND TAB
* PRINTED CAP
+9VREG
-9VREG
A24A3
CR600
(MIXER)

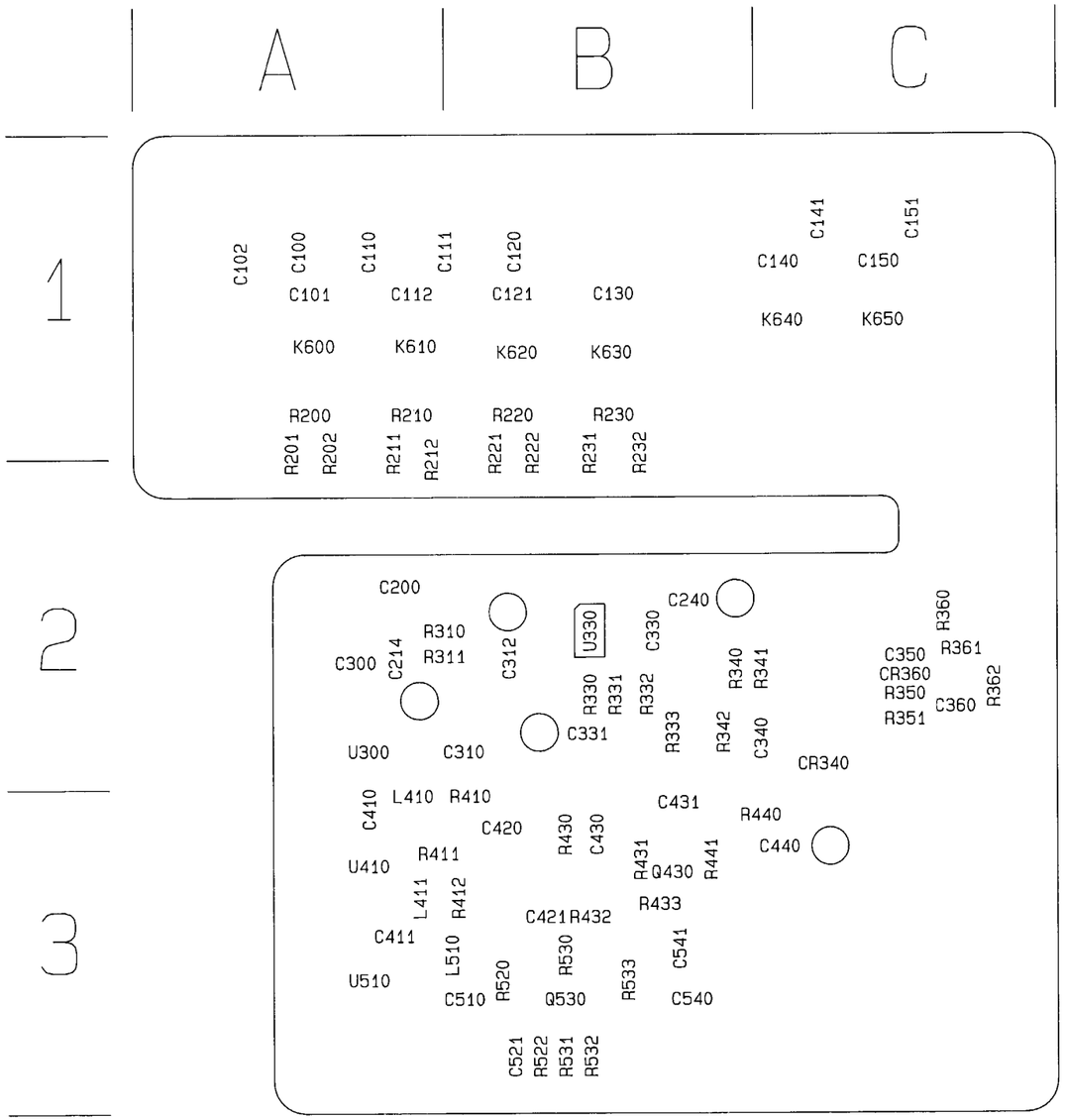

A24A4–TG Amplifier Board

TG AMPLIFIER

S15 C

CIRCUIT NUMBER	SCHEMATIC LOCATION	BOARD LOCATION	CIRCUIT NUMBER	SCHEMATIC LOCATION	BOARD LOCATION
C100	I-4	CHASSIS	R201	I-5	A-1
C101	I-4	A-1	R202	I-5	A-1
C102	J-5	A-1	R210	H-5	A-1
C110	G-4	CHASSIS	R211	H-5	A-1
C111	H-4	CHASSIS	R212	H-5	A-1
C112	H-4	A-1	R220	G-5	B-1
C120	G-4	CHASSIS	R221	G-5	B-1
C121	G-4	B-1	R222	G-5	B-1
C130	G-4	B-1	R230	G-5	B-1
C200	A-3	A-2	R231	G-5	B-1
C214	A-4	CHASSIS	R232	G-5	B-1
C240	A-5	CHASSIS	R310	A-3	A-2
C300	A-3	A-2	R311	A-3	A-2
C310	C-3	B-2	R330	B-6	B-2
C312	A-5	CHASSIS	R331	B-5	B-2
C330	B-5	B-2	R332	B-5	B-2
C331	A-6	CHASSIS	R333	B-5	B-2
C340	B-5	C-2	R340	B-4	B-2
C350	D-6	C-2	R341	B-5	B-2
C360	D-5	C-2	R342	B-5	B-2
C410	B-3	A-3	R350	D-6	C-2
C411	C-3	A-3	R351	C-6	C-2
C420	B-3	B-3	R360	C-6	C-2
C421	D-4	B-3	R361	D-5	C-2
C430	D-4	B-3	R362	D-5	C-2
C431	D-3	B-3	R410	B-3	B-3
C440	A-4	CHASSIS	R411	B-3	A-3
C510	C-3	B-3	R412	C-3	B-3
C521	D-5	B-3	R430	D-4	B-3
C540	E-4	B-3	R431	D-3	B-3
C541	D-3	B-3	R432	D-4	B-3
CR340	C-6	C-2	R433	D-3	B-3
CR360	D-6	C-2	R440	D-3	B-3
J600	J-5	CHASSIS	R441	D-3	B-3
K600	I-4	A-1	R520	D-4	B-3
K610	H-4	A-1	R522	D-5	B-3
K620	G-4	B-1	R530	E-5	B-3
K630	G-4	B-1	R531	D-5	B-3
L410	B-3	A-3	R532	D-5	B-3
L411	B-3	A-3	R533	E-4	B-3
L510	C-3	B-3	U300	A-3	A-2
Q430	D-3	B-3	U330B	B-5	B-2
Q530	D-4	B-3	U410	B-3	A-3
R200	I-5	A-1	U510	C-3	A-3

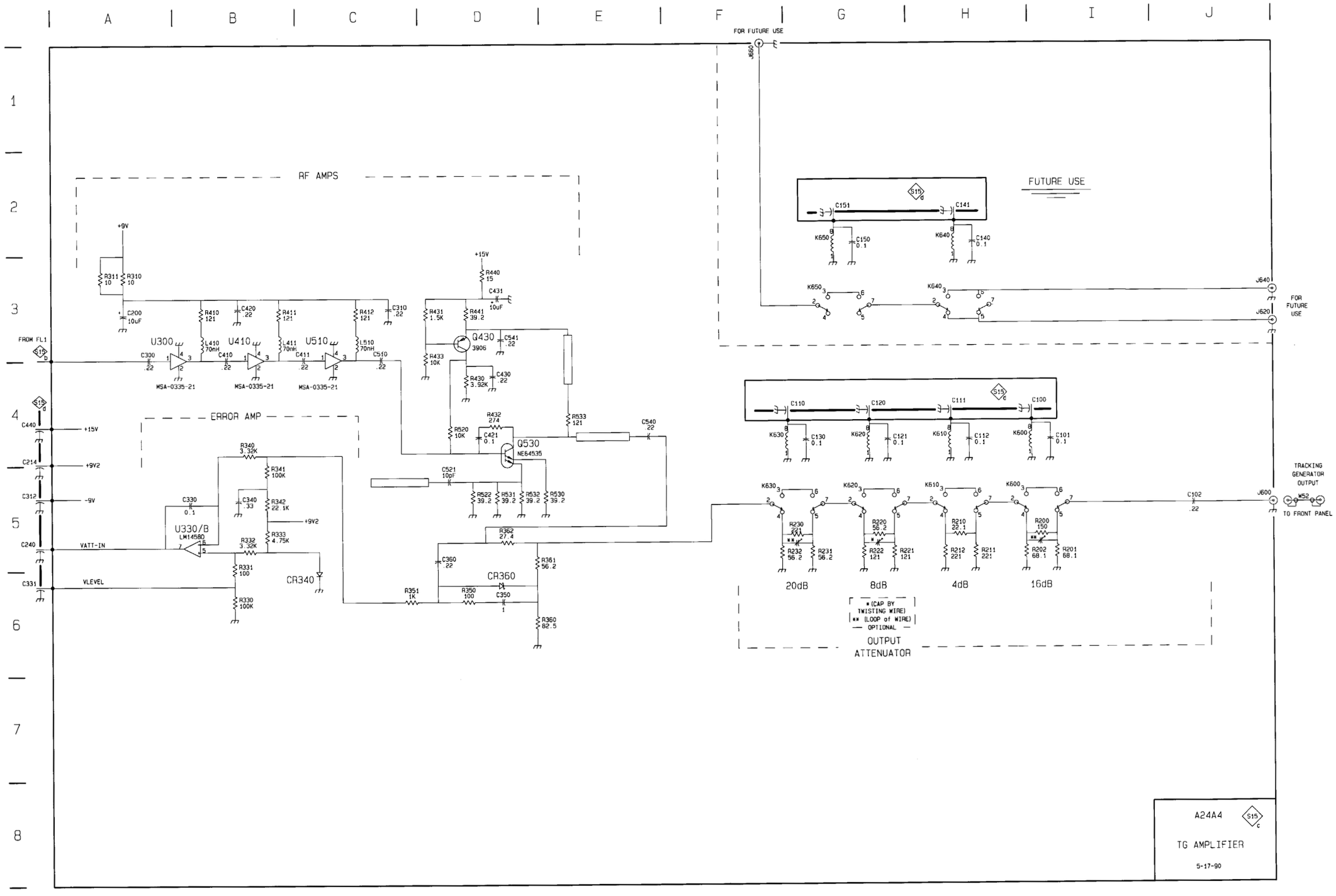

FOR FUTURE USE
J660
RF AMPS
FUTURE USE
FROM FL1
U300
U410
U510
MSA-0335-21
Q430
3906
Q530
NE64535
ERROR AMP
U330/B
LM14580
CR340
CR360
VATT-IN
VLEVEL
+15V
+9V2
-9V
+9V
J640
J620
FOR FUTURE USE
TRACKING GENERATOR OUTPUT
J600
TO FRONT PANEL
20dB
8dB
4dB
16dB
* (CAP BY TWISTING WIRE)
** (LOOP of WIRE)
OPTIONAL
OUTPUT ATTENUATOR
A24A4
TG AMPLIFIER
5-17-90

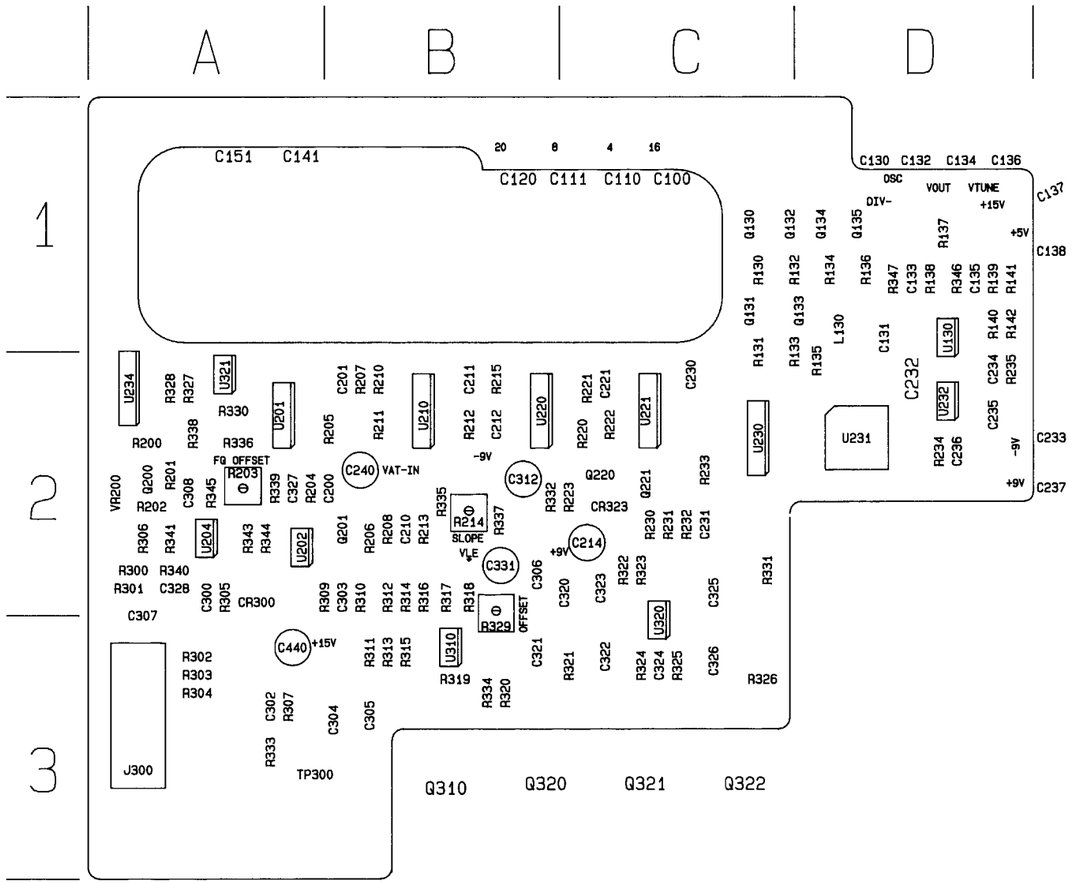

A24A1–TG Interface Board

TG INTERFACE

S15 d

CIRCUIT NUMBER	SCHEMATIC LOCATION	BOARD LOCATION	CIRCUIT NUMBER	SCHEMATIC LOCATION	CIRCUIT NUMBER	CIRCUIT NUMBER	SCHEMATIC LOCATION	CIRCUIT NUMBER
C100	J-4	CHASSIS	Q135	G-5	D-1	R313	F-7	B-3
C110	J-4	CHASSIS	Q200	B-8	A-2	R314	D-8	B-2
C111	J-4	CHASSIS	Q201	H-7	B-2	R315	F-8	B-3
C120	J-5	CHASSIS	Q220	H-8	C-2	R316	C-8	B-2
C130	J-3	CHASSIS	Q221	D-4	C-2	R317	I-7	B-2
C131	E-2	D-1	Q310	F-8	B-3	R318	I-6	B-2
C132	J-2	CHASSIS	Q320	D08	B-3	R319	F-8	B-3
C133	F-2	D-1	Q321	G-6	C-3	R320	D-7	B-3
C134	J-1	CHASSIS	Q322	E-6	C-3	R321	D-8	C-3
C135	F-3	D-1	R130	I-4	C-1	R322	F-7	C-2
C136	J-2	CHASSIS	R131	H-4	C-1	R323	E-6	C-2
C137	J-1	CHASSIS	R132	H-5	D-1	R324	F-6	C-3
C138	J-2	CHASSIS	R133	I-4	D-2	R325	D-6	C-3
C141	J-5	CHASSIS	R134	G-5	D-1	R326	D-7	C-3
C151	J-5	CHASSIS	R135	E-2	D-2	R327	D-1	A-2
C200	I-8	B-2	R136	F-5	D-1	R328	D-1	A-2
C201	A-2	B-2	R137	G-2	D-1	R329	I-6	B-3
C210	J-6	B-2	R138	F-2	D-1	R330	D-1	A-2
C211	A-1	B-2	R139	F-3	D-1	R331	E-6	C-2
C212	C-3	B-2	R140	F-2	D-1	R332	H-8	B-2
C214	J-7	CHASSIS	R141	E-2	D-1	R333	I-7	A-3
C221	C-5	C-2	R142	F-2	D-1	R334	I-6	B-3
C230	C-6	C-2	R200	A-3	A-2	R335	I-7	B-2
C231	D-7	C-2	R201	B-8	A-2	R336	H-7	A-2
C232	E-2	D-2	R202	B-8	A-2	R337	J-7	B-2
C233	J-2	CHASSIS	R203	H-6	A-2	R338	H-6	A-2
C234	E-5	D-2	R204	H-8	A-2	R339	A-7	A-2
C235	E-5	D-2	R205	B-4	B-2	R340	A-6	A-2
C236	E-4	D-2	R206	H-7	B-2	R341	B-8	A-2
C237	J-2	CHASSIS	R207	B-2	B-2	R343	A-6	A-2
C240	A-1	CHASSIS	R208	H-7	B-2	R344	A-6	A-2
C300	I-7	A-2	R210	A-1	B-2	R345	A-7	A-2
C302	D-8	A-3	R211	B-3	B-2	R346	F-3	D-1
C303	D-8	B-2	R212	B-2	B-2	R347	E-3	D-1
C304	G-7	B-3	R213	I-6	B-2	TP300	B-7	A-3
C305	G-8	B-3	R214	I-7	B-2	U130A	F-2	D-1
C306	I-6	B-2	R215	A-1	B-2	U130B	E-2	D-1
C307	A-8	A-3	R220	B-3	C-2	U201	B-4	A-2
C308	B-8	A-2	R221	G-7	C-2	U202A	H-7	A-2
C312	J-7	CHASSIS	R222	D-4	C-2	U202B	H-6	A-2
C320	D-8	C-2	R223	H-8	C-2	U204A	A-6	A-2
C321	E-8	B-3	R230	D-7	A-2	U204B	B-8	A-2
C322	G-7	C-3	R230	C-7	C-2	U210A	B-2	B-2
C323	G-7	C-2	R231	D-6	C-2	U210B	A-2	B-2
C324	D-6	C-3	R232	D-7	C-2	U220	B-3	B-2
C325	E-7	C-2	R233	B-4	C-2	U221	B-5	C-2
C326	E-7	C-3	R234	E-4	D-2	U230	B-6	C-2
C327	A-7	A-2	R235	E-5	D-2	U231	D-2	D-2
C328	A-6	A-2	R300	A-8	A-2	U232A	E-5	D-2
C331	J-6	CHASSIS	R301	A-7	A-2	U234	E-1	A-2
C440	J-7	CHASSIS	R302	A-4	A-3	U234A	D-1	A-2
CR300	I-6	A-2	R303	H-6	A-3	U234B	E-1	A-2
CR323	H-8	C-2	R304	A-3	A-3	U234C	F-1	A-2
J300	J-5	A-3	R305	I-7	A-2	U234D	F-1	A-2
J300	A-3	A-3	R306	A-7	A-2	U320B	F-6	C-3
L130	E-2	D-1	R307	D-7	A-3	U310A	C-8	B-3
Q130	I-4	C-1	R309	H-7	B-2	U310B	F-8	B-3
Q131	I-4	C-1	R310	D-8	B-2	U320A	D-6	C-3
Q132	H-5	C-1	R311	E-8	B-3	U321A	D-1	A-2
Q133	J-4	D-1	R312	E-8	B-2	VR200	A-7	A-2
Q134	G-5	D-1						

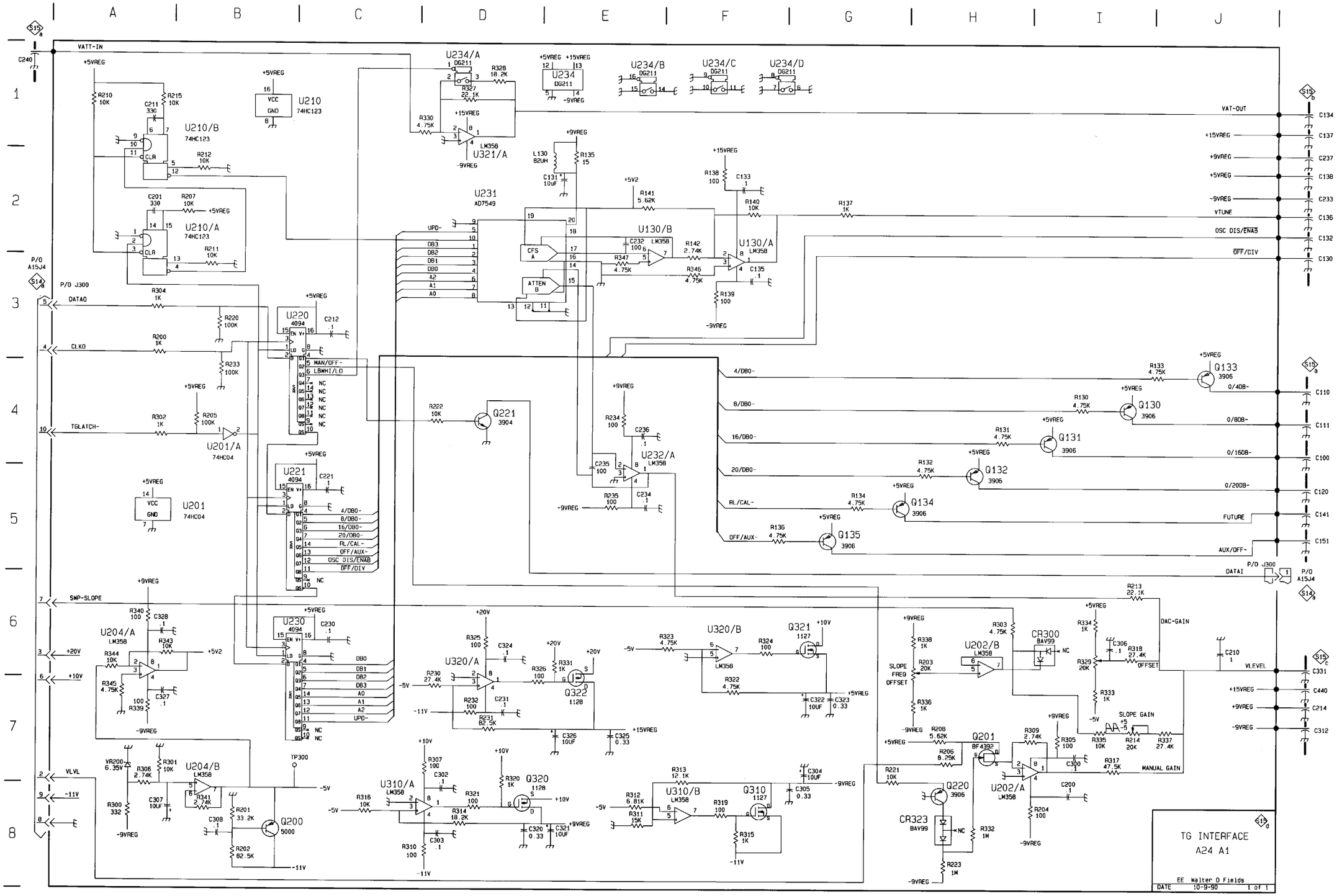
TG INTERFACE
A24 A1
EE Walter D Fields
DATE 10-9-90 1 of 1
VATT-IN
VAT-OUT
+15VREG
+9VREG
+5VREG
-9VREG
VTUNE
OSC DIS/ENAB
OFF/DIV
FUTURE
AUX/OFF-
DATAI
P/O J300
P/O A15J4
DATAO
CLKO
TGLATCH-
SWP-SLOPE
VLVL
-11V
+20V
+10V
-5V
+5V2
UPD-
DB3
DB2
DB1
DB0
A2
A1
A0
MAN/OFF-
LBWHT/LO
4/DB0-
8/DB0-
16/DB0-
20/DB0-
RL/CAL-
OFF/AUX-
OSC DIS/ENAB
OFF/DIV
DAC-GAIN
VLEVEL
OFFSET
SLOPE GAIN
MANUAL GAIN
SLOPE FREQ OFFSET
U210 74HC123
U210/B 74HC123
U210/A 74HC123
U201 74HC04
U201/A 74HC04
U220 4094
U221 4094
U230 4094
U234/A DG211
U234 DG211
U234/B DG211
U234/C DG211
U234/D DG211
U321/A LM358
U231 AD7549
U130/B LM358
U130/A LM358
U232/A LM358
U204/A LM358
U204/B LM358
U320/A
U320/B LM358
U310/A LM358
U310/B LM358
U202/B LM358
U202/A LM358
Q221 3904
Q133 3906
Q130 3906
Q131 3906
Q132 3906
Q134 3906
Q135 3906
Q321 1127
Q322 1128
Q320 1128
Q310 1127
Q200 5000
Q201 BF4392
Q220 3906
CR300 BAV99
CR323 BAV99
TP300

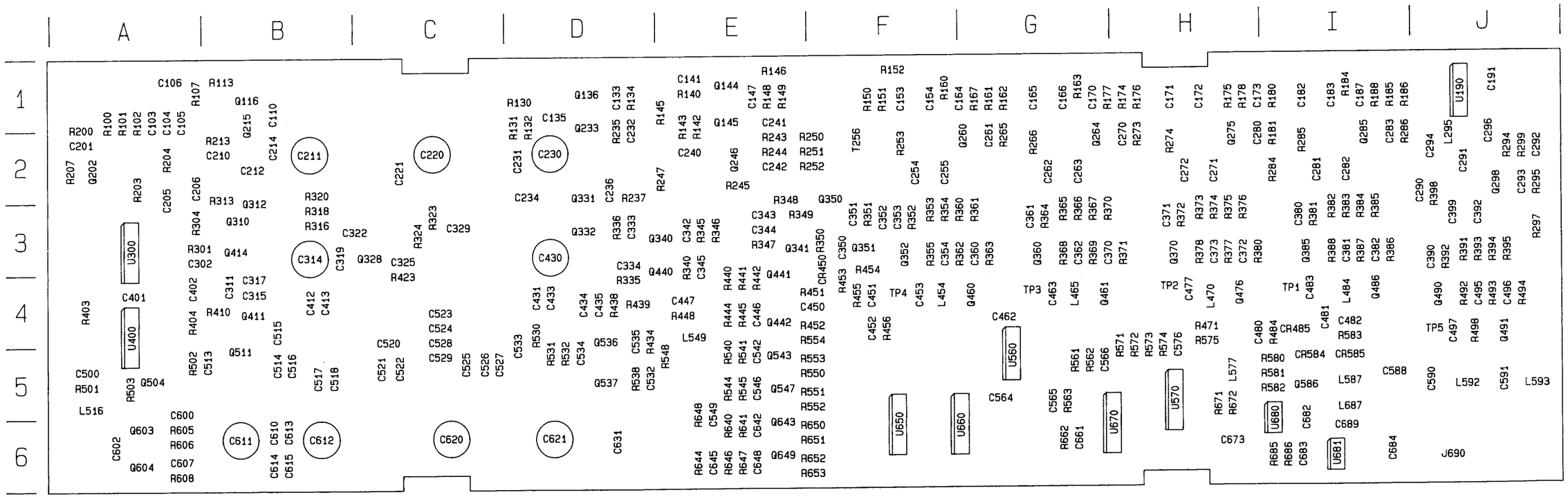

A13A1–VR Board (Front)

Change Reference: M76666

2710 (Serial Number **B044747 and up**)
2711 (Serial Number **B010178 and up**)
2712 (Serial Number **B010990 and up**)

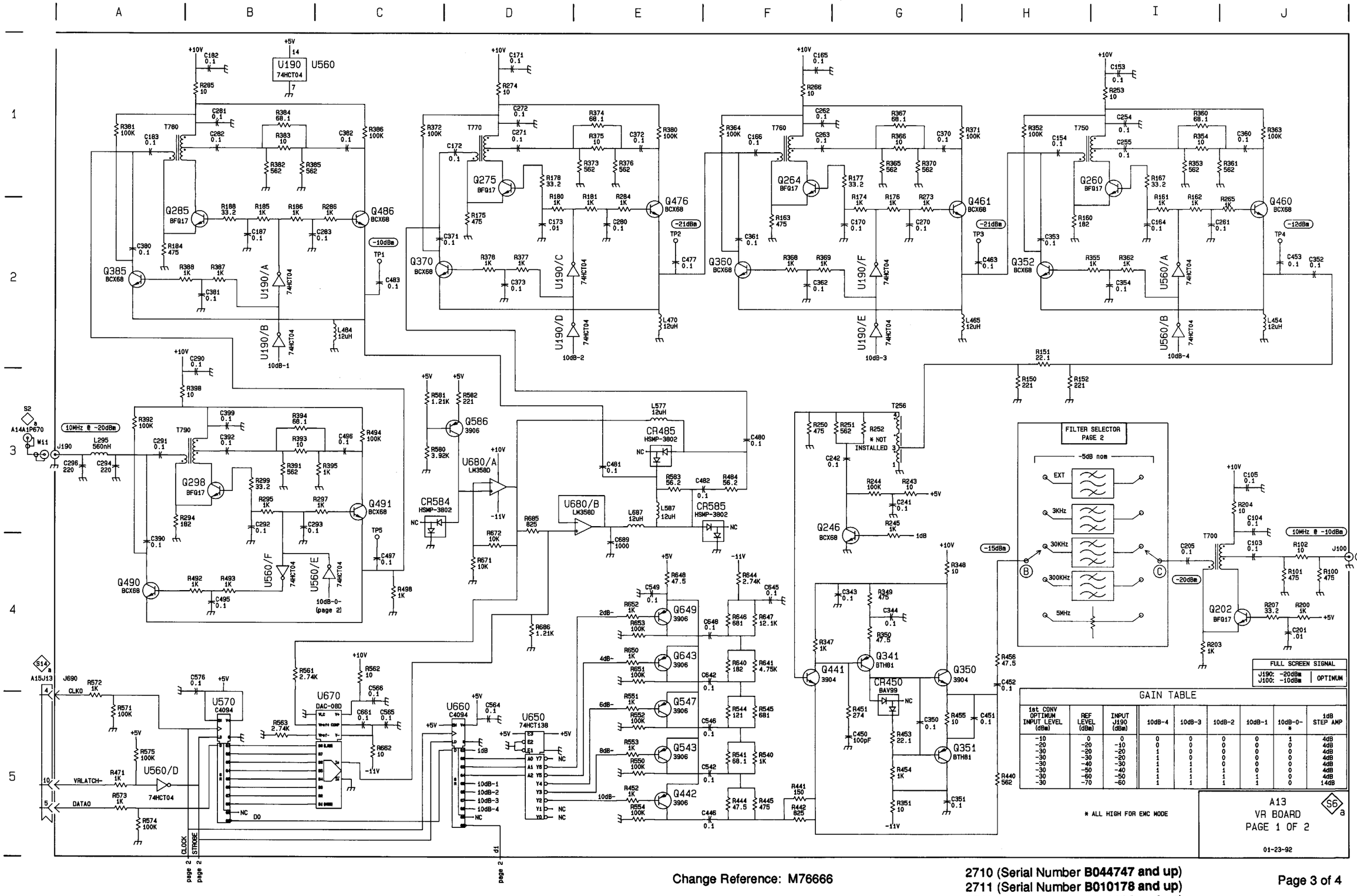

GAIN TABLE

1st CONV OPTIMUM INPUT LEVEL (dBm)	REF LEVEL (dBm)	INPUT J190 (dBm)	10dB-4	10dB-3	10dB-2	10dB-1	10dB-0-*	1dB STEP AMP
-10	0	0	0	0	0	0	1	4dB
-20	-20	-10	0	0	0	0	0	4dB
-30	-20	-20	1	0	0	0	0	4dB
-30	-30	-20	1	0	0	0	0	4dB
-30	-40	-30	1	1	0	0	0	4dB
-30	-50	-40	1	1	0	0	0	4dB
-30	-60	-50	1	1	1	1	0	4dB
-30	-70	-60	1	1	1	1	0	14dB

Change Reference: M76666

2710 (Serial Number **B044747 and up**)
2711 (Serial Number **B010178 and up**)
2712 (Serial Number **B010990 and up**)

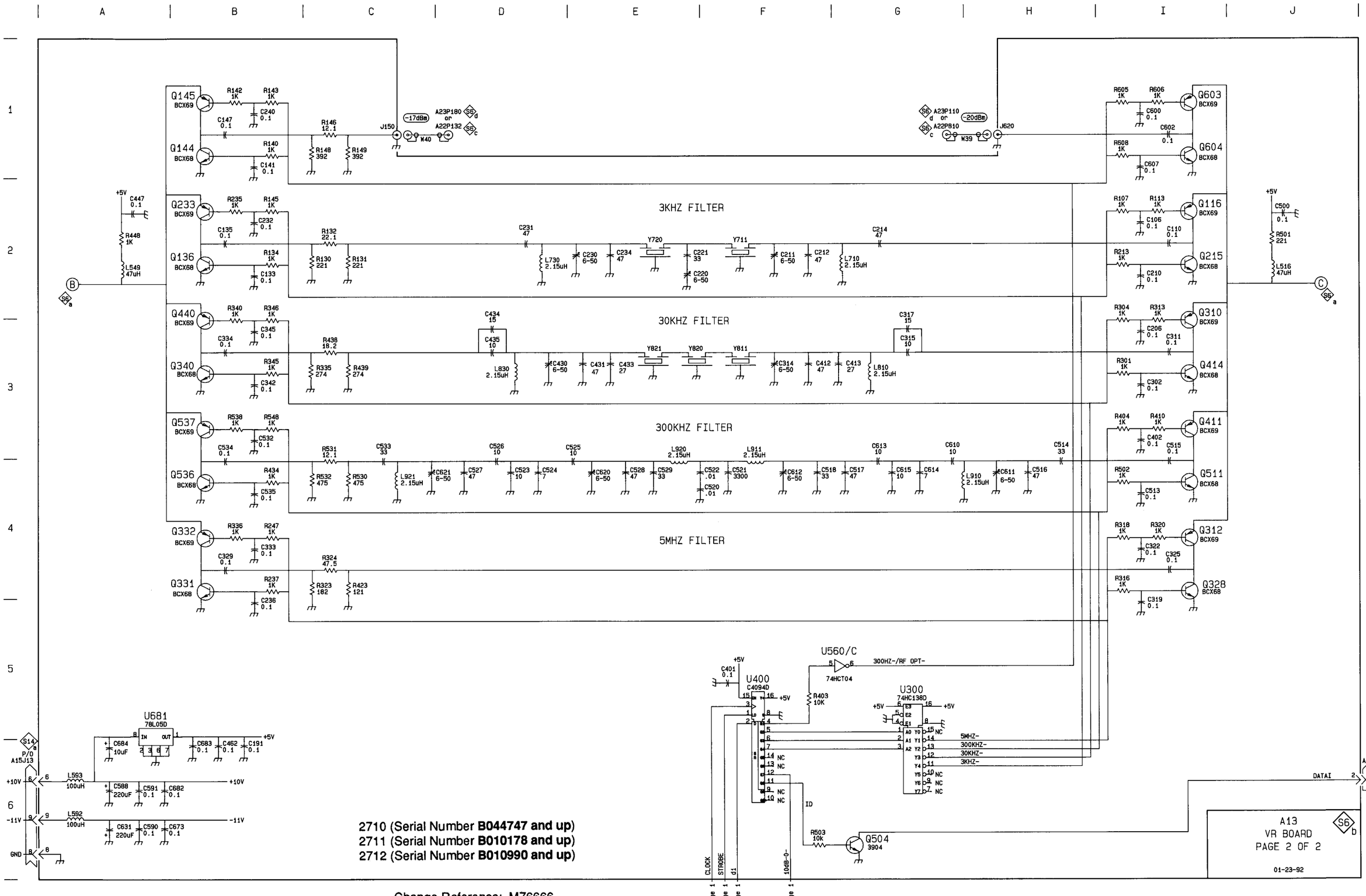

2710 (Serial Number **B044747 and up**)
2711 (Serial Number **B010178 and up**)
2712 (Serial Number **B010990 and up**)

Change Reference: M76666

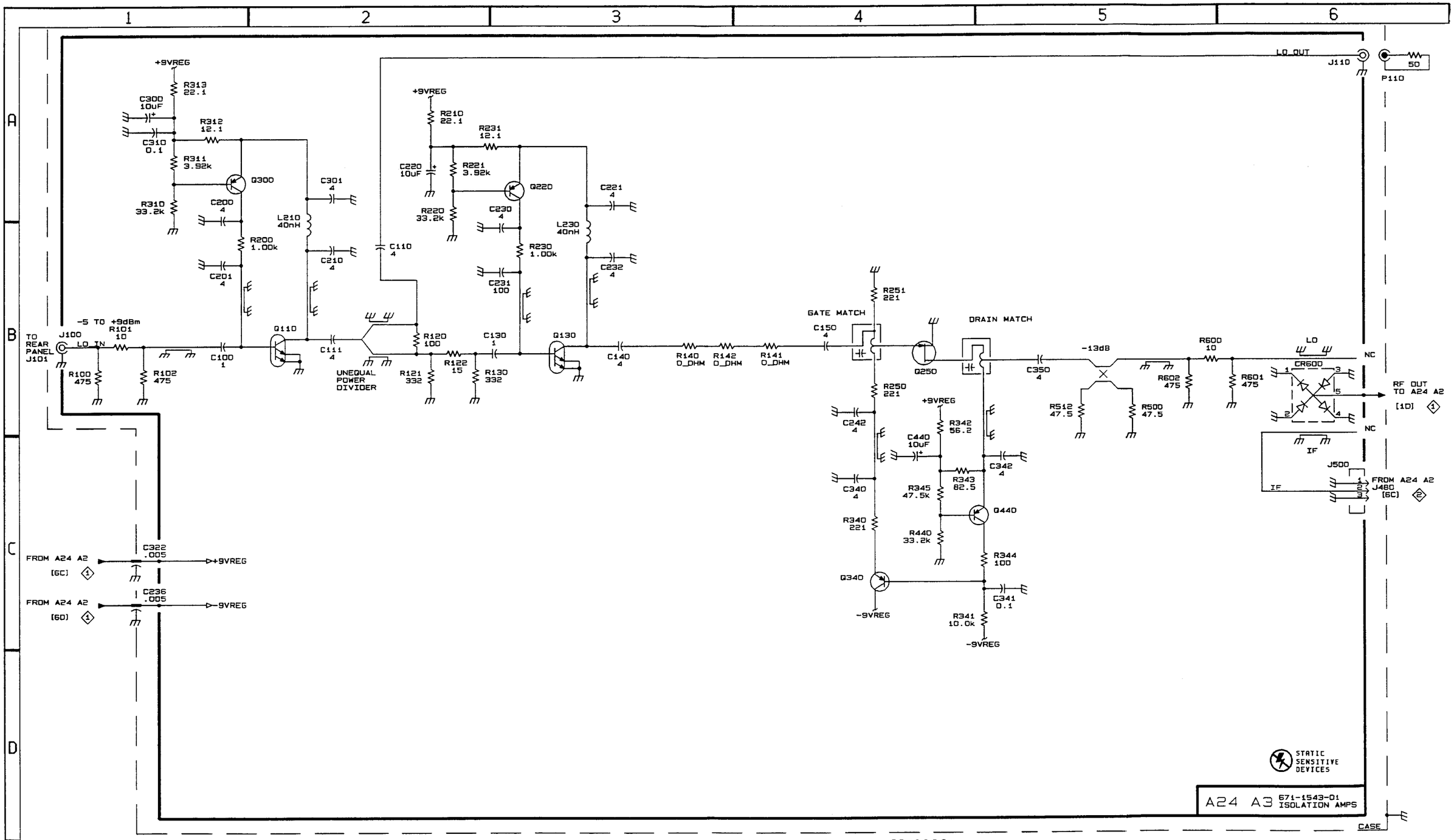

Change Reference: M79006

2711	B010387 and up
2712	B011473 and up

ISOLATION AMPS A24 A3

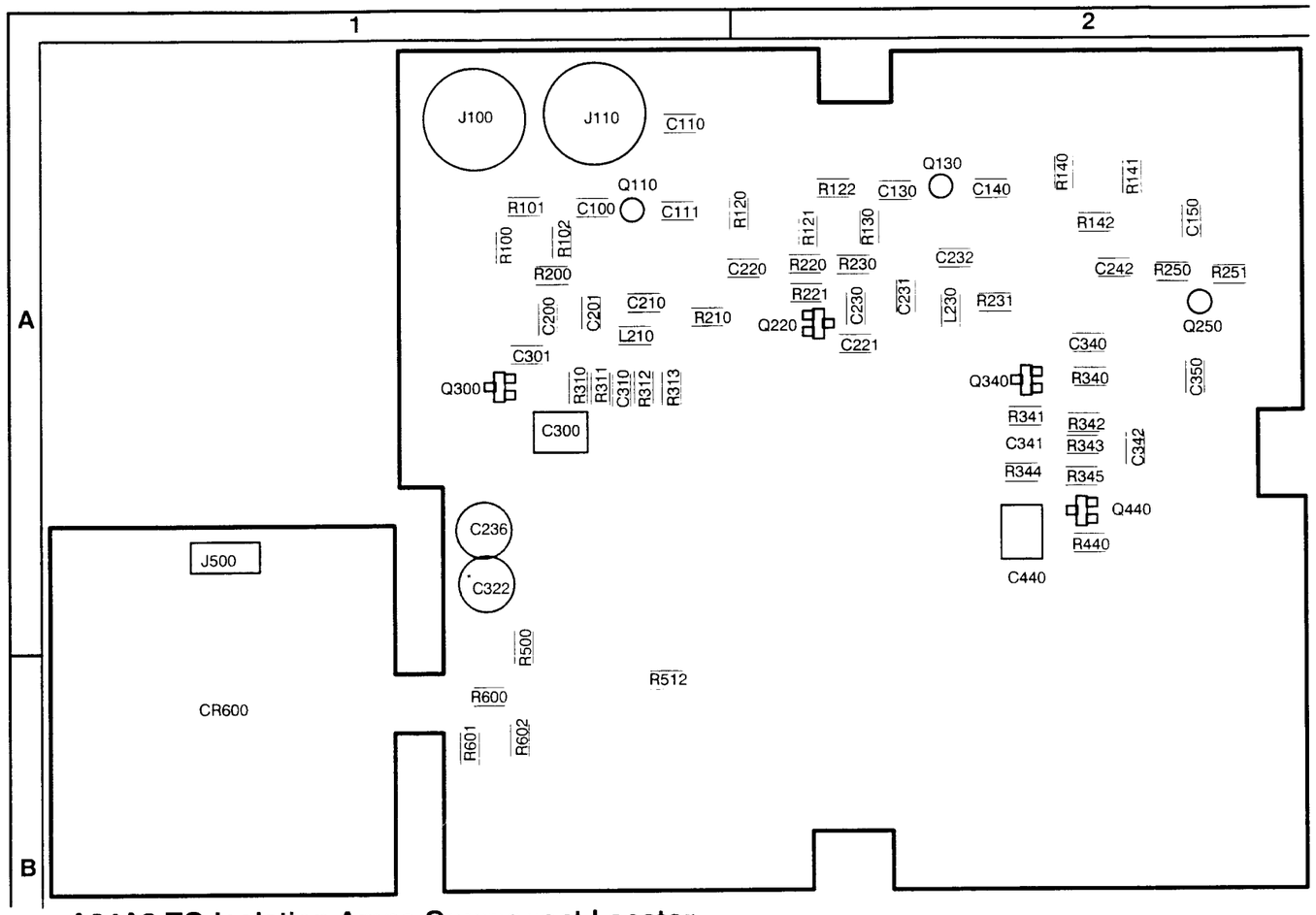

* On A24

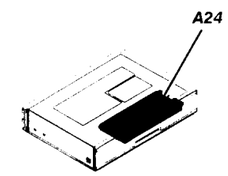

COMPONENT NUMBER EXAMPLE

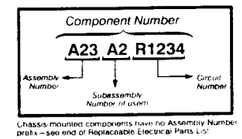

Chassis-mounted components have no Assembly Number prefix – see end of Replaceable Electrical Parts List.

STATIC SENSITIVE DEVICES

A24A3 TG Isolation Amps Component Locator

CIRCUIT NUMBER	SCHEM NUMBER	SCHEM LOCATION	BOARD NUMBER	BOARD LOCATION	CIRCUIT NUMBER	SCHEM NUMBER	SCHEM LOCATION	BOARD NUMBER	BOARD LOCATION	CIRCUIT NUMBER	SCHEM NUMBER	SCHEM LOCATION	BOARD NUMBER	BOARD LOCATION	CIRCUIT NUMBER	SCHEM NUMBER	SCHEM LOCATION	BOARD NUMBER	BOARD LOCATION	CIRCUIT NUMBER	SCHEM NUMBER	SCHEM LOCATION	BOARD NUMBER	BOARD LOCATION
C100	A24A3-1	1B	A24A3	1A	C300	A24A3-1	1A	A24A3	1A	L210	A24A3-1	2B	A24A3	1A	R121	A24A3-1	2B	A24A3	2A	R311	A24A3-1	1A	A24A3	1A
C110	A24A3-1	2B	A24A3	1A	C301	A24A3-1	2A	A24A3	1A	L230	A24A3-1	3B	A24A3	2A	R122	A24A3-1	2B	A24A3	2A	R312	A24A3-1	1A	A24A3	1A
C111	A24A3-1	2B	A24A3	1A	C310	A24A3-1	1A	A24A3	1A						R130	A24A3-1	2B	A24A3	2A	R313	A24A3-1	1A	A24A3	1A
C130	A24A3-1	3B	A24A3	2A	C340	A24A3-1	4C	A24A3	2A	Q110	A24A3-1	2B	A24A3	1A	R140	A24A3-1	3B	A24A3	2A	R340	A24A3-1	4C	A24A3	2A
C140	A24A3-1	3B	A24A3	2A	C341	A24A3-1	5C	A24A3	2A	Q130	A24A3-1	3B	A24A3	2A	R141	A24A3-1	4B	A24A3	2A	R341	A24A3-1	5C	A24A3	2A
C150	A24A3-1	4B	A24A3	2A	C342	A24A3-1	5C	A24A3	2A	Q220	A24A3-1	3A	A24A3	2A	R142	A24A3-1	3B	A24A3	2A	R342	A24A3-1	4C	A24A3	2A
C200	A24A3-1	1B	A24A3	1A	C350	A24A3-1	5B	A24A3	2A	Q250	A24A3-1	4B	A24A3	2A	R200	A24A3-1	1B	A24A3	1A	R343	A24A3-1	4C	A24A3	2A
C201	A24A3-1	1B	A24A3	1A	C440	A24A3-1	4C	A24A3	2A	Q300	A24A3-1	1A	A24A3	1A	R210	A24A3-1	2A	A24A3	1A	R344	A24A3-1	5C	A24A3	2A
C210	A24A3-1	2B	A24A3	1A						Q340	A24A3-1	4C	A24A3	2A	R220	A24A3-1	2A	A24A3	2A	R345	A24A3-1	4C	A24A3	2A
C220	A24A3-1	2A	A24A3	1A	CR600	A24A3-1	6B	A24A3	1B	Q440	A24A3-1	4C	A24A3	2A	R221	A24A3-1	2A	A24A3	2A	R440	A24A3-1	4C	A24A3	2A
C221	A24A3-1	3A	A24A3	2A											R230	A24A3-1	3B	A24A3	2A	R500	A24A3-1	5B	A24A3	1A
C230	A24A3-1	3B	A24A3	2A	J100	A24A3-1	1B	A24A3	1A	R100	A24A3-1	1B	A24A3	1A	R231	A24A3-1	2A	A24A3	2A	R512	A24A3-1	5B	A24A3	1B
C231	A24A3-1	3B	A24A3	2A	J110	A24A3-1	6A	A24A3	1A	R101	A24A3-1	1B	A24A3	1A	R250	A24A3-1	4B	A24A3	2A	R600	A24A3-1	5B	A24A3	1B
C232	A24A3-1	3B	A24A3	2A	J500	A24A3-1	6C	A24A3	1A	R102	A24A3-1	1B	A24A3	1A	R251	A24A3-1	4B	A24A3	2A	R601	A24A3-1	6B	A24A3	1B
C242	A24A3-1	4B	A24A3	2A						R120	A24A3-1	2B	A24A3	1A	R310	A24A3-1	1A	A24A3	1A	R602	A24A3-1	5B	A24A3	1B

Change Reference: M79006

2711 **B010387 and up**
2712 **B011473 and up**

REPLACEABLE MECHANICAL PARTS

Replaceable Mechanical Parts

This section contains a list of the replaceable mechanical components for the 2711 and 2712 spectrum analyzers. Use this list to identify and order replacement parts.

Parts Ordering Information

Replacement parts are available through your local Tektronix field office or representative.

Changes to Tektronix instruments are sometimes made to accommodate improved components as they become available and to give you the benefit of the latest circuit improvements. Therefore, when ordering parts, it is important to include the following information in your order.

- Part number
- Instrument type or model number
- Instrument serial number
- Instrument modification number, if applicable

If you order a part that has been replaced with a different or improved part, your local Tektronix field office or representative will contact you concerning any change in part number.

Change information, if any, is located at the rear of this manual.

Using the Replaceable Mechanical Parts List

The tabular information in the Replaceable Mechanical Parts List is arranged for quick retrieval. Understanding the structure and features of the list will help you find all of the information you need for ordering replacement parts. The following table describes the content of each column in the parts list.

Parts List Column Descriptions

Column	Column Name	Description
1	Figure & Index Number	Items in this section are referenced by figure and index numbers to the exploded view illustrations that follow.
2	Tektronix Part Number	Use this part number when ordering replacement parts from Tektronix.
3 and 4	Serial Number	Column three indicates the serial number at which the part was first effective. Column four indicates the serial number at which the part was discontinued. No entries indicates the part is good for all serial numbers.
5	Qty	This indicates the quantity of parts used.
6	Name & Description	An item name is separated from the description by a colon (:). Because of space limitations, an item name may sometimes appear as incomplete. Use the U.S. Federal Catalog handbook H6-1 for further item name identification.
7	Mfr. Code	This indicates the code of the actual manufacturer of the part.
8	Mfr. Part Number	This indicates the actual manufacturer's or vendor's part number.

Abbreviations

Abbreviations conform to American National Standard ANSI Y1.1–1972.

Chassis Parts

Chassis-mounted parts and cable assemblies are located at the end of the Replaceable Electrical Parts List.

Mfr. Code to Manufacturer Cross Index

The table titled Manufacturers Cross Index shows codes, names, and addresses of manufacturers or vendors of components listed in the parts list.

Manufacturers Cross Index

Mfr. Code	Manufacturer	Address	City, State, Zip Code
S3109	FELLER U.S. CORPORATION	72 Veronica Ave, Unit 4	Summerset NJ 08873
TK0392	NORTHWEST FASTENER SALES INC	8058 SW NIMBUS AVENUE	BEAVERTON OR 97008
TK0428	DLB INDUSTRIES		FRESNO CA
TK0435	LEWIS SCREW CO	4300 S RACINE AVE	CHICAGO IL 60609–3320
TK0860	LABEL GRAPHICS	6700 SW BRADBURY CT	PORTLAND OR 97224
TK0977	ELECTRICAL INSULATION SUPPLIERS, INC –(DIST)	3549 N W YEON	PORTLAND OR 97210
TK1181	SEA–TAC INDUSTRIES INC	1217 FOURTH AVE N	KENT WA 98031
TK1287	ENOCH MFG CO	14242 SE 82ND DR PO BOX 98	CLACKAMAS OR 97015
TK1326	NORTHWEST FOURSLIDE INC	18224 SW 100TH CT	TUALATIN OR 97062
TK1373	PATELEC–CEM	10156 TORINO	VAICENTALLO 62/45S ITALY
TK1423	WACHTEL CO INC THE (DIST)	1100–B L AVENIDA ST	MOUNTAIN VIEW CA 94043
TK1465	BEAVERTON PARTS MFG CO	1800 NW 216TH AVE	HILLSBORO OR 97124–6629

Manufacturers Cross Index (Cont.)

Mfr. Code	Manufacturer	Address	City, State, Zip Code
TK1499	AMLAN INC	97 THORNWOOD RD	STAMFORD CT 06903–2617
TK1547	MOORE ELECTRONICS INC (DIST)	19500 SW 90TH COURT PO BOX 1030	TUALATIN OR 97062
TK1564	GONSELS MACHINE SHOP	8710 G STREET	OAKLAND CA 94621
TK1623	STARKOR MFG	3454 NE HWY 101	LINCOLN CITY OR 97367
TK1828	LITE SPECIALTY METAL WORKS	20460 SW AVERY CT	TUALATIN OR 97062
TK1918	SHIN–ETSU POLYMER AMERICA INC	1181 NORTH 4TH ST	SAN JOSE CA 95112
TK1935	ACCRA–FAB INC	11007 NE 37TH CIRCLE	VANCOUVER WA 98682
TK1947	NORTHWEST ETCH TECHNOLOGY	2601 S HOOD ST PO BOX 110610	TACOMA, WA 98411–0610
TK2174	TETON MACHINE CO	1600 VALLEY RD	PAYETTE ID 83661
TK2379	FIBERBILT CASES INC	601 W 26TH STREET	NEW YORK NY 10001–1199
TK2469	UNITREK CORPORATION	3000 LEWIS & CLARK WAY SUITE #2	VANCOUVER WA 98601
TK2548	XEROX BUSINESS SERVICES DIV OF XEROX CORPORATION	14181 SW MILLIKAN WAY	BEAVERTON OR 97077
TK2562	MOLDING SPECIALITIES INC	3000 LEWIS & CLARK HWY	VANCOUVER, WA 98661–2999
TK2565	VISION PLASTICS INC	26000 SW PARKWAY CENTER DRIVE	WILSONVILLE, OR 97070
TK2582	TC CORPORATION	814 N HAYDEN MEADOWS DRIVE	PORTLAND, OR 97217
TK2606	VISPRO	PO BOX 6239	BEAVERTON, OR 97007
0B445	ELECTRI–CORD MFG CO INC	312 EAST MAIN ST	WESTFIELD PA 16950
0GV52	SCHAFFNER EMC INC	9–B FADEM ROAD	SPRINGFIELD, NJ 07081
0JR05	TRIQUEST CORP	3000 LEWIS AND CLARK HWY	VANCOUVER WA 98661–2999
0J260	COMTEK MANUFACTURING OF OREGON (METALS)	PO BOX 4200	BEAVERTON OR 97076–4200
0J7N4	ARCHER PRECISION SHEET METAL INC	10950 SW 5TH ST	BEAVERTON OR 97005
0J7N9	MCX INC	30608 SAN ANTONIO ST	HAYWARD CA 94544
0J848	CRYSTAL LITE MANFACTURING CO	11971 SW HERMAN RD	TUALATIN OR 97062–7062
0J9P4	DELTA ENGINEERING	19500 SW TETON	TUALATIN OR 97062
0J9P9	GEROME MFG CO INC	PO BOX 737 403 NORTH MAIN	NEWBERG OR 97132
0KBZ5	MORELLIS Q & D PLASTICS	1812 16TH AVE PO BOX 487	FOREST GROVE OR 97116–0487
0KB01	STAUFFER SUPPLY	810 SE SHERMAN	PORTLAND OR 97214
0KB05	NORTH STAR NAMEPLATE	5750 NE MOORE COURT	HILLSBORO OR 97124–6474
00779	AMP INC	2800 FULLING MILL PO BOX 3608	HARRISBURG PA 17105
02107			
04963	MINNESOTA MINING AND MFG CO ADHESIVES COATINGS AND SEALERS DIV	3M CENTER	ST PAUL MN 55101–1428
06383	PANDUIT CORP	17301 RIDGELAND	TINLEY PARK IL 60477–3048
06915	RICHCO PLASTIC CO	5825 N TRIPP AVE	CHICAGO IL 60646–6013

Manufacturers Cross Index (Cont.)

Mfr. Code	Manufacturer	Address	City, State, Zip Code
07416	NELSON NAME PLATE CO	3191 CASITAS	LOS ANGELES CA 90039–2410
12327	FREEWAY CORP	9301 ALLEN DR	CLEVELAND OH 44125–4632
12360	ALBANY FASTENERS PAWTUCKET FASTERNER DIV	327 PINE ST PO BOX 879	PAWTUCKET RI 02862
13103	THERMALLOY CO INC	2021 W VALLEY VIEW LN PO BOX 810839	DALLAS TX 75381
18565	CHOMERICS INC	77 DRAGON COURT	WOBURN MA 01801–1039
2K262	BOYD CORP	6136 NE 87th AVE PO BOX 20038	PORTLAND OR 97220
2W733	BELDEN WIRE & CABLE COMPANY	2200 US HIGHWAY 27 SOUTH PO BOX 1980	RICHMOND, IN 47374
24931	SPECIALTY CONNECTOR CO INC	2100 EARLYWOOD DR PO BOX 547	FRANKLIN IN 46131
3L462	QUALITY PLASTICS DIV. OF MOLL PLASTICRAFTERS L.P.	2101 CRESTVIEW DRIVE	NEWBERG, OR 97132–9518
5Y400	TRIAX METAL PRODUCTS INC DIV OF BEAVERTON PARTS MFG CO	1800 NW 216TH AVE	HILLSBORO OR 97124–6629
52750	ALAN INDUSTRIES INC	745 GREENWARY DR PO BOX 1203	COLUMBUS IN 47202–2210
57997	EMI PRECISION (FORMERLY ENGELCKE MFG INC)	20350 71ST AVENUE NE SUITE C	ARLINGTON, WA 98223
60050	SPIRA MANUFACTURING CORP	12721 SATICOY SOUTH	NORTH HOLLYWOOD CA 91605
61374	BUEHLER PRODUCTS INC	PS BOX 33400	RALEIGH NC 27606
61935	SCHURTER INC	1016 CLEGG COURT	PETALUMA CA 94952–1152
72653	GC ELECTRONICS CO SUB OF HOUSEHOLD INTERNATIONAL CORP	1801 MARGAN ST PO BOX 1209	ROCKFORD IL 61105–1209
73743	FISCHER SPECIAL MFG CO	111 INDUSTRIAL RD	COLD SPRING KY 41076–9749
73893			
75498	MULTICOMP INC	3005 SW 154TH TERRACE #3	BEAVERTON OR 97006
78189	ILLINOIS TOOL WORKS INC SHAKEPROOF DIV	ST CHARLES ROAD	ELGIN IL 60120
8X345	NORTHWEST SPRING & MFG CO	5858 SW WILLOW LANE	LAKE OSWEGO OR 97035
80009	TEKTRONIX INC	14150 SW KARL BRAUN DR PO BOX 500	BEAVERTON OR 97077–0001
85480	BRADY W H CO CORP H Q INDUSTRIAL PRODUCTS DIV	2221 W CAMDEN RD PO BOX 2131	MILWAUKEE WI 53209
86928	SEASTROM MFG CO INC	456 SEASTROM STREET	TWIN FALLS, ID 83301

Replaceable Mechanical Parts List

Fig. & Index Number	Tektronix Part Number	Serial No. Effective	Serial No. Discont'd	Qty	Name & Description	Mfr. Code	Mfr. Part Number
1–0	390–1118–00	B010230		1	CAB., WRAPAROUND: ALUMINUM (2711 ONLY. INCLUDES ITEMS 2, 5, 6 & 7)	TK1935	390–1118–00
	390–1118–00	B011140		1	CAB., WRAPAROUND: ALUMINUM (2712 ONLY. INCLUDES ITEMS 2, 5, 6, & 7)	TK1935	390–1118–00
–1	334–6524–00	B010100	B010229	1	OVERLAY, FR PNL: POLYCARBONATE	0KB05	334–6524–00
	334–6524–01	B010230		1	LABEL: POLYCARBONATE, 5.325 L (2711 ONLY)	0KB05	334–6524–01
	334–6524–00	B010100	B011139	1	OVERLAY, FR PNL: POLYCARBONATE	0KB05	334–6524–00
	334–6524–01	B010140		1	LABEL: POLYCARBONATE, 5.325 L (2712 ONLY)	0KB05	334–6524–01
–2	348–0659–00			2	FOOT, CABINET: BLACK POLYURETHANE	0JR05	ORDER BY DESC
–3	348–0991–00			4	FOOT, CABINET: FRONT, MOLDED BLACK POLYURETHENE	80009	348–0991–00
–4	211–0691–00			4	SCR, ASSEM WSHR: 6–32 X 0.625, PNH, STL, CDPL, T–15 TORX DR, MACHINE	0KB01	ORDER BY DESC
–5	367–0289–00	B010100	B010229	1	HANDLE, CARRYING: 13.855, SST	0JR05	ORDER BY DESC
	367–0289–02	B010230		1	HANDLE, CARRING: 13.855, DTT (2711 ONLY)	80009	367028902
	367–0289–00	B010100	B011139	1	HANDLE, CARRYING: 13.855, SST	0JR05	ORDER BY DESC
	367–0289–00	B011140		1	HANDLE, CARRYING: 13.855, SST (2712 ONLY)	0JR05	ORDER BY DESC
–6	212–0144–00			2	SCREW, TPG, TC: 8–16 X 0.562 L, PLASTITE, SPCL HD, TORX	0KB01	ORDER BY DESC
–7	390–0982–01	B010100	B010229	1	CAB., WRAPAROUND: ALUMINUM	0J260	390–0982–01
	390–1120–00	B010230		1	CAB, WRAPAROUND: WRAPAROUND ENCLOSURE (2711 ONLY. INCLUDES ITEMS 2, 5, & 6)	80009	390112000
				1	CAB., WRAPAROUND: ALUMINUM		
	390–0982–01	B010100	B011139	1	CAB, WRAPAROUND: WRAPAROUND ENCLOSURE	0J260	390–0982–01
	390–1120–00	B011140			(2712 ONLY. INCLUDES ITEMS 2, 5, & 6)	80009	390112000
–8	348–0990–00			2	FOOT, CABINET: REAR, MOLDED BLACK POLYURETHENE	0JR05	348–0990–00
–9	211–0711–00			4	SCR, ASSEM WSHR: 6–32 X 0.250, PNH, STL, CDPL, T–15 TORX DR, MACHINE	0KB01	ORDER BY DESC
–10	334–6639–01			1	OVERLAY, REAR PA: POLYCARBONATE, BACKED WITH A CRYLIC ADHESIVE	0KB05	334–6639–01
–11	200–3265–00			1	COVER, REAR: POLYCARBONATE,	3L462	200–3265–00
–12	211–0121–00			2	SCR, ASSEM WSHR: 4–40 X 0.438, PNH, BRS, NP, POZ	TK0435	ORDER BY DESC

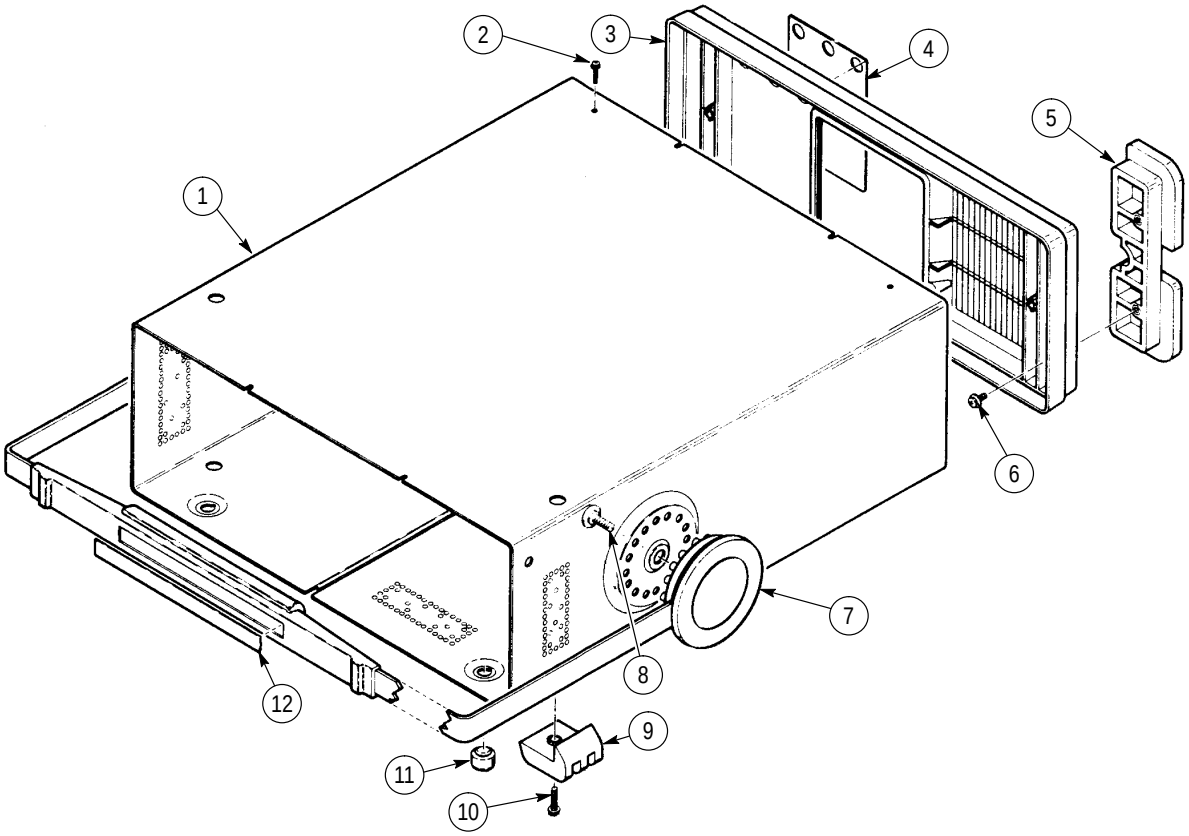

Figure 1: Cabinet

Replaceable Mechanical Parts List

Fig. & Index Number	Tektronix Part Number	Serial No. Effective	Serial No. Discont'd	Qty	Name & Description	Mfr. Code	Mfr. Part Number
2–1	348–0660–00			4	CUSHION, CRT: POLYURETHANE	80009	348066000
–2	386–6198–00			1	SUBPANEL, FRONT: POLYCARBONATE	80009	386619800
–3				1			
–4	441–1986–00			1	CHASSIS, FRONT: ALUNIMUM, 2712	5Y400	ORDER BY DESC
–5	213–0882–00			1	SCREW, TPG, TR: 6–32 X 0.437, PNH, STL, CDPL, TYPE TT, T–15 TORX DR	0KB01	ORDER BY DESC
–6	386–4443–00			1	SUPPORT, SHIELD: CRT, FRONT, PLASTIC	80009	386444300
			B031399		2711		
			B034199		2712		
	386–6911–00			1	SUPPORT, SHIELD:CRT SHIELD SUPPORT,PLASTIC	7X318	1365
		B041400			2711		
		B044200			2712		
–7	337–3487–00			1	SHIELD, ELEC: CRT, STL	0J9P9	337–3487–00
			B031399		2711		
			B034199		2712		
	337–4114–00			1	SHIELD,ELEC:CRT SHIELD,ELEC,0.014 STEEL,MOLY	80009	337–4114–00
		B041400			2711		
		B044200			2712		
–8	334–1951–00			1	MARKER, IDENT: MKD WARNING, CRT VOLTAGES	TK0860	ORDER BY DESC
–9	334–1379–00			1	MARKER, IDENT: MKD HI VACUUM	07416	ORDER BY DESC
–10	441–1863–01			1	CHASSIS, REF: CARD CAGE	5Y400	ORDER BY DESC
			B031399		2711		
			B034199		2712		
	441–2120–00			1	CHASSIS,REF:CARD CAGE REFERENCE OSCILLATOR	80009	441–2120–00
		B041400			2711		
		B044200			2712		
–11	210–0586–00			2	NUT, PL, ASSEM WA: 4–40 X 0.25, STL CD PL	TK0435	ORDER BY DESC
–12	407–3723–00			1	BRACKET, MTG: ALUMINUM	TK1935	407–3723–00
–13	211–0711–00			2	SCR, ASSEM WSHR: 6–32 X 0.250, PNH, STL, CDPL, T–15 TORX DR, MACHINE	0KB01	ORDER BY DESC
–14	337–3497–00			1	SHIELD, ELEC: 2710, 100MHZ	TK1947	337–3497–00
–15	342–0855–00			1	INSULATOR, OVEN: NEOPENE LATEX FOAM, 0.75 DIA, 0.075 THK	2K262	342–0855–00
–16	342–0856–00			1	INSULATOR, PLATE: NEOPRENE LATEX FOAM, W/ ADHESIVE, 1.4 X 1.5 X 0.125 THK	2K262	342–0856–00
–17	211–0097–00			1	SCREW, MACHINE: 4–40 X 0.312, PNH, STL	TK0435	ORDER BY DESC
–18					CKT BOARD ASSY; REF OSC. (SEE A21 REPL)		
–19	337–3496–00			1	SHIELD, ELEC: BACK, 100MHZ, BRASS	TK1947	337–3496–00
–20	211–0541–00			3	SCREW, MACHINE: 6–32 X 0.25, FLH, 100 DEG, STL	TK0435	ORDER BY DESC
–21	351–0303–00			5	GUIDE, CKT BOARD: T4002A, POLYCARBONATE, SILVER GRAY	80009	351030300
–22	211–0711–00			2	SCR, ASSEM WSHR: 6–32 X 0.250, PNH, STL, CDPL, T–15 TORX DR, MACHINE	0KB01	ORDER BY DESC
–23					CKT BOARD ASSY; SWEEP (SEE A5 REPL)		

Replaceable Mechanical Parts List (Cont.)

Fig. & Index Number	Tektronix Part Number	Serial No. Effective	Serial No. Discont'd	Qty	Name & Description	Mfr. Code	Mfr. Part Number
–24	211–0711–00			2	SCR, ASSEM WSHR: 6–32 X 0.250, PNH, STL, CDPL, T–15 TORX DR, MACHINE	0KB01	ORDER BY DESC
			B031399		2711		
			B034199		2712		
	211–0622–00			2	SCREW,MACHINE:6–32 X 0.188,TRH,SST POZ	0KB01	ORDER BY DESCRIPTION
		B041400			2711		
		B044200			2712		
–25	385–0080–00			2	SPACER, POST: 0.437 L W/6–32 THD THRU, AL 0.25 HEX	TK2174	385–0080–00
–26					CABLE ASSY, ELEC (SEE W25 REPL)		
–27	210–0457–00			1	NUT, PL, ASSEM WA: 6–32 X 0.312, STL CD PL	TK0435	ORDER BY DESC
–28	211–0541–00			2	SCREW, MACHINE: 6–32 X 0.25, FLH, 100 DEG, STL	TK0435	ORDER BY DESC
–29	211–0711–00			2	SCR, ASSEM WSHR: 6–32 X 0.250, PNH, STL, CDPL, T–15 TORX DR, MACHINE	0KB01	ORDER BY DESC
–30	407–4058–00			1	BRACKET, MTG: ALUMINUM, FRONT	5Y400	ORDER BY DESC
–31	211–0512–00			1	SCREW, MACHINE: 6–32 X 0.5, FLH, 100 DEG, STL CD PL POZ	TK0435	ORDER BY DESC
–32	211–0711–00			1	SCR, ASSEM WSHR: 6–32 X 0.250, PNH, STL, CDPL, T–15 TORX DR, MACHINE	0KB01	ORDER BY DESC
–33	210–0993–00			1	WASHER, FLAT: 0.143 ID X 0.75 OD X 0.051, BRS	86928	ORDER BY DESC
–34	361–1588–00			2	SPACER, CONN: 1.14 X 1.04 X 0.54	5Y400	ORDER BY DESC
–35	174–0199–01			1	CA ASSY, SP, ELEC: SEMI–RIGID	TK2469	174–0199–01
–36				1	(PART OF FIGURE AND INDEX 2-35)	TK2469	174–0199–01
–37	210–1365–00			2	WASHER, FLAT: 0.141 ID X 0.266 OD X 0.5, AL	0KB01	ORDER BY DESC
–38					LOUDSPEAKER, PM (SEE LS103 REPL)		
–39	211–0622–00			2	SCREW, MACHINE: 6–32 X 0.188, TRH, SST	TK0435	MACHINE SCREW:
–40				1	JACK, TELEPHONE (SEE J102 REPL)		
–41	129–0285–00			4	SPACER, POST: 0.281 L, 4–40 THRU, BRS, CU SN ZN PL, 0.188 HEX	80009	129028500
–42	210–1365–00			4	WASHER, FLAT: 0.141 ID X 0.266 OD X 0.5, AL	0KB01	ORDER BY DESC
–43	211–0541–00			8	SCREW, MACHINE: 6–32 X 0.25, FLH, 100 DEG, STL	TK0435	ORDER BY DESC
–44					RESISTOR, VAR (SEE R480 REPL)		
–45					RES, VAR, NONWW (SEE R360 REPL)		
–46					ENCODER, DIGITAL (SEE A6SW260 REPL)		
–47					CKT BOARD ASSY; FRONT PANEL (SEE A6 REPL)		
–48	260–2546–00			1	SWITCH ASSEMBLY: KEYPAD, 2712, ELASTOMER	TK1918	ORDER BY DESC
–49	119–4083–00	B010100	B010146	1	SWITCH SUB ASSY: 2712	80009	119408300
	366–0742–00	B010147		1	PUSH BUTTON AS: FRONT PANEL (2712 ONLY)	0JR05	ORDER BY DESC
	366–0742–00			1	PUSH BUTTON AS: FRONT PANEL (2711 ONLY)	0JR05	ORDER BY DESC
–50	344–0423–00			9	CLIP, RETAINING: 2712 FRONT PANEL/KYBD ASSY	0KBZ5	334–0423–00
–51	333–3917–00			1	PANEL, FRONT: 2712 (PART OF FIGURE AND INDEX 2–38)	0KB05	333–3917–00
–52	200–3416–00			1	COVER, TG PORT: PLASTIC	3L462	200–3416–00

Replaceable Mechanical Parts List (Cont.)

Fig. & Index Number	Tektronix Part Number	Serial No. Effective	Serial No. Discont'd	Qty	Name & Description	Mfr. Code	Mfr. Part Number
–53	210–0046–00			1	WASHER, LOCK: 0.261 ID, INTL, 0.018 THK, STL	78189	1214–05–00–0541
–54	210–0583–00			1	NUT, PLAIN, HEX: 0.25–32 X 0.312, BRS CD PL	73743	2X–20319–402
–55	366–1326–01			1	KNOB: GRAY, 0.127 ID X 0.588 OD X0.6 H	80009	366–1326–01
–56	366–1696–01			1	KNOB: GRAY, 0.82 ID X 0.588 OD X 0.6 H	80009	366–1696–01
–57	366–1708–03			1	KNOB: SIL GY, 0.127 ID X 0.5 OD X0.531 H	0JR05	ORDER BY DESC
–58	210–0590–00			1	NUT, PLAIN, HEX: 0.375–32 X 0.438 BRS CD PL	73743	28269–402
–59	210–0046–00			1	WASHER, LOCK: 0.261 ID, INTL, 0.018 THK, STL	78189	1214–05–00–0541
–60	211–0690–01			2	SCREW, MACHINE: 6–32 X 0.875 PNH, SST	0KB01	ORDER BY DESC
–61	334–8041–00			1	MARKER, IDENT: 2712 (2712 ONLY)	0KB05	334–8041–00
	334–8312–00			1	MARKER, IDENT: MARKED TEKTRONIX 2711 (2711 ONLY)	0KB05	334–8312–00
–62	426–1765–02			1	FRAME, CRT: POLYCARBONATE, GRAY	0JR05	ORDER BY DESC
–63	337–2775–00			1	SHLD, IMPLOSION: FILTER, BLUE 2211/2213/2215SA FETY CONTROLLED	0JR05	ORDER BY DESC
–64	366–1782–02			1	SHELL, KNOB: MOLDED PLASTIC	80009	366–1782–02
–65	210–0590–00			1	NUT, PLAIN, HEX: 0.375–32 X 0.438 BRS CD PL	73743	28269–402
–66	210–0994–00			1	WASHER, FLAT: 0.125 ID X 0.25 OD X 0.022, STL	12327	ORDER BY DESC

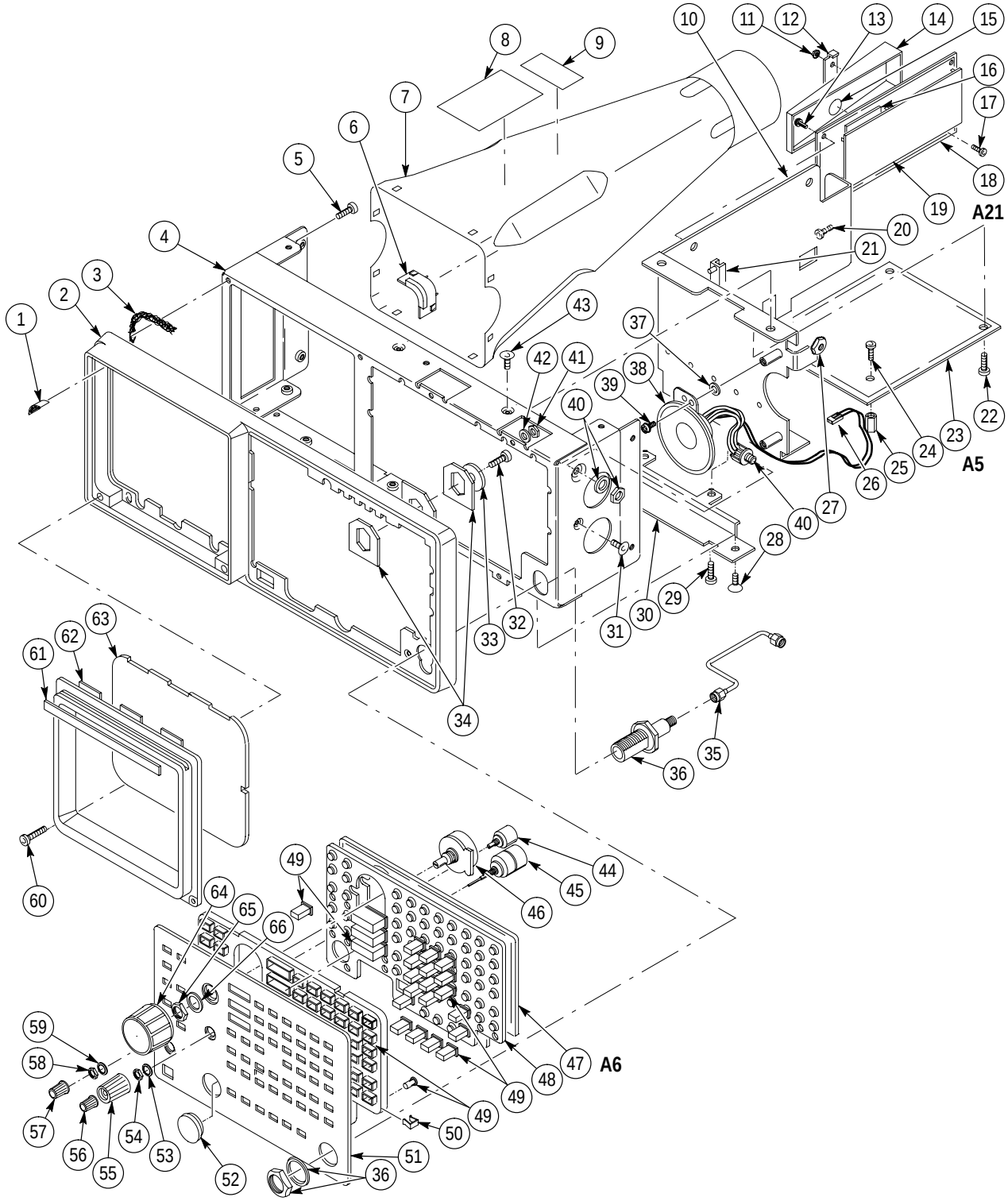

Figure 2: Front panel

Replaceable Mechanical Parts List

Fig. & Index Number	Tektronix Part Number	Serial No. Effective	Serial No. Discont'd	Qty	Name & Description	Mfr. Code	Mfr. Part Number
3–1	174–0188–01			1	CABLE ASSY, RF: 50 OHM COAX, 9.0 L, RIBBON W/O TAG (W2 ON INTERCONNECT DIAGRAM)	TK2469	174–0188–02
–2	348–0090–00	B041400 B044200		1	PAD,CUSHIONING 2.03 X 0.69 X 0.312 SI RBR , CUT TO 1/3 LENGTH FOR THIS USE		348–0090–00
–3	174–2551–00		B031399 B034199	1	CA ASSY, SP, ELEC: RIBBON W/CRT SOCKET (W1 ON INTERCONNECT DIAGRAM) 2711 2712	80009	174255100
	174–3740–00	B041400 B044200		1	CA ASSY,SP:RIBBON,IDC,10,28AWG,6.0 L,2X5,0.1CTR,PCB X 4X5,0.1CTR,PCB, 2711 2712	TK2469	174–3740–00
–4	200–1388–03			1	COVER, FUSE LEAD: POLYURETHANE	0JR05	ORDER BY DESC
–5					(PART OF FIGURE AND INDEX 3–18)		
–6	————			1	MODULE, HV: 3KVAC INPUT, 12KVDC ANODEOUT, –3K VDC CATHODE OUT (SEE A15W3 REPL)		
–7	210–0586–00			4	NUT, PL, ASSEM WA: 4–40 X 0.25, STL CD PL	TK0435	ORDER BY DESC
–8	343–1502–00			4	CLAMP, CABLE: 0.188 ID X 0.25 W, 0.141 MOUNTING HOLE, BLACK NYLON	TK0977	343–1502–00
–9	211–0711–00			4	SCR, ASSEM WSHR: 6–32 X 0.250, PNH, STL, CDPL, T–15 TORX DR, MACHINE	0KB01	ORDER BY DESC
–10	210–0011–00			2	WASHER, LOCK: 0.25 ID, INTL, 0.025 THK, STL CD PL	78189	1214–00–00–0541
–11	358–0251–00			2	BUSHING, VAR RES: 0.25–32 X 0.424 L, BRS NP	80009	358025100
–12	————			1	CA ASSY, SP, ELEC: 9 COND, SHIELDED, IDC CABLE, D–SUB TO 2 X 5 (SEE A15W3 REPL)		
–13	200–3506–00			1	COVER, CRT: REAR	0J9P9	ORDER BY DESC
–14	358–0251–00			1	BUSHING, VAR RES: 0.25–32 X 0.424 L, BRS NP	80009	358025100
–15	210–0586–00			1	NUT, PL, ASSEM WA: 4–40 X 0.25, STL CD PL	TK0435	ORDER BY DESC
–16	131–0890–00			2	CONN, HARDWARE: DSUB, JACK SCREW; 4–40 X 0.312 L HEX HD, STL CD PL, W/2 FLAT WASHERS, 1 LOCK WASHER, 4–40 NUT, 2 JACKSCREW/ASSY	0KB01	131–0890–00
–17	334–8164–00			1	MARKER, IDENT: MKD UL DCSA CERTIFICATION SAFETY CONTROLLED	0KB05	334–8164–00
–18	211–0541–00			2	SCREW, MACHINE: 6–32 X 0.25, FLH, 100 DEG, STL	TK0435	ORDER BY DESC
–19	204–0833–00			1	BODY, FUSEHOLDER: 3AG & 5 X 20MM FUSES	61935	031 1653 (MODEL
–20	200–2264–00			1	CAP, FUSEHOLDER: 3AG FUSES	61935	FEK 031 1666
–21	214–2871–00			2	HARDWARE KIT: STANDOFF , STUD MOUNT W/NUT & LOCKWASHER	00779	552633–3
–22	174–1822–00			1	CA ASSY, SP, ELEC: 24, 24 AWG, 16.0 L, RIBBON, PNL MT X 2 X 12 RCPT	0J7N9	174–1822–00
–23	210–0586–00	B022732		2	NUT, PL, ASSEM WA: 4–40 X 0.25, STL CD PL (2712)	TK0435	ORDER BY DESC
		B020816		2	NUT, PL, ASSEM WA: 4–40 X 0.25, STL CD PL (2711)		

Replaceable Mechanical Parts List (Cont.)

Fig. & Index Number	Tektronix Part Number	Serial No. Effective	Serial No. Discont'd	Qty	Name & Description	Mfr. Code	Mfr. Part Number
–24	337–3805–01	B022732		1	SHIELD, FAN: EMI, SHIELD .030 ALUMINUM WITH CHROMATE CONVERSION COATING (2712)	80009	337380501
		B020816		1	SHIELD, FAN: EMI, SHIELD .030 ALUMINUM WITH CHROMATE CONVERSION COATING (2711)		
–25	211–0121–00			2	SCR, ASSEM WSHR: 4–40 X 0.438, PNH, BRS, NP, POZ	TK0435	ORDER BY DESC
–26	134–0026–00			1	BUTTON, PLUG: U/W 0.375 HOLE	72653	11–352
–27	119–3299–00			1	FILTER: POWER LINE, RTANG	0GV52	FX326–3/07
–28	211–0529–00	B022732		2	SCREW, MACHINE: 6–32 X 1.250, PNH, STL (2712)	TK0435	ORDER BY DESC
		B020816		2	SCREW, MACHINE: 6–32 X 1.250, PNH, STL (2711)		
–29	211–0661–00	B022732		4	SCR, ASSEM WSHR: 4–40 X 0.25, PNH, STL, CD PL, POZ, MACHINE (2712)	TK0435	ORDER BY DESC
		B020816		4	SCR, ASSEM WSHR: 4–40 X 0.25, PNH, STL, CD PL, POZ, MACHINE (2711)		
–30	214–4704–00	B022732		2	SPRING: 0.020 BERYLLIUM COPPER W/ELECTROLESS NICKEL PLATE, SPRING FAN MOUNT (2712)	TK1947	214–4704–00
		B020816		2	SPRING: 0.020 BERYLLIUM COPPER W/ELECTROLESS NICKEL PLATE, SPRING FAN MOUNT (2711)		
–31	441–1931–01	B022732		1	CHASSIS, REAR: REAR CHASSIS .050 ALUMINUM 5052, (2712)	80009	441193101
		B020816		1	CHASSIS, REAR: REAR CHASSIS .050 ALUMINUM 5052, (2711)		
–32				1	BNC	0J7N9	174–1822–00
–33	174–1822–00			1	CA ASSY, SP, ELEC: 24, 24 AWG, 16.0 L, RIBBON, PNL MT X 2 X 12 RCPT	0J7N9	174–1822–00
–34	386–6132–00			1	PLATE, MOUNTING: GPIB, AL (2711 NOT OPTION 03 AND 2712 NOT OPTION 08)	5Y400	386–6132–00
	386–6209–00	B010100	B010197	1	PLATE, MTG: ALUMINUM	5Y400	ORDER BY DESC
	386–6209–01	B010198		1	PLATE, MOUNTING: ALUMINUM (2711 OPTION 08 ONLY)	5Y400	380–3209–01
	386–6209–00	B010100	B011028	1	PLATE, MTG: ALUMINUM	5Y400	ORDER BY DESC
	386–6209–01	B011029		1	PLATE, MOUNTING: ALUMINUM (2712 OPTION 08 ONLY)	5Y400	380–3209–01
	200–3432–00			1	COVER, PLATE: ALUMINUM (2711 NOT OPTION 03 OR NOT OPTION 08 ONLY)	0J848	200–3432–00
–35	210–0204–00			1	TERMINAL, LUG: 0.142 ID, LOCKING, BRZ TINNED	86928	A373–175
–36	210–0586–00	B022732		1	NUT, PL, ASSEM WA: 4–40 X 0.25, STL CD PL (2712)	TK0435	ORDER BY DESC
		B020816		1	NUT, PL, ASSEM WA: 4–40 X 0.25, STL CD PL (2711)		
–37	119–5081–00	B022732		1	FAN, DC: TUBEAXIAL; 12V, 60MM X 60MM X 25.5MM, 17.65CFM, 42DBA, 3.24W, 0.27A (2712)	80009	119508100
		B020816		1	FAN, DC: TUBEAXIAL; 12V, 60MM X 60MM X 25.5MM, 17.65CFM, 42DBA, 3.24W, 0.27A (2711)		

Replaceable Mechanical Parts List (Cont.)

Fig. & Index Number	Tektronix Part Number	Serial No. Effective	Serial No. Discont'd	Qty	Name & Description	Mfr. Code	Mfr. Part Number
–38	210–0457–00	B022732		2	NUT, PL, ASSEM WA: 6–32 X 0.312, STL CD PL (2712)	TK0435	ORDER BY DESC
		B020816		2	NUT, PL, ASSEM WA: 6–32 X 0.312, STL CD PL (2711)		
–39	214–4129–01			1	BRACKET, HEAT SK: ALUMINUM	0J260	214–4129–01
–40	343–0007–00			1	CLAMP, LOOP: 0.625 ID, PLASTIC	06915	N10B
–41	210–0863–00			1	WSHR, LOOP CLAMP: 0.091 ID U/W 0.5 W CLP, STLC D PL	85480	C191
–42				1		85480	C191
–43	211–0014–00			1	SCREW, MACHINE: 4–40 X 0.5, PNH, STL	TK0435	ORDER BY DESC
–44	342–0536–00			1	INSULATOR, XSTR: TO–220, POLYENELENE	TK2562	342–0536–00
	211–0658–00	B010100	B010240	1	SCR, ASSEM WSHR: 6–32 X 0.312, PNH, STL, POZ	TK0435	17691–300
	211–0602–00	B010241		1	SCR, ASSEM WSHR: 6–32 X 0.438, PNH, BRS NP, POZ (2711 ONLY)	TK0435	ORDER BY DESC
	211–0658–00	B010100	B011163	1	SCR, ASSEM WSHR: 6–32 X 0.312, PNH, STL, POZ	TK0435	17691–300
	211–0602–00	B011164		1	SCR, ASSEM WSHR: 6–32 X 0.438, PNH, BRS NP, POZ (2712 ONLY)	TK0435	ORDER BY DESC
–45	342–0420–00			1	INSULATOR, PLATE: TRANSISTOR PORCELAIN	TK2606	342–0420–00
–46	210–0586–00			2	NUT, PL, ASSEM WA: 4–40 X 0.25, STL CD PL	TK0435	ORDER BY DESC
–47	407–4115–00			1	BRKT, HEAT SINK: ALUMINUM	0J9P9	ORDER BY DESC
–48	343–1397–00			1	RETAINER, TRANS: NATURAL	80009	343139700
–49	210–1001–00			1	WASHER, FLAT: 0.119 ID X 0.375 OD X 0.021, BRS	12360	ORDER BY DESC
–50	211–0302–00			1	SCR, ASSEM WSHR: 4–40 X 0.750, PNH, STL, CDPL, T–10 TORX DR, MACHINE	0KB01	ORDER BY DESC
–51	344–0445–00			2	CLIP, SPRING: TENSION, PHOSPHOR BRONZECU–SN–ZN	8X345	344–0445–00
–52	210–0586–00			2	NUT, PL, ASSEM WA: 4–40 X 0.25, STL CD PL	TK0435	ORDER BY DESC
–53	384–1136–00			1	EXTENSION SHAFT: 0.95 INCH LONG	0JR05	ORDER BY DESC
–54	441–1708–01		B010119	1	CHAS, INNER REAR: ALUNINUM, 2710	0J260	441–1708–01
			B010709	1	CHASSIS, REAR: INTERCONNECT, ALUMINUM		
	441–1708–02	B010120	B031399		2711	0J9P9	441–1708–02
		B010710	B034199		2712		
	441–2121–00			1	CHASSIS,REAR:REAR INTERCONNECT CHASSIS,0.050 ALUM,W/GROMMET & 9 STANDOFFS,271X,	80009	441–2121–00
		B041400			2711		
		B044200			2712		
–55					CKT BOARD ASSY; POWER SUPPLY (SEE A15A1 REPL)		
–56	211–0711–00			7	SCR, ASSEM WSHR: 6–32 X 0.250, PNH, STL, CDPL, T–15 TORX DR, MACHINE	0KB01	ORDER BY DESC
–57	337–3772–01			1	SHIELD, ELEC: POLYCARBONATE	2K262	ORDER BY DESC
–58	210–0910–00			2	WASHER, FLAT: 0.19 OD X 0.281 OD X 0.046 TEFLON	02107	S–47–11
–59	214–3012–00			2	FSTNR, SNAP–IN: 0.437 L X 0.3 DIA, ROUND HD	TK1423	214–3012–00
–60	211–0711–00			5	SCR, ASSEM WSHR: 6–32 X 0.250, PNH, STL, CDPL, T–15 TORX DR, MACHINE	0KB01	ORDER BY DESC
–61	211–0121–00			1	SCR, ASSEM WSHR: 4–40 X 0.438, PNH, BRS, NP, POZ	TK0435	ORDER BY DESC

Replaceable Mechanical Parts List (Cont.)

Fig. & Index Number	Tektronix Part Number	Serial No. Effective	Serial No. Discont'd	Qty	Name & Description	Mfr. Code	Mfr. Part Number
–62	211–0116–00 210–1178–00			1 1	SCR, ASSEM WSHR: 4–40 X 0.312, PNH, BRS, NP, POZ WASHER, SHLDR: U/W TO–220 TRANSISTOR	TK0435 13103	ORDER BY DESC 7721–7PPS
–63	342–0563–00			1	INSULATOR, PLATE: TRANSISTOR, FIBERGLASS REINFORCED SILICON RUBBER	18565	69–11–8805–1674
–64	334–4251–00			1	MARKER, IDENT: MKD CAUTION	07416	ORDER BY DESC
–65	211–0121–00			2	SCR, ASSEM WSHR: 4–40 X 0.438, PNH, BRS, NP, POZ	TK0435	ORDER BY DESC
–66	342–0563–00			1	INSULATOR, PLATE: TRANSISTOR, FIBERGLASS REINFORCED SILICON RUBBER	18565	69–11–8805–1674
–67	214–4467–00			1	HEAT SINK, XSTR: MACHINED ALUMINUM	TK1828	ORDER BY DESC
–68	348–0502–00			1	FOOT, CABINET: GRAY RUBBER	04963	SJ–5023 GRAY
–69	211–0711–00			3	SCR, ASSEM WSHR: 6–32 X 0.250, PNH, STL, CDPL, T–15 TORX DR, MACHINE	0KB01	ORDER BY DESC
–70	384–1058–00			1	EXTENSION SHAFT: 8.157 L	0JR05	ORDER BY DESC
–71	384–1061–00			1	EXTENSION SHAFT: 4.357 L	0JR05	ORDER BY DESC
–72	366–1480–03			1	PUSH BUTTON: BLACK, OFF	0JR05	ORDER BY DESC
–73	351–0303–00			11	GUIDE, CKT BOARD: T4002A, POLYCARBONATE, SILVER GRAY	80009	351030300
–74	348–0145–00			2	GROMMET, PLASTIC: GRAY, U SHAPE, 0.48 ID	0JR05	ORDER BY DESC
–75	255–0581–00			AR	PLASTIC CHANNEL:0.156 X 0.156,POLYETHYLENE	TK1643	ORDER BY DESC
–76	342–0563–00			4	INSULATOR, PLATE: TRANSISTOR, FIBERGLASS REINFORCED SILICON RUBBER	18565	69–11–8805–1674
–77	210–1178–00			4	WASHER, SHLDR: U/W TO–220 TRANSISTOR	13103	7721–7PPS
–78	211–0116–00			4	SCR, ASSEM WSHR: 4–40 X 0.312, PNH, BRS, NP, POZ	TK0435	ORDER BY DESC

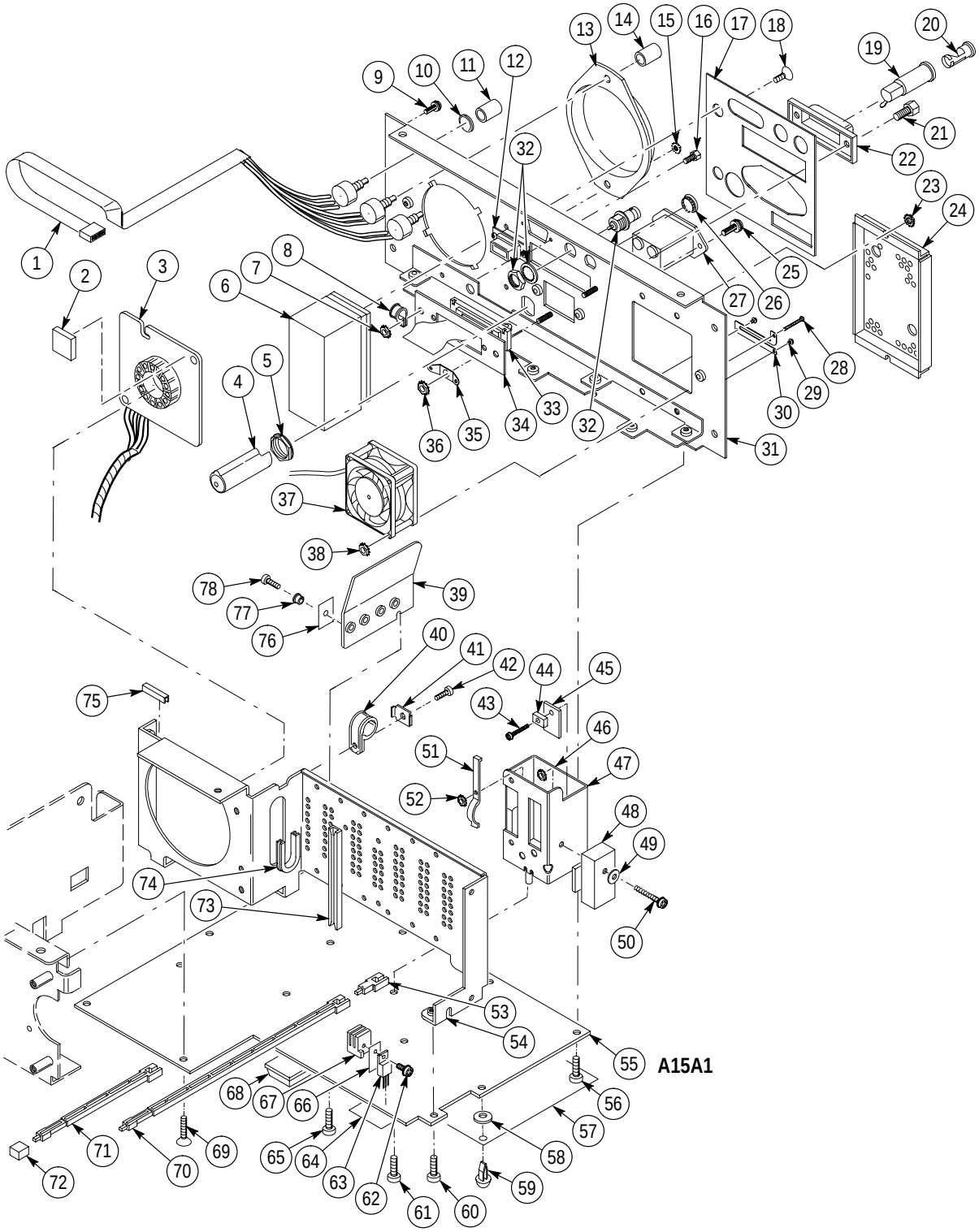

Figure 3: Power supply

Replaceable Mechanical Parts List

Fig. & Index Number	Tektronix Part Number	Serial No. Effective	Serial No. Discont'd	Qty	Name & Description	Mfr. Code	Mfr. Part Number
4–1					FILTER, LOW PASS (SEE FL16 REPL)		
–2	352–0482–00			1	HOLDER, CA TIE: 0.75 SQ, STICKY BACK, PLASTIC	06383	ABMM–AT–D
–3	210–0206–00			1	TERMINAL, LUG: 0.2 ID, LOCKING, BRZ TINNED	0KB01	OBD
–4					YIG BUFFER ASSY (SEE A17 REPL)		
–5	210–0586–00			2	NUT, PL, ASSEM WA: 4–40 X 0.25, STL CD PL	TK0435	ORDER BY DESC
–6	210–0994–00			2	WASHER, FLAT: 0.125 ID X 0.25 OD X 0.022, STL	12327	ORDER BY DESC
–7	210–0940–00			1	WASHER, FLAT: 0.25 ID X 0.375 OD X 0.02, STL	12327	ORDER BY DESC
–8	441–1710–00	B010100	B020485	1	CHASSIS, RF: ALUMINUM	0J9P4	441–1710–00
	441–1710–01	B020486		1	CHASSIS, RF (2711 ONLY)	80009	441171001
	441–1710–00	B010100	B021781	1	CHASSIS, RF: ALUMINUM	0J9P4	441–1710–00
	441–1710–01	B021782		1	CHASSIS, RF (2712 ONLY)	80009	441171001
–9					CKT BOARD ASSY; RF MOM (SEE A14A1 REPL)		
–10					FILTER, 110MHZ (SEE FL180 REPL)		
–11					CKT BOARD ASSY: LOCKED 2ND LO (SEE A14A2 REPL)		
–12	211–0162–00			14	SCREW, MACHINE: 2–56 X 0.188, SCH, SST	TK0428	ORDER BY DESC
–13	211–0162–00			4	SCREW, MACHINE: 2–56 X 0.188, SCH, SST	TK0428	ORDER BY DESC
–14	200–3716–00			1	COVER, HOUSING: RF MOM	TK1564	200–3716–00
–15	211–0503–00			3	SCREW, MACHINE: 6–32 X 0.188, PNH, STL	TK0435	ORDER BY DESC
–16	200–3514–01	B010100	B010128	1	COVER, RF: ALUMINUM	0J260	200–3514–01
	200–3514–02	B010129	B020754	1	COVER, RF: ALUMINUM	0J7N4	200–3514–02
	200–3514–03	B020755		1	COVER: COVER, RF, METAL, 2711 (2711 ONLY)	0J7N4	200–3514–03
	200–3514–01	B010100	B010780	1	COVER, RF: ALUMINUM	0J260	200–3514–01
	200–3514–02	B010781	B022577	1	COVER, RF: ALUMINUM	0J7N4	200–3514–02
	200–3514–02	B022578		1	COVER, RF: ALUMINUM (2712 ONLY)	0J7N4	200–3514–02
–17	211–0622–00			3	SCREW, MACHINE: 6–32 X 0.188, TRH, SST	TK0435	MACHINE SCREW:
–18	380–0945–00			1	HOUSING, CKT BD: RF MOM	TK1564	380–0945–00
–19	211–0661–00			4	SCR, ASSEM WSHR: 4–40 X 0.25, PNH, STL, CD PL, POZ, MACHINE	TK0435	ORDER BY DESC
–20					1ST CONVERTER ASSY (SEE A16 REPL)		
–21	211–0031–00			4	SCREW, MACHINE: 4–40 X 1.0, FLH, 100 DEG, STL CD PL, PHILLIPS	73893	ORDER BY DESC
–22					CKT BOARD ASSY; RF ATTN (SEE A18 REPL)		
–23	337–3437–00			1	SHIELD, ELEC: YIG, BOTTOM	0J9P9	337–3437–00
–24	352–0797–00			1	HOLDER, YIG: SST	0J9P4	352–0797–00
–25	211–0512–00			1	SCREW, MACHINE: 6–32 X 0.5, FLH, 100 DEG, STL CD PL POZ	TK0435	ORDER BY DESC
–26	211–0512–00			2	SCREW, MACHINE: 6–32 X 0.5, FLH, 100 DEG, STL CD PL POZ	TK0435	ORDER BY DESC
–27	386–5665–00			1	NUT PLATE: ALUMINUM	0J848	386–5665–00
–28	210–0457–00			4	NUT, PL, ASSEM WA: 6–32 X 0.312, STL CD PL	TK0435	ORDER BY DESC
–29	343–1260–00			1	CLAMP, YIG: SST	0J9P4	343–1260–00

Replaceable Mechanical Parts List (Cont.)

Fig. & Index Number	Tektronix Part Number	Serial No. Effective	Serial No. Discont'd	Qty	Name & Description	Mfr. Code	Mfr. Part Number
–30	337–3436–00			1	SHIELD, ELEC: YIG, TOP	80009	337343600
–31	211–0541–00			8	SCREW, MACHINE: 6–32 X 0.25, FLH, 100 DEG, STL	TK0435	ORDER BY DESC
–32	361–1496–00			4	SPACER, SLEEVE: 0.120 L X 0.250 ID, ALUMINUM	0J260	361–1496–00
–33	211–0541–00			4	SCREW, MACHINE: 6–32 X 0.25, FLH, 100 DEG, STL	TK0435	ORDER BY DESC
–34	210–0940–00			4	WASHER, FLAT: 0.25 ID X 0.375 OD X 0.02, STL	12327	ORDER BY DESC
–35	220–0531–02			5	NUT, PLAIN, HEX: 0.25–36 X 0.312 HEX, BRS NP	0KB01	220–0531–02
–36					1ST IF FILTER (SEE FL17 REPL)		
–37	343–0549–00			1	STRAP, TIEDOWN, E: 0.098 W X 4.0 L, ZYTEL	TK1499	HW–047
–38					FILTER, LOW PASS (SEE FL16 REPL)		

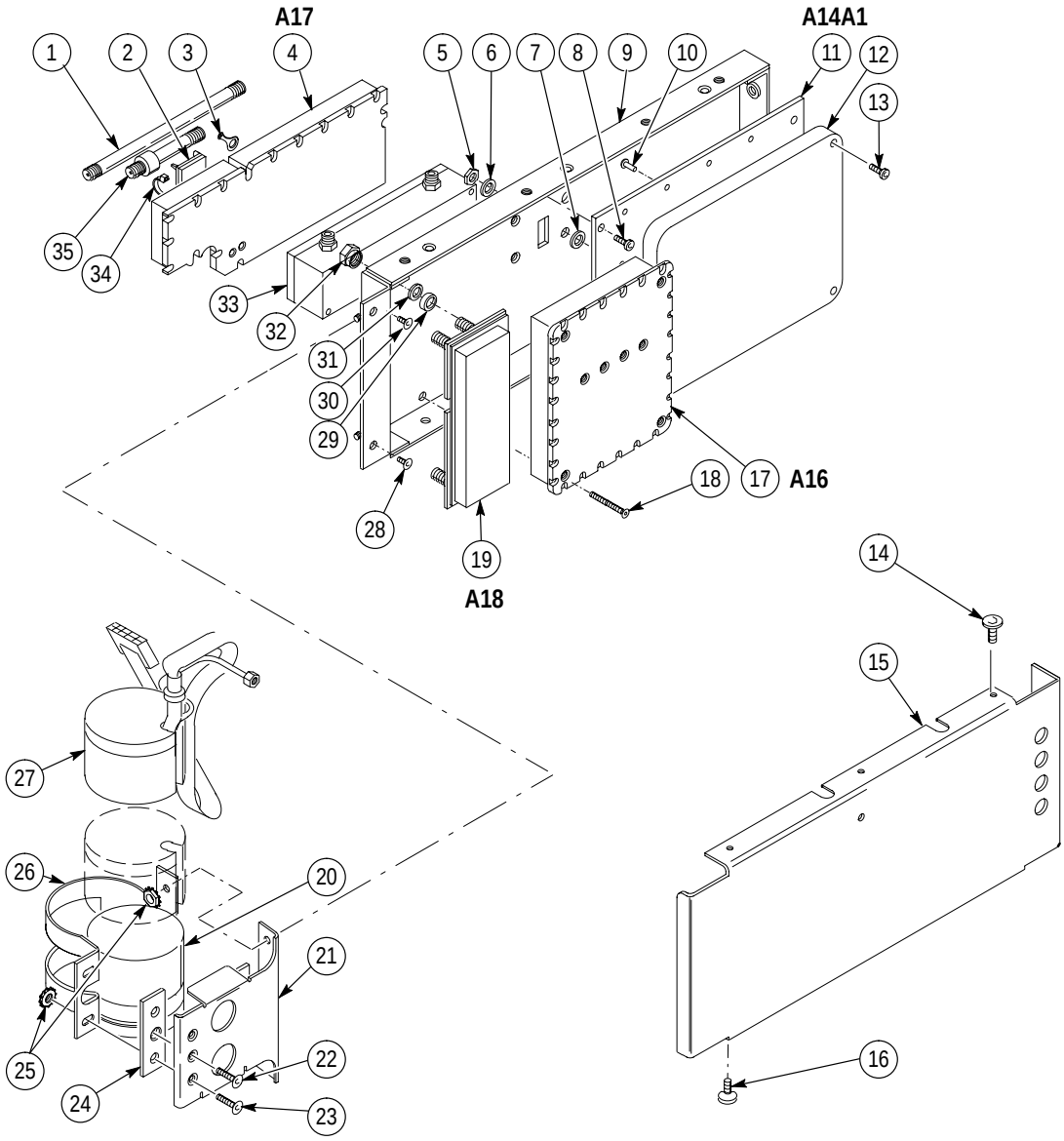

Figure 4: Chassis #1

Replaceable Mechanical Parts List

Fig. & Index Number	Tektronix Part Number	Serial No. Effective	Serial No. Discont'd	Qty	Name & Description	Mfr. Code	Mfr. Part Number
5–1	211–0711–00			4	SCR, ASSEM WSHR: 6–32 X 0.250, PNH, STL, CDPL, T–15 TORX DR, MACHINE	0KB01	ORDER BY DESC
–2	211–0541–00			4	SCREW, MACHINE: 6–32 X 0.25, FLH, 100 DEG, STL	TK0435	ORDER BY DESC
–3	200–3158–02			1	COVER, VR: ALUMINUM	0J260	200–3158–02
–4	211–0661–00			3	SCR, ASSEM WSHR: 4–40 X 0.25, PNH, STL, CD PL, POZ, MACHINE	TK0435	ORDER BY DESC
–5	––––––––				CKT BOARD ASSY: VR FILTER (SEE A13 REPL)		
–6	441–1711–01			1	CHASSIS, VR: ALUMINUM	0J260	441–1711–01
–7	441–1952–00			1	CHASSIS, SCOPE: TRACKING GENERATOR, AL	5Y400	441–1952–00
			B031399		2711		
			B034199		2712		
–8	407–4480–00			1	CRT MOUNT:CRT MOUNT,0.048 1018 CRS,EG,W/2 6–32 PEM NUTS,271X,	80009	407–4480–00
		B041400			2711		
		B044200			2712		
	441–2122–00			1	CHASSIS,SCOPE:TRACKING GENERATOR CHASSIS,0.050 ALUM,W/10 STANDOFFS,271X,	80009	441–2122–00
		B041400			2711		
		B044200			2712		
–9	426–1766–00			1	MOUNT, RESILIENT: CRT, REAR	80009	426176600
–10	214–1061–05			1	SPRING, GROUND: PLATED	TK1326	ORDER BY DESC
–11	211–0541–00			2	SCREW, MACHINE: 6–32 X 0.25, FLH, 100 DEG, STL	TK0435	ORDER BY DESC
–12	343–1224–00			1	RETAINER, CKT BD: ALUMINUM	0J9P4	343–1224–00
			B031399		2711		
			B034199		2712		
	343–1599–00			1	RETAINER:PCB RETAINER,0.063 ALUM,271X	80009	343–1599–00
		B041400			2711		
		B044200			2712		
–13	––––––––				CKT BOARD ASSY: CFC (SEE A12A1 REPL)		
–14	211–0661–00			2	SCR, ASSEM WSHR: 4–40 X 0.25, PNH, STL, CD PL, POZ, MACHINE	TK0435	ORDER BY DESC
–15	337–3547–00			1	SHIELD, ELEC: 300HZ FILTER, BACK	TK1947	337–3547–00
–16	407–3735–00			1	BRACKET, FILTER: ALUMINUM	0J9P4	407–3735–00
–17	337–3546–00			1	SHIELD, ELEC: 300HZ FILTER, FRONT	TK1947	337–3546–00
–18	––––––––				CKT BOARD ASSY: 300HZ (SEE A22 REPL)		
–19	361–1487–00			1	SPACER: ALUMINUM	TK2174	361–1487–00
–20	210–0202–00			1	TERMINAL, LUG: 0.146 ID, LOCKING, BRZ TIN PL	TK1181	ORDER BY DESC
–21	211–0162–00			12	SCREW, MACHINE: 2–56 X 0.188, SCH, SST	TK0428	ORDER BY DESC
–22	––––––––				CKT BOARD ASSY: LOW FREQ VCO (SEE A12A3 REPL)		
–23	337–3493–00			1	SHIELD, XFMR: SILVER PLATED	0J9P9	337–3493–00
–24	200–3606–00			1	COVER, HOUSING: ALUMINUM, 5052–H32	0J260	200–3606–00
–25	337–3494–00			1	SHIELD, COVER	80009	337–3494–00
–26	129–1254–00			1	SPACER, POST: 6–32, 0.312 HEX, ALUMINUM	TK2174	129–1254–00
–27	211–0162–00			11	SCREW, MACHINE: 2–56 X 0.188, SCH, SST	TK0428	ORDER BY DESC

Replaceable Mechanical Parts List (Cont.)

Fig. & Index Number	Tektronix Part Number	Serial No. Effective	Serial No. Discont'd	Qty	Name & Description	Mfr. Code	Mfr. Part Number
–28	211–0016–00			1	SCREW, MACHINE: 4–40 X 0.625, PNH, STL	TK0435	ORDER BY DESC
–29	210–1178–00			1	WASHER, SHLDR: U/W TO–220 TRANSISTOR	13103	7721–7PPS
–30	342–0563–00			1	INSULATOR, PLATE: TRANSISTOR, FIBERGLASS REINFORCED SILICON RUBBER	18565	69–11–8805–1674
–31	337–3509–00			1	SHIELD, ELEC: COIL, BRASS	TK1947	337–3509–00
–32	– – – – – – –				CKT BOARD ASSY: HIGH FREQ VCO (SEE A12A2 REPL)		
–33	211–0162–00			9	SCREW, MACHINE: 2–56 X 0.188, SCH, SST	TK0428	ORDER BY DESC
–34	380–0901–01			1	HOUSING, LOCK: ALUMINUM	TK1564	380–0901–01
–35	210–0586–00			4	NUT, PL, ASSEM WA: 4–40 X 0.25, STL CD PL	TK0435	ORDER BY DESC
–36	211–0343–00			10	SCREW, MACHINE: 4–40 X 0.250, TRUSS, STL, CDPL, T–9 TORX DR	0KB01	ORDER BY DESC
–37	129–1200–00			4	SPCR, SHLDR SCR: 5.75 L, W 4–40 INT ONE END, 4–40 EXT INE END, 0.188 HEXAL	TK1287	129–1200–00
–38	337–3500–01			1	SHIELD, ELEC: BACK BRASS	TK1947	337–3500–01
–39	210–0004–00			4	WASHER, LOCK: #4 INTL, 0.015 THK, STL	78189	1204–00–00–0541
–40	211–0343–00			4	SCREW, MACHINE: 4–40 X 0.250, TRUSS, STL, CDPL, T–9 TORX DR	0KB01	ORDER BY DESC
–41	– – – – – – –				CKT BOARD ASSY: MICROPROCESSOR (SEE A10 REPL)		
–42	– – – – – – –				CKT BOARD ASSY: DISPLAY STORAGE (SEE A9 REPL)		
–43	174–0534–00			1	CA ASSY, SP, ELEC: 50, 28 AWG, 5.0 L RIBBON	TK2469	174–0534–00
–44					CKT BOARD ASSY: DIGITAL (SEE A11 OR A25 REPL)		
–45	337–3433–00			1	SHIELD, ELEC: CIRCUIT BOARD	TK1947	337–3433–00
–46	– – – – – – –				CKT BOARD ASSY: LOG AMP (SEE A7 REPL)		
–47	214–4421–00	B010100	B010552	1	HT SK, CKT BD: ALUMINUM, LOG CIRCUIT BD	5Y400	ORDER BY DESC
	214–4421–01	B010553		1	HT SK, CKT BD: ALUMINUM, W/SHIM (2712 ONLY)	5Y400	ORDER BY DESC
	214–4421–01			1	HT SK, CKT BD: ALUMINUM, W/SHIM (2711 ONLY)	5Y400	ORDER BY DESC
–48	342–0563–00			2	INSULATOR, PLATE: TRANSISTOR, FIBERGLASS REINFORCED SILICON RUBBER	18565	69–11–8805–1674
–49	– – – – – – –				(SEE A7U990 AND A7U991 REPL)		
–50	210–0994–00			2	WASHER, FLAT: 0.125 ID X 0.25 OD X 0.022, STL	12327	ORDER BY DESC
–51	210–0054–00	B010100	B010553	2	WASHER, LOCK: #4 SPLIT, 0.025 THK STL (2712 ONLY)	86928	ORDER BY DESC
–52	210–0406–00			2	NUT, PLAIN, HEX: 4–40 X 0.188, BRS CD PL	73743	12161–50
–53	210–1178–00			2	WASHER, SHLDR: U/W TO–220 TRANSISTOR	13103	7721–7PPS
–54	337–3434–00			1	SHIELD, ELEC: CIRCUIT BOARD	TK1947	337–3434–00
–55	211–0409–00			1	SCR, ASSEM WSHR: 4–40 X 0.312, PNH, STL, CDPL, T–10 TORX DR	0KB01	211–0409–00
–56	255–0581–00			AR	PLASTIC CHANNEL:0.156 X 0.156,POLYETHYLENE	TK1643	ORDER BY DESC
–57	211–0711–00			3	SCR, ASSEM WSHR: 6–32 X 0.250, PNH, STL, CDPL, T–15 TORX DR, MACHINE	0KB01	ORDER BY DESC
–58	214–4138–00			1	HT SK, CKT BD: ALUMINUM	0J260	214–4138–00

Replaceable Mechanical Parts List (Cont.)

Fig. & Index Number	Tektronix Part Number	Serial No. Effective	Serial No. Discont'd	Qty	Name & Description	Mfr. Code	Mfr. Part Number
–59	211–0116–00			4	SCR, ASSEM WSHR: 4–40 X 0.312, PNH, BRS, NP, POZ	TK0435	ORDER BY DESC
–60	210–1178–00			4	WASHER, SHLDR: U/W TO–220 TRANSISTOR	13103	7721–7PPS
–61	342–0563–00			4	INSULATOR, PLATE: TRANSISTOR, FIBERGLASS REINFORCED SILICON RUBBER	18565	69–11–8805–1674
–62	211–0541–00			8	SCREW,MACHINE:6–32 X 0.25,FLH,100 DEG,STL	TK0435	ORDER BY DESC

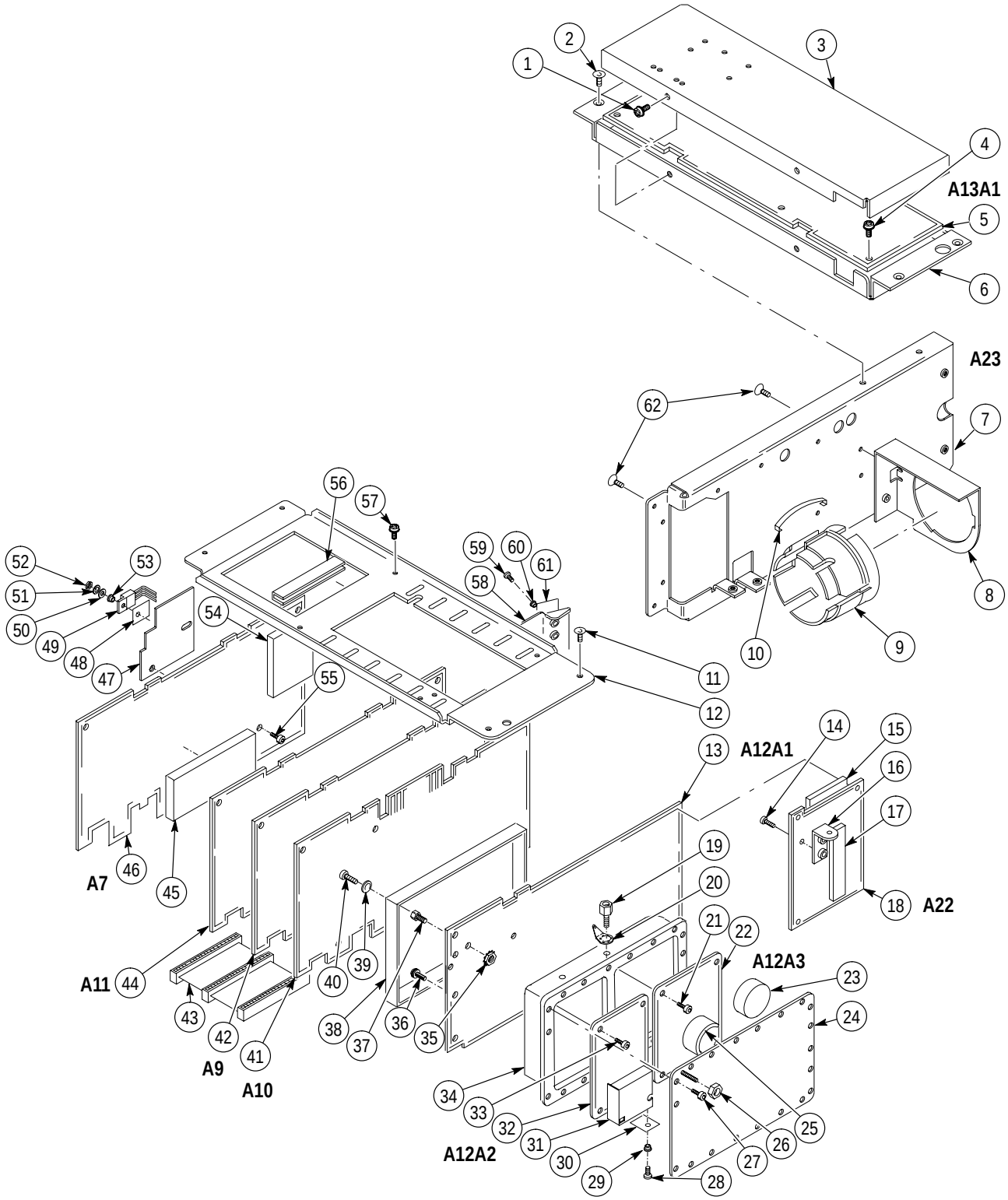

Figure 5: Chassis #2

Replaceable Mechanical Parts List

Fig. & Index Number	Tektronix Part Number	Serial No. Effective	Serial No. Discont'd	Qty	Name & Description	Mfr. Code	Mfr. Part Number
6–0					TRACK GEN ASSY (SEE A24 REPL)		
–1					ABSORBER, RF: LOADED, SILICON RUBBER (COMES ATTACHED TO FIG. & INDEX 6–2)		
–2	119–4285–00			1	COVER ASSEMBLY: TOP WITH RF ABSORBER	80009	119428500
	119–4285–01		B031399 B034199	1	COVER ASSEMBLY: TOP WITH RF ABSORBER 2711 2712	80009	119428501
	119–4285–02	B041400 B044200		1	COVER ASSEMBLY:TOP W/RF ABSORBER,2711 2711 2712	80009	119–4285–02
–3	211–0734–00			12	SCREW, MACHINE: 6–32 X 0.25O, FLH100, STL, CDPL, T–10 TORX DR	0KB01	211–0734–00
–4	211–0265–00			12	SCREW, CAP: 2–56 X 0.375, SCH, SST, PASS, HEX	TK0392	ORDER BY DESC
–5	210–0053–00			12	WASHER, LOCK: #2 SPLIT, 0.02 THK STL	TK0392	ORDER BY DESC
–6	211–0408–00			10	SCR, ASSEM WSHR: 4–40 X 0.250, PNH, STL, ZINC, T–10 TORX DR, SEMS	0KB01	211–0408–00
–7					CKT BOARD ASSY: TG PHASE LOCK LOOP (SEE A24A2 REPL)		
–8	342–0917–00			0	INSULATOR, SHEET: VALOX FR, TRACKING GEN	2K262	342–0917–00
–9	380–0962–00			1	HOUSING, TRKG GE: ALUMINUM	57997	380–0962–00
–10	210–0008–00			1	WASHER, LOCK: #8 INTL, 0.02 THK, STL	0KB01	ORDER BY DESC
–11					100PF, FEED THROUGH CAP (SEE A24C500)		
–12					CKT BOARD ASSY; TG INTERFACE (SEE A24A1 REPL)		
–13					CKT BOARD ASSY: TG ISOLATION AMP (SEE A23A3 REPL)		
–14	211–0408–00			5	SCR, ASSEM WSHR: 4–40 X 0.250, PNH, STL, ZINC, T–10 TORX DR, SEMS	0KB01	211–0408–00
–15	361–1558–00			2	SPACER, SLEEVE: 0.252 ID X 0.375 OD X 0.180 L, BRASS	TK1465	361–1558–00
–16	348–1197–00			0	GSKT, SHLD ELEC: EMI, .062 DIA, SPIRALED, CE–BU W/TIN, MODERATE FORCE, W/O ELASTOMER INSERT	60050	MS–04 NC
–17	210–0046–00			2	WASHER, LOCK: 0.261 ID, INTL, 0.018 THK, STL	78189	1214–05–00–0541
–18	220–0787–00			2	NUT, PLAIN, HEX: 0.25–36 X 0.312 HEX, SST	0KB01	220–0787–00
–19	211–0734–00			10	SCREW, MACHINE: 6–32 X 0.25O, FLH100, STL, CDPL, T–10 TORX DR	0KB01	211–0734–00
–20	119–4284–00 119–4284–01	B010100 B010345	B010344	1 1	COVER ASSEMBLY: REAR WITH RF ABSORBER COVER ASSEMBLY: REAR WITH RF ABSORBER (2711 ONLY)	80009 80009	119428400 119428401
	119–4284–00 119–4284–01	B010100 B011382	B011381	1 1	COVER ASSEMBLY: REAR WITH RF ABSORBER COVER ASSEMBLY: REAR WITH RF ABSORBER (2712 ONLY)	80009 80009	119428400 119428401
–21					ABSORBER, RF: LOADED, SILICON RUBBER (COMES ATTACHED TO FIG. & INDEX 5–20)		
–22	361–1557–00			1	SPACER, MIXER: ALUMINUM	57997	361–1557–00

Replaceable Mechanical Parts List (Cont.)

Fig. & Index Number	Tektronix Part Number	Serial No. Effective	Serial No. Discont'd	Qty	Name & Description	Mfr. Code	Mfr. Part Number
–23					CAP, FXD, CER DI: 0.005UF, +100–0%, 100V (SEE A24C110, C120, C121, C130, C132, C134, C136, C137, C138, C202, C214, C220, C233, C236 C237, C301, C310, C322 REPL)		
–24	211–0408–00			8	SCR, ASSEM WSHR: 4–40 X 0.250, PNH, STL, ZINC, T–10 TORX DR, SEMS	0KB01	211–0408–00
–25	210–1178–00	B010100	B020476	4	WASHER, SHLDR: U/W TO–220 TRANSISTOR	13103	7721–7PPS
	210–1291–01	B020477		1	WASHER, SHLDR: 0.118 ID X 0.202 OD X 0.1 THK (2711 ONLY)	TK2562	210–1291–01
	210–1178–00	B010100	B021667	4	WASHER, SHLDR: U/W TO–220 TRANSISTOR	13103	7721–7PPS
	210–1291–01	B021668		4	WASHER, SHLDR: 0.118 ID X 0.202 OD X 0.1 THK (2712 ONLY)	TK2562	210–1291–01
–26	342–0563–00			4	INSULATOR, PLATE: TRANSISTOR, FIBERGLASS REINFORCED SILICON RUBBER	18565	69–11–8805–1674
–27	220–0787–00			1	NUT, PLAIN, HEX: 0.25–36 X 0.312 HEX, SST	0KB01	220–0787–00
–28	210–0046–00			1	WASHER, LOCK: 0.261 ID, INTL, 0.018 THK, STL	78189	1214–05–00–0541
–29					CKT BOARD: LOW PASS FILTER (SEE A24FL1 REPL)		
–30	210–0053–00			2	WASHER, LOCK: #2 SPLIT, 0.02 THK STL	TK0392	ORDER BY DESC
–31	211–0162–00			2	SCREW, MACHINE: 2–56 X 0.188, SCH, SST	TK0428	ORDER BY DESC
–32					CKT BOARD ASSY: TG RF AMPLIFIER (SEE A24A4 REPL)		
–33	210–1002–00			6	WASHER, FLAT: 0.125 ID X 0.25 OD X 0.022, BRS	12327	ORDER BY DESC
–34	211–0408–00			6	SCR, ASSEM WSHR: 4–40 X 0.250, PNH, STL, ZINC, T–10 TORX DR, SEMS	0KB01	211–0408–00

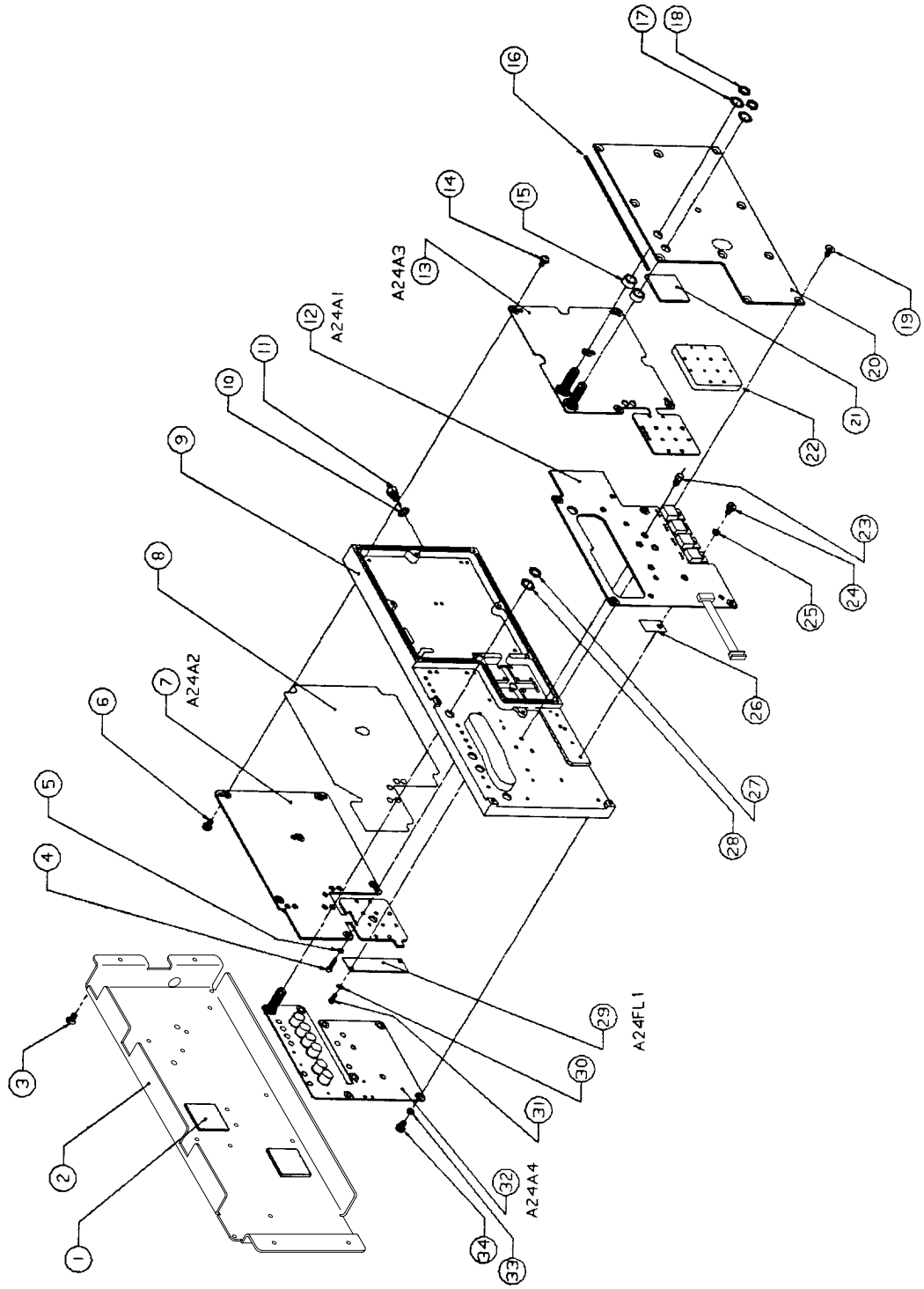

Figure 6: Tracking generator (Option 04)

Replaceable Mechanical Parts List

Fig. & Index Number	Tektronix Part Number	Serial No. Effective	Serial No. Discont'd	Qty	Name & Description	Mfr. Code	Mfr. Part Number
7–1					TRACK GEN ASSY (SEE A24 REPL)		
–2	211–0541–00			2	SCREW, MACHINE: 6–32 X 0.25, FLH, 100 DEG, STL	TK0435	ORDER BY DESC
–3	441–1952–00			1	CHASSIS, SCOPE: TRACKING GENERATOR, AL	5Y400	441–1952–00
–4					CA ASSY, SP, ELEC (SEE W54 REPL)		
–5					CA ASSY, RF (SEE W51 REPL) (OPTION 15 ONLY)		
–6					CA ASSY, RF (SEE W53 REPL)		
–7					CA ASSY, RF (SEE W52 REPL)		
–8					CA ASSY, RF (SEE W54 REPL)		
–9	211–0711–00			4	SCR, ASSEM WSHR: 6–32 X 0.250, PNH, STL, CDPL, T–15 TORX DR, MACHINE	0KB01	ORDER BY DESC

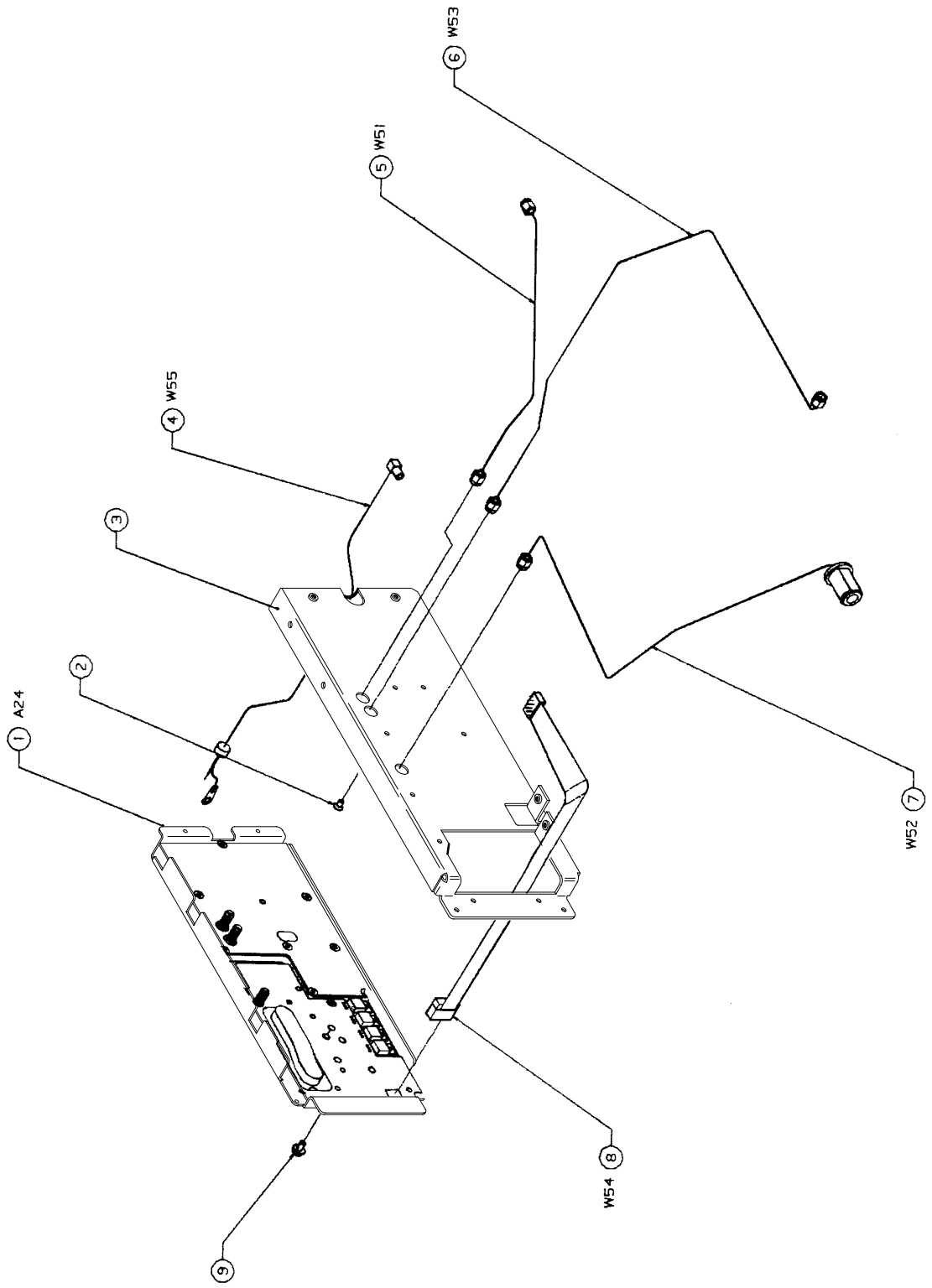

Figure 7: Tracking generator (Option 04)

Replaceable Mechanical Parts List

Fig. & Index Number	Tektronix Part Number	Serial No. Effective	Serial No. Discont'd	Qty	Name & Description	Mfr. Code	Mfr. Part Number
8–1	337–3575–01			1	SHIELD, ELEC: RF OPTIONS	TK1947	337–3575–01
–2	211–0005–00			6	SCREW, MACHINE: 4–40 X 0.125, PNH, STL	0KB01	ORDER BY DESC
–3					CKT BOARD ASSY: RF OPTION (SEE A26 REPL) (OPTION 12 ONLY) CKT BOARD ASSY: RF OPTION (SEE A23 REPL) (OPTION 14 ONLY)		
–4	211–0661–00			2	SCR, ASSEM WSHR: 4–40 X 0.25, PNH, STL, CD PL, POZ, MACHINE	TK0435	ORDER BY DESC
–5	129–1321–00			6	SPACER, POST: 4–40 X 0.47 L, HEX, ALUMINUM	TK2174	129–1321–00
–6	441–1911–00			1	CHASSIS, RF: ALUMINUM	0J260	441–1911–00
			B031399		2711		
			B034199		2712		
	441–2123–00			1	CHASSIS,RF:SIDE CHASSIS,0.050 ALUM,W/8 STANDOFFS,3 PRESSMOUNT HOLES,271X	80009	441–2123–00
		B041400			2711		
		B044200			2712		

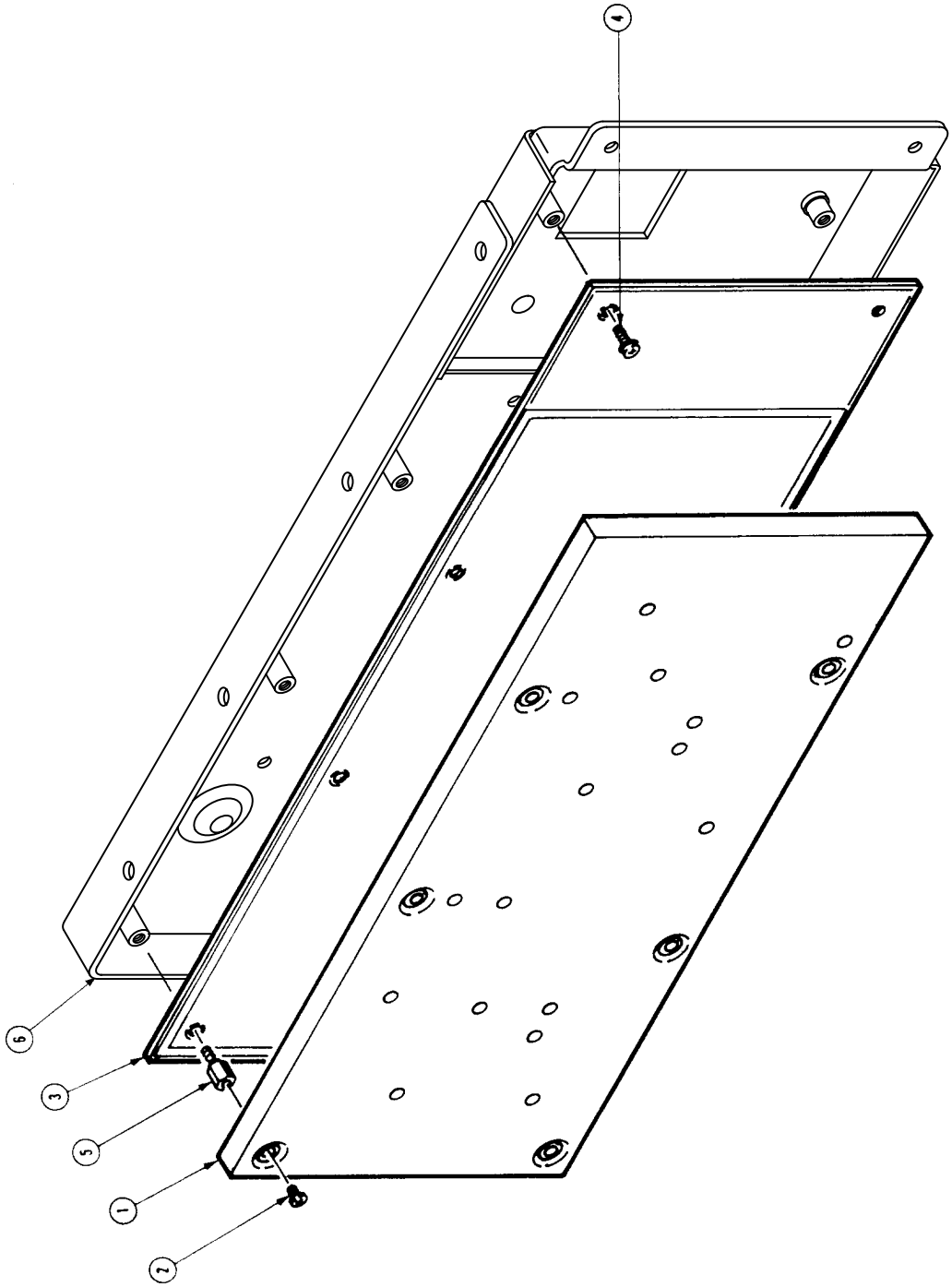

Figure 8: Option 12 and Option 14

Replaceable Mechanical Parts List

Fig. & Index Number	Tektronix Part Number	Serial No. Effective	Serial No. Discont'd	Qty	Name & Description	Mfr. Code	Mfr. Part Number
9–1	161–0104–00			1	CABLE ASSY,PWR.,:3,18 AWG,98 L,SVT,GREY/BLK, 60 DEG C,BME X RTANG ICE,RECEPT,10A/250V;,,,	16428	CH8352, FH–8352
–2	161–0104–06			1	CABLE ASSY,PWR,:3 X 0.75MM SQ,220V,98.0 L (EUROPEAN OPTION A1 ONLY)	S3109	
–3	161–0104–07			1	CABLE ASSY,PWR,: (UNITED KINGDOM OPTION A2 ONLY)	80009	161–0104–07
–4	161–0104–05			1	CABLE ASSY,PWR,:3,18 AWG,240V,98.0 L (AUSTRALIAN OPTION A3 ONLY)	S3109	
–5	161–0134–00			1	CABLE ASSY,PWR,:3,18 AWG,240V,120.0 L (NORTH AMERICAN OPTION A4 ONLY)	70903	ORDER BY DESCR
–6	161–0167–00			1	CABLE ASSY,PWR,:3.0 X 0.75,6A,240V,2.5M L (SWISS OPTION A5 ONLY)	80009	161–0167–00
–7	200–2520–00			1	COVER,SCOPE:FRONT,ABS	TK2165	ORDER BY DESCR
–8	103–0045–00			1	ADAPTER,CONN:N MALE TO BNC FEMALE	24931	29 JP104–3
	070–8132–XX			1	MANUAL,TECH:PROGRAMMERS,2711,2712	80009	070–8132–XX
	070–8500–XX			1	MANUAL,TECH:USER,2711	80009	070–8500–XX
	070–8501–XX			1	MANUAL,TECH:POCKET REFERENCE,2711	80009	070–8501–XX
					OPTIONAL ACCESSORIES		
	——— ———			1	CAMERA,SCOPE:C9		
	——— ———			1	K212,CART PORTABLE INSTRUMENT		
	012–0057–01			1	CABLE ASSY,RF:50 OHM COAX,43.0 L	80009	012–0057–01
	012–0074–00			1	CABLE ASSY,RF:75 OHM COAX,42.0 L	80009	012–0074–00
	012–0076–00			1	CABLE ASSY,RF:50 OHM COAX,20.0 L	80009	012–0076–00
	016–0359–02			1	HOOD,CRT:PORTABLE SERIES	80009	016–0359–02
	016–0566–00			1	VISOR,CRT	TK2165	ORDER BY DESC
	016–0677–02			1	POUCH,ACCESSORY:W/PLATE	TK0174	016–0677–02
	016–0792–02			1	CASE,CARRYING:27 X 20.5 X 12.5,PLASTIC,SILVER	80009	016–0792–02
	016–0848–00			1	COVER,PROT:WATERPROOF VINYL	80009	016–0848–00
	016–1158–00			1	CASE,CARRYING:SOFT PADDED,OPTIONS	80009	016–1158–00
	070–8130–XX			1	MANUAL,TECH:SERVICE,2711/2712	80009	070–8130–XX
	131–4199–00			1	CONN,RCPT,ELEC:75 TO 50 OHM,N STYLE	52750	50Z75–1050
	337–2775–01			1	SHLD,IMPLOSION:	80008	337–2775–01
	337–2775–02			1	SHLD,IMPLOSION:	80008	337–2775–02
	346–0199–00			1	STRAP,CARRYING:MKD TEKTRONIX	80008	346–0199–00
	606–0110–02			1	TEST KIT:SERVICE CABLES & EXTENDER BOARD	80008	606–0110–02

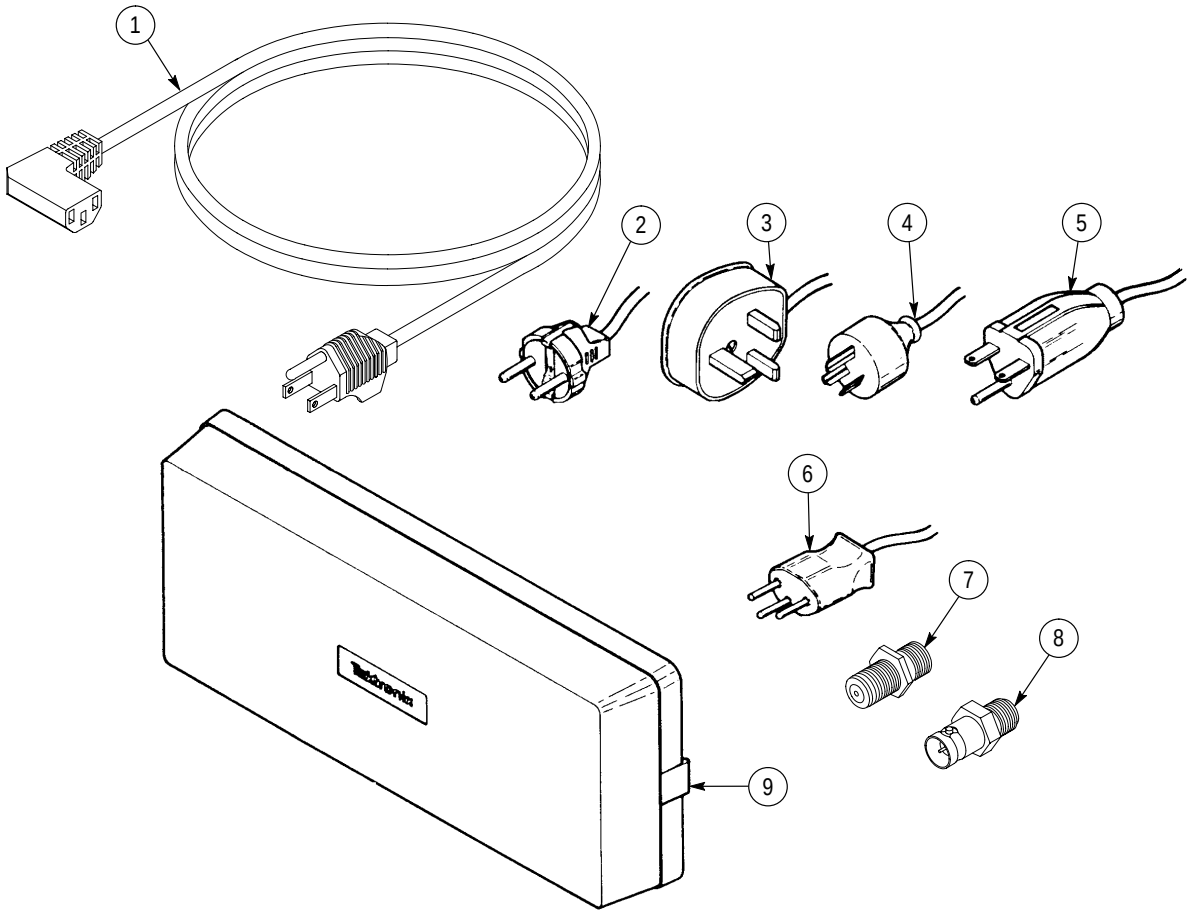

Figure 9: Accessories

Tektronix®

REVISION INFORMATION

Manual Part No. 070-8130-01 **First Printing** JAN 1991

Product: 2711 & 2712 Service Manual **Revised** OCT 1992

Manual Insert Status

DATE	CHANGE REFERENCE	STATUS
MAR 1991	C1/391 REV. 1	Effective
JAN 1992	M76877	Effective
MAR 1992	QPIP/132	Effective
APR 1992	M76666	Effective
APR 1992	M76793	Effective
DEC 1992	M78606	Effective
JAN 1993	M69372	Effective
JAN 1993	M78892	Effective
MAR 1993	M79006	Effective
MAY 1993	M79751	Effective
JAN 1994	M80348	Effective

MANUAL CHANGE INFORMATION

Tektronix® COMMITTED TO EXCELLENCE

Date: 03-14-91 **Change Reference:** C1/391 Rev. 1

Product: 2711 & 2712 Service **Manual Part No.:** 070–8130–01

DESCRIPTION

The following changes were made to the previous Power Supply board to bring it to a comparative level with the Power Supply currently installed in 2712 instruments with serial numbers above B010119. These changes apply only to 2712 instruments with serial numbers from B010100 to B010119.

The Power Supply board with these changes may only be replaced with the current board. Refer to the parts location chart and component location illustration for the Power Supply board to locate landmarks.

1. Near the collector of Q130 the following occurred:

- R635, R636, and R637 (221 Ω surface-mounted resistors) were replaced with two 330 Ω (R1 and R2) axial-lead resistors.
- A strapping wire was added.
- A circuit board run was cut.

See Figure 1 for change detail. Refer to the parts list following Figure 1 for part numbers.

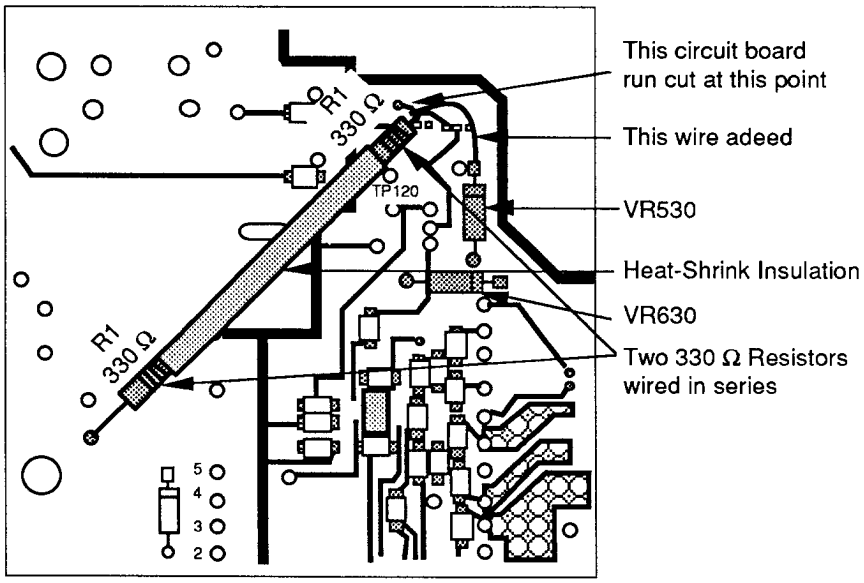

Figure 1. Partial Power Supply board.

2. At the base of Q611 the following occurred:

- R610, R613, and R618 (221 Ω surface-mounted resistors) were replaced with two 330 Ω (R3 and R4), axial-lead resistors.
- CR611 is replaced with an axial lead diode (CR1).

3. An axial lead diode (CR2) was added to the base of Q700 (cathode connected to the base and anode connected to the emitter.

See Figure 2 for wiring detail, and refer to the parts list for part numbers:

4. R610 at the collector of Q611 is a 0 Ω resistor. In the current Power Supply board this resistor is replaced by a circuit board run. Therefore, it is not shown on the schematic. Also, C205 has been moved to the back of the Power Supply board.

5. In the old Power Supply board, C105 had been connected between the junction of CR602 and the emitter of Q611 and CR620. To accomplish the configuration shown in diagram S14b with the junction of CR602 and the emitter of Q611 connected to C105 via a 56.2 Ω resistor, the following was done:

a. One lead of C105 is unsoldered from the board and lifted up.

b. One lead of a 56 Ω/0.25 W resistor is soldered into the hole from which the C105 lead was lifted.

c. The other resistor lead is soldered to the free lead of C105.

d. The anode of a diode is soldered to the junction of C105 and the 56 Ω resistor. The diode's cathode is soldered to ground.

e. The cathode of another diode is also soldered to the junction of C105 and the 56 Ω resistor, and the diode's anode is soldered to +50 V.

See Figure 3 for wiring detail, and refer to the parts list for part numbers.

PARTS LIST

Component No.	Tektronix Part No.	Name & Description
CR1	152-0808-00	SEMICOND DVC,DI:RECT,SI,400V,1A
CR2	152-0141-00	SEMICOND DVC,DI:SW,SI,30V,150MA
CR3	152-0808-00	SEMICOND DVC,DI:RECT,SI,400V,1A
CR4	152-0808-00	SEMICOND DVC,DI:RECT,SI,400V,1A
R1	315-0331-00	RES,FXD,FILM:330 OHM,5%,0.25W
R2	315-0331-00	RES,FXD,FILM:330 OHM,5%,0.25W
R3	315-0331-00	RES,FXD,FILM:330 OHM,5%,0.25W
R4	315-0331-00	RES,FXD,FILM:330 OHM,5%,0.25W
R5	315-0560-00	RES,FXD,FILM:56 OHM,5%,0.25W

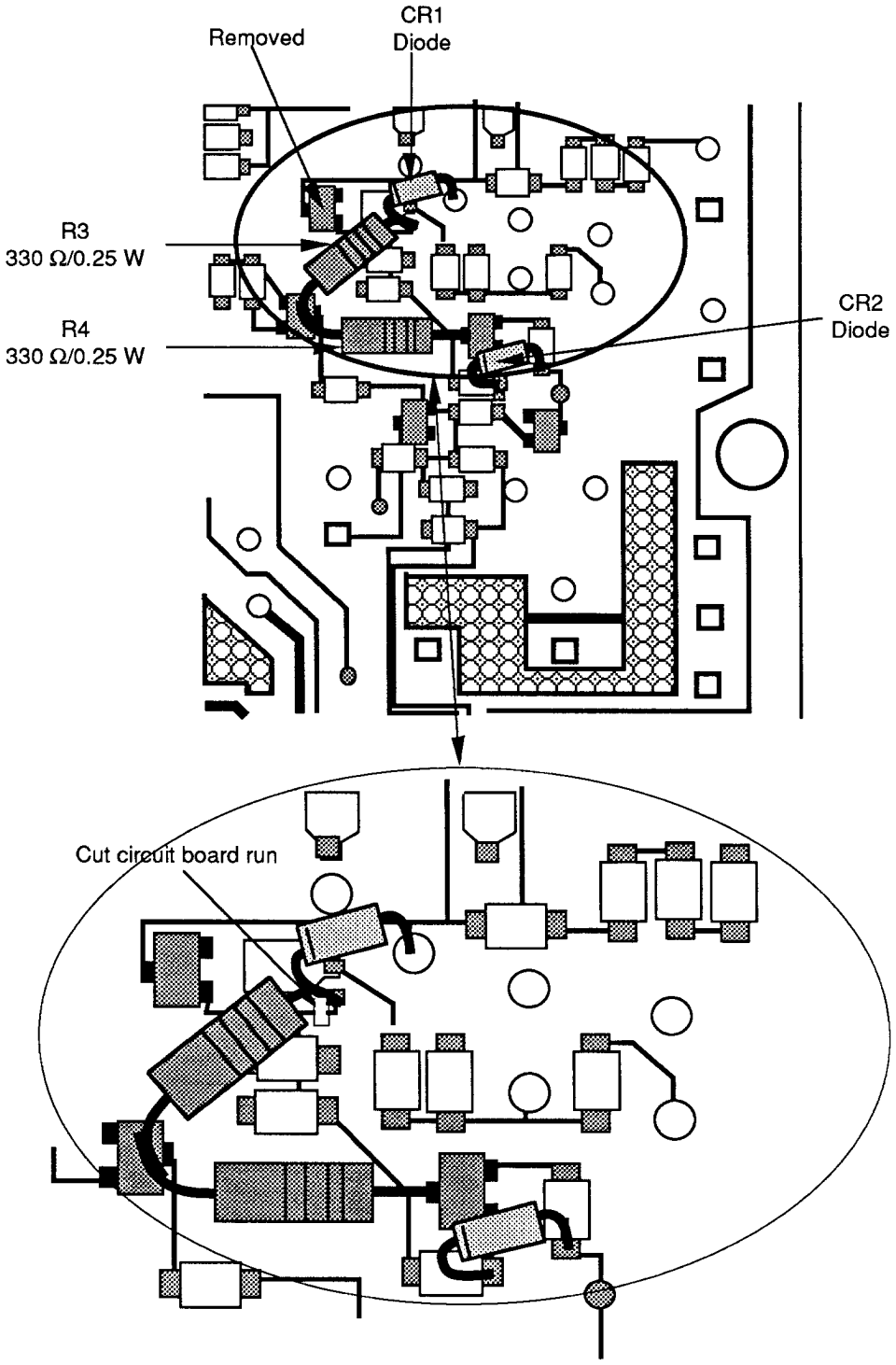

Figure 2. More partial Power Supply board.

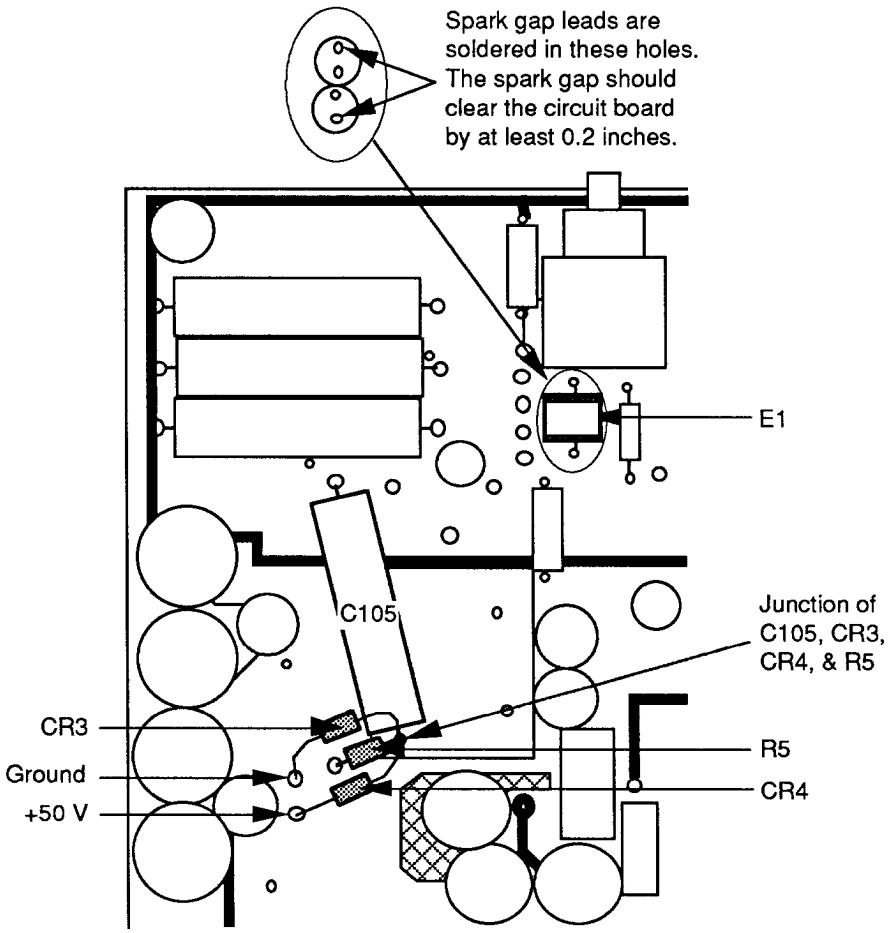

Figure 3. More partial Power Supply board showing wiring of CR3, CR4, R5, C105, and E1.

END POWER SUPPLY BOARD CHANGES

The following correction applies to all instruments. The parts shown in Figure 4 were inadvertently omitted from the exploded view of Figure 2 in Section 10 of this manual.

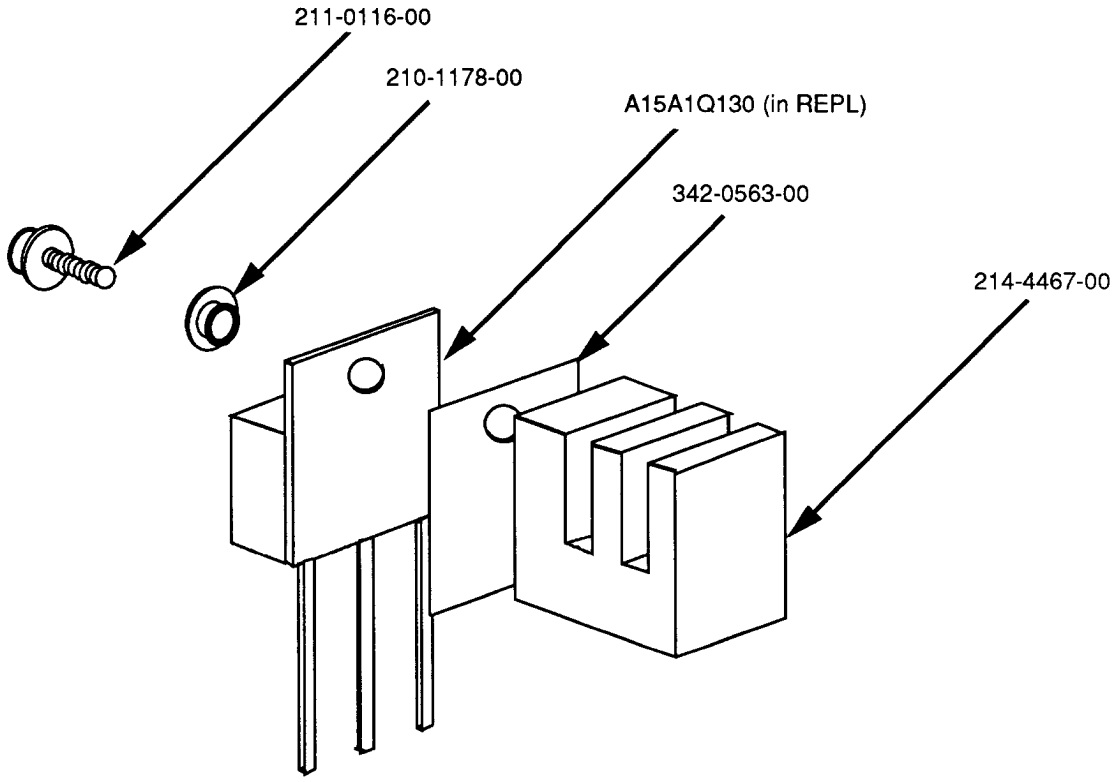

Figure 4. Heat sink left out of the exploded view.

END EXPLODED VIEW CORRECTIONS

The following component (two) changes were made to the VR board to ensure that the output impedance of the VR board is approximately 50 Ω, resulting in a noticeable reduction of baseline noise (improves the 80 dB step logging). Change the values of R100 and R101 on the VR board and S6a as follows:

Component No.	Tektronix Part No.	Name & Description
R100	321-5046-00	RES,FXD,FILM:82.5 OHM,1%,0.125W
R101	321-5006-00	RES,FXD,FILM:100 OHM,1%,0.125W

END VR BOARD CHANGES

The following component changes were made to the Log board to improve accuracy of the detected value for low repetition rate signals in Band A and Bands C & D, and accuracy in measurements near the bottom of the screen in QP-LOG MODE at high temperatures.Add a leaded diode (CR300) as shown in Figure 5, and change the values of R120 and R121 as follows:

Component No.	Part No.	Name & Descripetion
CR300	152-0324-00	SEMICOND DVC,DI:SW,SI,35V,0.1A,DO-7
R120	321-5025-00	RES,FXD,FILM:3.92K,1%,0.125W
R121	321-5030-00	RES,FXD,FILM:10.0K,1%,0.125W

NOTE

CR300, a surface-mount diode, is replaced by aleaded diode. Refer to Figure 1 for the location and wiring of CR300. Also, refer to the parts location chart and board illustration in the diagrams section for the location of R120 and R121.

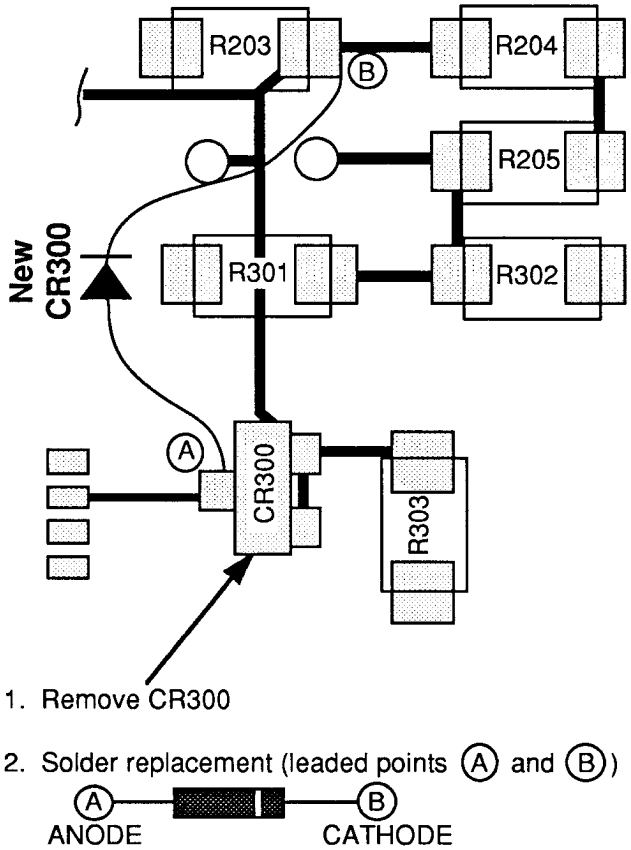

Figure 1. Partial Log board.

END LOG BOARD CHANGES

Tektronix®
COMMITTED TO EXCELLENCE

MANUAL CHANGE INFORMATION

Date: 1-28-92 **Change Reference:** M76877

Product: See List **Manual Part No:** See List

DESCRIPTION Product Group 2E

INSTRUMENT	MANUAL NUMBER	BEGINNING SERIAL NO.
2710	070-6024-01	B044724
2711	070-8130-01	B010121
2712	070-8130-01	B010757

ELECTRICAL PARTS LIST CHANGE

CHANGE TO:

CIRCUIT NO.	PART NO.	DESCRIPTION
A18	672-1297-01	RF ATTENUATOR
A18A2C111	283-5016-00	CAP,FXD,CER DI:1 UF,10%,50V

ADD:

CIRCUIT NO.	PART NO.	DESCRIPTION
A18A2C112	283-5016-00	CAP,FXD,CER DI:1 UF,10%,50V

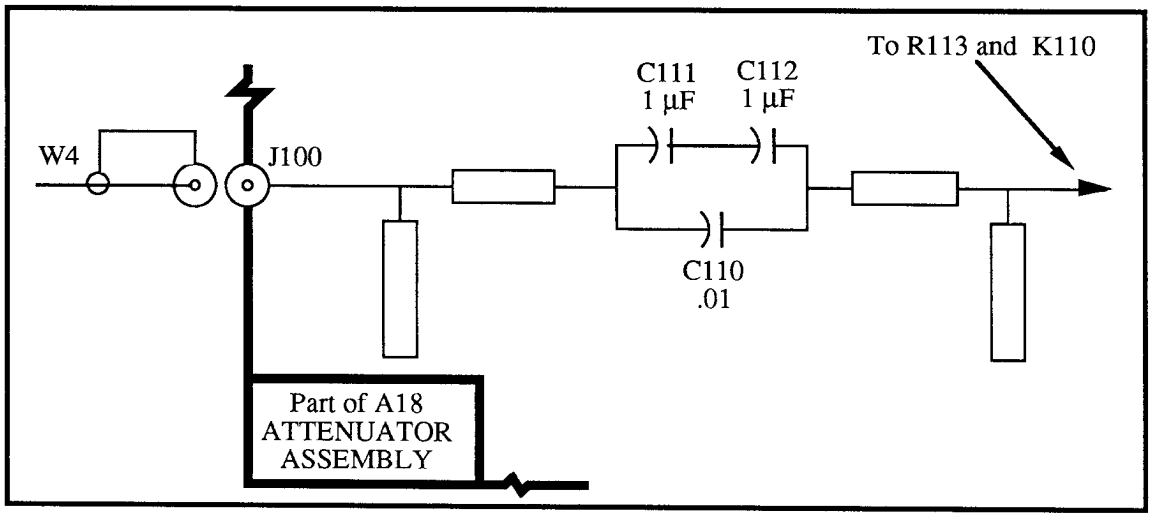

PARTIAL SCHEMATIC SHOWING C112 ADDED

Tektronix®
COMMITTED TO EXCELLENCE

MANUAL CHANGE INFORMATION

Date: 3-31-92 **Change Reference:** QPIP/132

Product: 2711/2712 SPECTRUM ANALYZER **Manual Part No.:** 070–8130–01

DESCRIPTION

Replace Performance Check step 28i, in Section 3, with the following for all instruments.

i. Check System Dynamic Range
(≥100 dB)

(1) Recall default power-up settings by pressing UTIL 1 1.

(2) Select the following settings on the Spectrum Analyzer:

FREQUENCY	100 MHz
SPAN/DIV	ZERO SPAN
RESOLUTION BW	3 kHz
REFERENCE LEVEL	+4 dBm
VERTICAL SCALE	1 dB/
SWEEP RATE	AUTO
TRACKING GENERATOR	ON
TG FIXED LEVEL	0 dBm
TG VARIABLE LEVEL	OFF
TG TRACKING	ON

(3) Connect the TG OUTPUT to the RF INPUT.

(4) Tune the FREQ/MKRS knob to peak the response on the screen (maximum amplitude).

(5) Reset the VERTICAL SCALE to 10 dB/, SPAN/DIV to MAX SPAN.

(6) Wait for at least one complete sweep, then save the display in Register A (SAVE ENABLE A).

(7) Enable B, C MINUS A mode by pressing DSPL 2.

(8) Turn off the D display and turn on the B display.

(9) Remove the cable from the TG OUTPUT and the RF INPUT, and terminate these connectors in 50 Ω.

(10) Reset the REFERENCE LEVEL to –40 dBm.

(11) Wait for at least one complete sweep, then press PEAK FIND or enable a marker and tune it to the highest peak.

(12) Make a note of the marker amplitude (readout) and 44 dB to it.

(13) Check that the sum of the marker amplitude and 44 dB is ≥100 dB.

Tektronix®
COMMITTED TO EXCELLENCE

MANUAL CHANGE INFORMATION

Date: 4-17-92 **Change Reference:** M76666

Product: See List **Manual Part No:** See List

DESCRIPTION Product Group 2E

INSTRUMENT	MANUAL NUMBER	BEGINNING SERIAL NO.
2710	070-6024-01	B044747
2711	070-8130-01	B010178
2712	070-8130-01	B010990

ELECTRICAL PARTS LIST CHANGE

CHANGE TO:

CIRCUIT NO.	PART NO.	DESCRIPTION
A13	670-9475-04	CKT BOARD ASSY:VR
A13C294	283-5025-00	CAP,FXD,CER,DI:220PF,5%,50V
A13C296	283-5025-00	CAP,FXD,CER,DI:220PF,5%,50V
A13C684	290-5039-00	CAP,FXD:ALUMINUM,10UF,20%,50V
A13L295	108-5005-00	COIL,RF:FXD,560NH,+/-10%
A13R130	321-5010-00	RES,FXD,FILM:221 OHM,1%,0.125W
A13R131	321-5010-00	RES,FXD,FILM:221 OHM,1%,0.125W
A13R132	321-5004-00	RES,FXD,FILM:22.1 OHM,1%,0.125W
A13R438	321-5003-00	RES,FXD,FILM:18.2 OHM,1%,0.125W
A13R530	321-5014-00	RES,FXD,FILM:475 OHM,1%,0.125W
A13R531	321-5000-00	RES,FXD,FILM:10 OHM,1%,0.125W
A13R532	321-5014-00	RES,FXD,FILM:475 OHM,1%,0.125W

ADD:

CIRCUIT NO.	PART NO.	DESCRIPTION
A13R335	321-5011-00	RES,FXD,FILM:274 OHM,1%,0.125W
A13R439	321-5011-00	RES,FXD,FILM:274 OHM,1%,0.125W

Tektronix®
COMMITTED TO EXCELLENCE

MANUAL CHANGE INFORMATION

Date: 4-17-92 **Change Reference:** M76793

Product: See List **Manual Part No:** See List

DESCRIPTION

Product Group 2E

INSTRUMENT	MANUAL NUMBER	BEGINNING SERIAL NO.
2710	070-6024-01	B044723
2711	070-8130-01	B010100
2712	070-8130-01	B010696

ELECTRICAL PARTS LIST CHANGE

CHANGE TO:

CIRCUIT NO.	PART NO.	DESCRIPTION
A23	671-1740-02	CKT BOARD ASSY:RF OPTION 14
A26	671-2013-02	CKT BOARD ASSY:RF OPTION 12

ADD: 253-0176-00 (Pressure Sensitive Tape with sticky foam backing) in locations A23Y311 and A23Y337 on the RF Option 14 circuit board and locations A26Y311 and A26Y337 on the RF Option 12 circuit board.

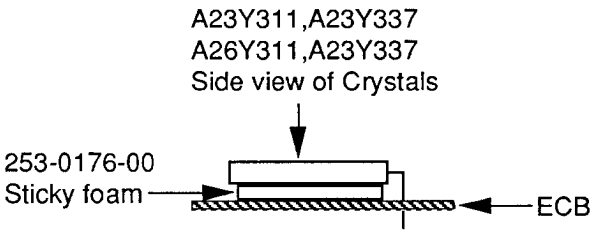

Tektronix®
COMMITTED TO EXCELLENCE

MANUAL CHANGE INFORMATION:

Date: 30-DEC-92 **Change Reference:** M78606

Product: See List **Manual Part No.:** See List

DESCRIPTION **Product Group 2E**

EFFECTIVE FOR SERIAL NUMBERS:

2711 SERVICE	070-8130-01	B010279
2712 SERVICE	070-8130-01	B011274
2714 SERVICE	070-8534-00	B010158

Change Replaceable Electrical Parts to:

REMOVE:

CIRCUIT #	PART NUMBER	DESCRIPTION
A15	621-0083-03	POWER SUPPLY ASSEMBLY
A15A1	671-2122-04	CKT BOARD ASSY:POWER SUPPLY
A15A1R500	321-5049-00	RES,FXD,FILM 1 MEG, 1%
A15A1R501	321-5049-00	RES,FXD,FILM 1 MEG, 1%
A15A1R502	321-5049-00	RES,FXD,FILM 1 MEG, 1%
A15A1R503	321-5049-00	RES,FXD,FILM 1 MEG, 1%
A15A1R504	321-5049-00	RES,FXD,FILM 1 MEG, 1%
A15A1R505	321-5049-00	RES,FXD,FILM 1 MEG, 1%
A15A1R506	321-5049-00	RES,FXD,FILM 1 MEG, 1%
A15A1R507	321-5049-00	RES,FXD,FILM 1 MEG, 1%
A15A1R508	321-5049-00	RES,FXD,FILM 1 MEG, 1%
A15A1R509	321-5049-00	RES,FXD,FILM 1 MEG, 1%

ADD:

CIRCUIT #	PART NUMBER	DESCRIPTION
A15	621-0083-04	POWER SUPPLY ASSEMBLY
A15A1	671-2122-05	CKT BOARD ASSY:POWER SUPPLY
A15A1R500	321-5374-00	RES,FXD,FILM 1 MEG, 1%
A15A1R501	321-5374-00	RES,FXD,FILM 1 MEG, 1%
A15A1R502	321-5374-00	RES,FXD,FILM 1 MEG, 1%
A15A1R503	321-5374-00	RES,FXD,FILM 1 MEG, 1%
A15A1R504	321-5374-00	RES,FXD,FILM 1 MEG, 1%
A15A1R505	321-5374-00	RES,FXD,FILM 1 MEG, 1%
A15A1R506	321-5374-00	RES,FXD,FILM 1 MEG, 1%
A15A1R507	321-5374-00	RES,FXD,FILM 1 MEG, 1%
A15A1R508	321-5374-00	RES,FXD,FILM 1 MEG, 1%
A15A1R509	321-5374-00	RES,FXD,FILM 1 MEG, 1%

Tektronix®
COMMITTED TO EXCELLENCE

MANUAL CHANGE INFORMATION

Dat 04-JAN-93 Change Reference: M69372

Product: See List Manual Part No.: See List

DESCRIPTION Product Group 2E

EFFECTIVE FOR SERIAL NUMBERS:

2710 SERVICE	070-6024-01	B044760
2711 SERVICE	070-8130-01	B010204
2712 SERVICE	070-8130-01	B011034

Change Replaceable Electrical Parts to:

REMOVE:

CIRCUIT #	PART NUMBER	DESCRIPTION
A6	670-9413-01	CKT BOARD ASSY:FRONT PANEL (2710 ONLY)
A6R680	311-2052-00	RES,VAR NONWW:20K OHM, 20%, 0.5W
R480	311-2052-00	RES,VAR NONWW:20K OHM, 20%, 0.5W (2711 AND 2712 ONLY)
A15	621-0074-02	POWER SUPPLY ASSEMBLY (2710 ONLY)
A15	621-0083-01	POWER SUPPLY ASSEMBLY (2711 AND 2712 ONLY)
A15A1	671-2122-03	CIRCUIT BOARD ASSY:POWER SUPPLY
A15A1R5	311-2052-00	RES,VAR NONWW:20K OHM, 20%, 0.5 W
A15A1R6	311-2052-00	RES,VAR NONWW:20K OHM, 20%, 0.5 W
A15A1R7	311-2052-00	RES,VAR NONWW:20K OHM, 20%, 0.5 W
A15A1W2	174-0188-01	CABLE ASSY,RF:50 OHM COAX

ADD:

CIRCUIT #	PART NUMBER	DESCRIPTION
A6	670-9413-02	CKT BOARD ASSY:FRONT PANEL (2710 ONLY)
A6R680	311-2052-01	RES,VAR NONWW:20K OHM, 20%, 0.5W
R480	311-2052-01	RES,VAR NONWW:20K OHM, 20%, 0.5W (2711 AND 2712 ONLY)
A15	621-0074-03	POWER SUPPLY ASSEMBLY (2710 ONLY)
A15	621-0083-02	POWER SUPPLY ASSEMBLY (2711 AND 2712 ONLY)
A15A1	671-2122-04	CIRCUIT BOARD ASSY:POWER SUPPLY
A15A1R5	311-2052-01	RES,VAR NONWW:20K OHM, 20%, 0.5 W
A15A1R6	311-2052-01	RES,VAR NONWW:20K OHM, 20%, 0.5 W
A15A1R7	311-2052-01	RES,VAR NONWW:20K OHM, 20%, 0.5 W
A15A1W2	174-0188-02	CABLE ASSY,RF:50 OHM COAX

Change Replaceable Mechanical Parts to:

REMOVE:

FIG & INDEX #	PART NUMBER	DESCRIPTION
3-176	337-3772-01	POWER SUPPLY SHIELD (2710 ONLY)
3-59	337-3772-01	POWER SUPPLY SHIELD (2711 AND 2712 ONLY)

ADD:

FIG & INDEX #	PART NUMBER	DESCRIPTION
3-176	337-3772-02	POWER SUPPLY SHIELD (2710 ONLY)
3-59	337-3772-02	POWER SUPPLY SHIELD (2711 AND 2712 ONLY)

Tektronix®
COMMITTED TO EXCELLENCE

MANUAL CHANGE INFORMATION:

Date: 26-JAN-93 **Change Reference:** M78892

Product: See List **Manual Part No.:** See List

DESCRIPTION **Product Group 2E**

EFFECTIVE FOR SERIAL NUMBERS:

2711 SERVICE	070-8130-01	B020000 and up
2712 SERVICE	070-8130-01	B020000 and up
2714 SERVICE	070-8534-00	B020000 and up

Change Replaceable Electrical Parts to:

REMOVE:

Circuit No.	PART NUMBER	DESCRIPTION
A15	621-0083-04	POWER SUPPLY
A15A1	671-2122-05	CIRCUIT BOARD ASSY:POWER SUPPLY
A15W3	174-2616-00	CA ASSY,SP,ELEC:9 COND,SHIELDED
A10U120	160-8928-00	IC,DIGITAL CMOS,EPROM;131072 X 8 PRGM
A10U220	160-8927-00	IC,DIGITAL CMOS,EPROM;131072 X 8 PRGM
A10U320	160-8926-00	IC,DIGITAL CMOS,EPROM;131072 X 8 PRGM
A10U420	160-8925-00	IC,DIGITAL CMOS,EPROM;131072 X 8 PRGM
A11U312	160-8924-00	IC,DIGITAL CMOS,EPROM;131072 X 8 PRGM
A11U410	160-8923-00	IC,DIGITAL CMOS,EPROM;131072 X 8 PRGM
A25U312	160-8924-00	IC,DIGITAL CMOS,EPROM;131072 X 8 PRGM
A25U410	160-8923-00	IC,DIGITAL CMOS,EPROM;131072 X 8 PRGM

ADD:

Circuit No.	PART NUMBER	DESCRIPTION
A15	621-0083-05	POWER SUPPLY
A15A1	671-2122-06	CIRCUIT BOARD ASSY:POWER SUPPLY
A15W3	174-2826-00	CA ASSY,RF:SHLD CMPD CPO 12,28 AWG, 15 POS FEMALE
A10U120	160-8928-01	IC,DIGITAL CMOS,EPROM;131072 X 8 PRGM
A10U220	160-8927-01	IC,DIGITAL CMOS,EPROM;131072 X 8 PRGM
A10U320	160-8926-01	IC,DIGITAL CMOS,EPROM;131072 X 8 PRGM
A10U420	160-8925-01	IC,DIGITAL CMOS,EPROM;131072 X 8 PRGM
A11U312	160-8924-01	IC,DIGITAL CMOS,EPROM;131072 X 8 PRGM
A11U410	160-8923-01	IC,DIGITAL CMOS,EPROM;131072 X 8 PRGM
A25U312	160-8924-01	IC,DIGITAL CMOS,EPROM;131072 X 8 PRGM
A25U410	160-8923-01	IC,DIGITAL CMOS,EPROM;131072 X 8 PRGM

Product: See List **Date:** 26-JAN-93 **Change Reference:** M78892

Change Replaceable Mechanical Parts to:

REMOVE:

FIG. & INDEX	PART NUMBER	DESCRIPTION
6-8	070-8532-00	MANUAL TECH:2714 USERS

ADD:

FIG. & INDEX	PART NUMBER	DESCRIPTION
6-8	070-8532-01	MANUAL TECH:2714 USERS

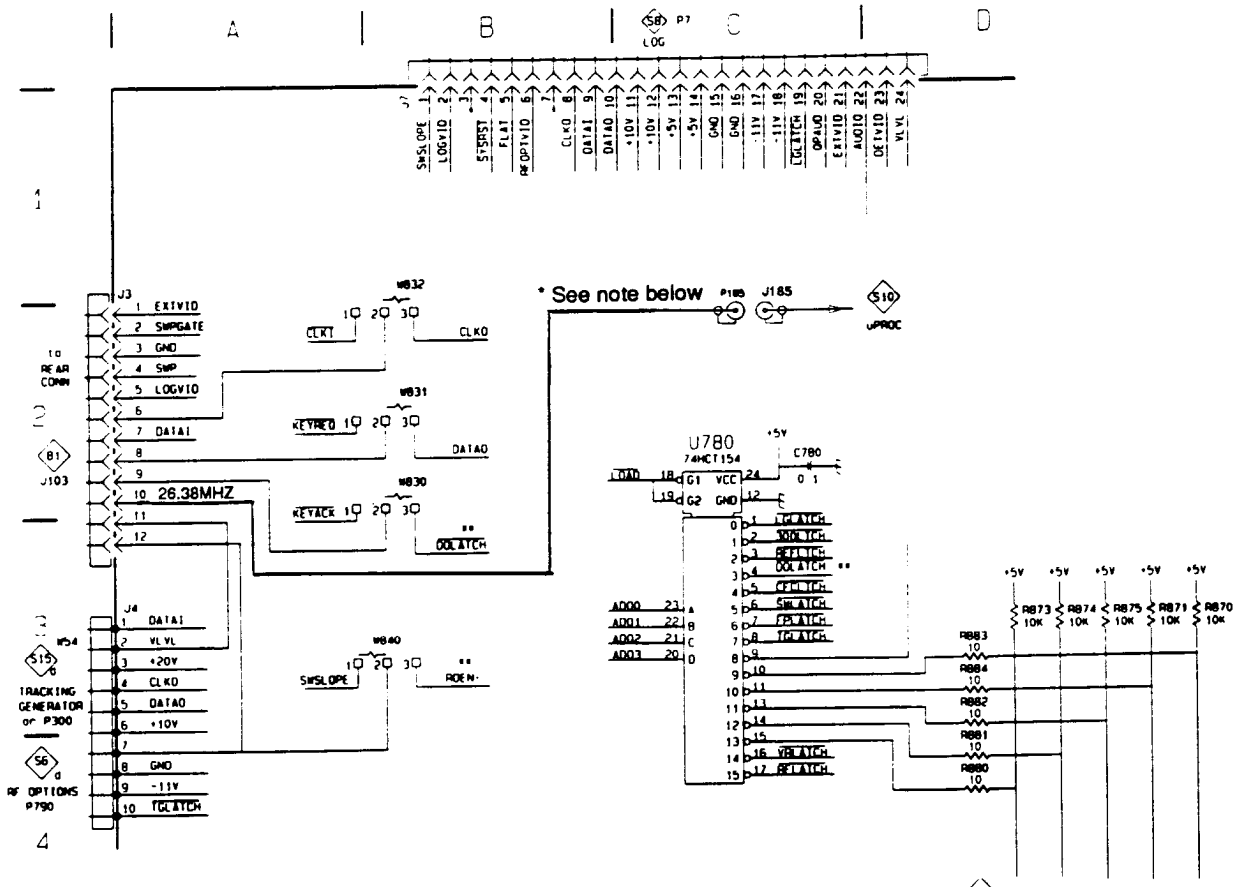

Partial view of modified schematic for the Power supply S14

W832, W831, and W830 were reconfigured. W3 was changed from a 9-pin connector to a 15-pin connector.

Note: Not installed with option 04

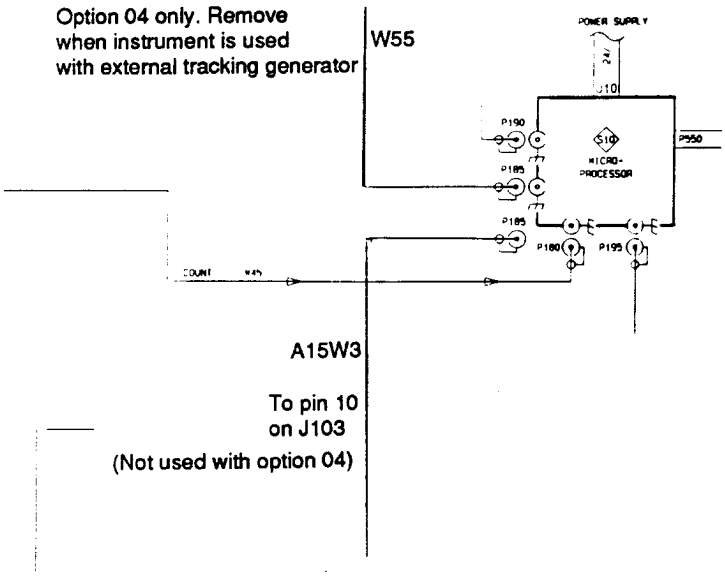

Modifications to the 271X interconnect diagram

REAR PANEL			
J103 AUX SIGNALS	J104 RS232 DTE (MALE)	J104 GPIB	PIN #
EXTVIDEO	CD	DIO1	1
SWPGATE	RXD	DIO2	2
GND	TXD	DIO3	3
SWP	DTR	DIO4	4
LOGVID	SIGNAL GND	EOI	5
CLKO	DSR	DAV	6
DATAI	RTS	NRFD	7
DATAO	CTS	NDAC	8
DOLATCH	RI	IFC	9
26.38MHZ		SRQ	10
VLVL		ATN	11
SWPPSLOPE		GND	12
		DIO5	13
		DIO6	14
		DIO7	15
		DIO8	16
		REN	17
		GND	18
		GND	19
		GND	20
		GND	21
		GND	22
		GND	23
		GND	24
			25

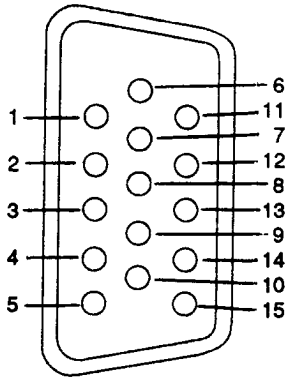

J103 showing modified pins

Tektronix®
COMMITTED TO EXCELLENCE

MANUAL CHANGE INFORMATION:

Date 17-MAR-93 Change Reference: M79006

Product: See List Manual Part No.: 070-8130-01

DESCRIPTION Product Group 2E

EFFECTIVE FOR SERIAL NUMBERS:

2711 SERVICE	B010387 and up
2712 SERVICE	B011473 and up

Change Replaceable Electrical Parts to:

REMOVE:

CIRCUIT #	PART NUMBER	DESCRIPTION
A24	119-3889-01	TRACKING GENERATOR ASSY
A24A3	671-1543-00	ISO AMPLIFIER CKT BOARD ASSY
A24A3C320	283-5003-00	CAP:0.01UF
A24A3C141	283-5005-00	CAP:4PF
A24A3C240	283-5005-00	CAP:4PF
A24A3C241	283-5005-00	CAP:4PF
A24A3C311	283-5004-00	CAP:0.1UF
A24A3C410	283-5004-00	CAP:0.1UF
A24A3C510	283-5004-00	CAP:0.1UF
A24A3C511	283-5001-00	CAP:100PF
A24A3C512	283-5001-00	CAP:100PF
A24A3C513	283-5001-00	CAP:100PF
A24A3C520	283-5004-00	CAP:0.1UF
A24A3CR130	152-5066-00	DIODE,PIN
A24A3CR131	152-5066-00	DIODE,PIN
A24A3CR410	152-5004-00	DIODE BAV99
A24A3CR510	152-0962-00	DIODE,SCHOTTKY
A24A3CR530	152-5011-00	DIODE,ZENER 6.2V
A24A3L130	108-5013-00	COIL,RF
A24A3L150	108-5013-00	COIL,RF
A24A3R140	321-5043-00	RES,FXD,FILM:47.5 OHM
A24A3R141	321-5043-00	RES,FXD,FILM:47.5 OHM
A24A3R314	321-5018-00	RES,FXD,FILM:1.0K OHM
A24A3R315	321-5018-00	RES,FXD,FILM:1.0K OHM
A24A3R316	321-5000-00	RES,FXD,FILM:10 OHM
A24A3R320	321-5048-00	RES,FXD,FILM:332K OHM
A24A3R410	321-5030-00	RES,FXD,FILM:10.0K OHM
A24A3R411	321-5000-00	RES,FXD,FILM:10 OHM
A24A3R412	321-5000-00	RES,FXD,FILM:10 OHM
A24A3R420	321-5013-00	RES,FXD,FILM:392 OHM

REMOVE: (continued)

A24A3R421	311-5037-00	RES,VAR,NONWW:TRMR 100 OHM
A24A3R510	321-5036-00	RES,FXD,FILM:33.2K OHM
A24A3R511	321-5006-00	RES,FXD,FILM:100 OHM
A24A3R520	321-5020-00	RES,FXD,FILM:1.5K OHM
A24A3R521	321-5008-00	RES,FXD,FILM:150 OHM
A24A3R530	321-5011-00	RES,FXD,FILM:274 OHM
A24A3R600	321-5002-00	RES,FXD,FILM:15 OHM
A24A3R601	321-5012-00	RES,FXD,FILM:332 OHM
A24A3R602	321-5012-00	RES,FXD,FILM:332 OHM
A24A3U310	156-5017-01	IC OP-AMP

ADD:

CIRCUIT #	PART NUMBER	DESCRIPTION
A24	119-3889-01	TRACKING GENERATOR ASSY
A24A3	671-1543-01	ISO AMPLIFIER CKT BOARD ASSY
A24A3R140	321-5051-00	RES,FXD,FILM:0.0 OHM
A24A3R141	321-5051-00	RES,FXD,FILM:0.0 OHM
A24A3R142	321-5051-00	RES,FXD,FILM:0.0 OHM
A24A3R600	321-5000-00	RES,FXD,FILM:10 OHM
A24A3R601	321-5014-00	RES,FXD,FILM:475 OHM
A24A3R602	321-5014-00	RES,FXD,FILM:475 OHM

Note: The revised schematic and circuit board illustration are included at the end of this insert.

Change Replaceable Mechanical Parts to:

REMOVE:

FIG. & INDEX	PART NUMBER	DESCRIPTION
6-2	119-4285-00	COVER ASSY,TOP

ADD:

FIG. & INDEX	PART NUMBER	DESCRIPTION
6-2	119-4285-01	COVER ASSY,TOP

The Isolation amplifier adjustment is no longer required. Remove or change the following paragraphs, pages or illustrations that pertain to the Isolation amplifier as follows.

Remove step 2 on page 4–21 through 4–23.

Remove both illustrations (Figures 4–13 and 4–14) on page 4–22.

On page 7–61, in the right column, remove the word **leveling** in the first and second paragraph.

On page 7–63, under the heading AMPLIFIER CHAIN, change the first sentence to read as follows: The module consists of three amplifiers, an unbalanced power divider, and three fixed attenuators.

On page 7–63, In the last paragraph in the first column, change the last sentence to read as follows: The output of the second amplifier has an amplitude of +8 dB to +11 dBm.

On page 7–63, in the second column, delete the first two paragraphs and the last paragraph.

On page 7–64, replace Figure 7–29 with the following revised figure.

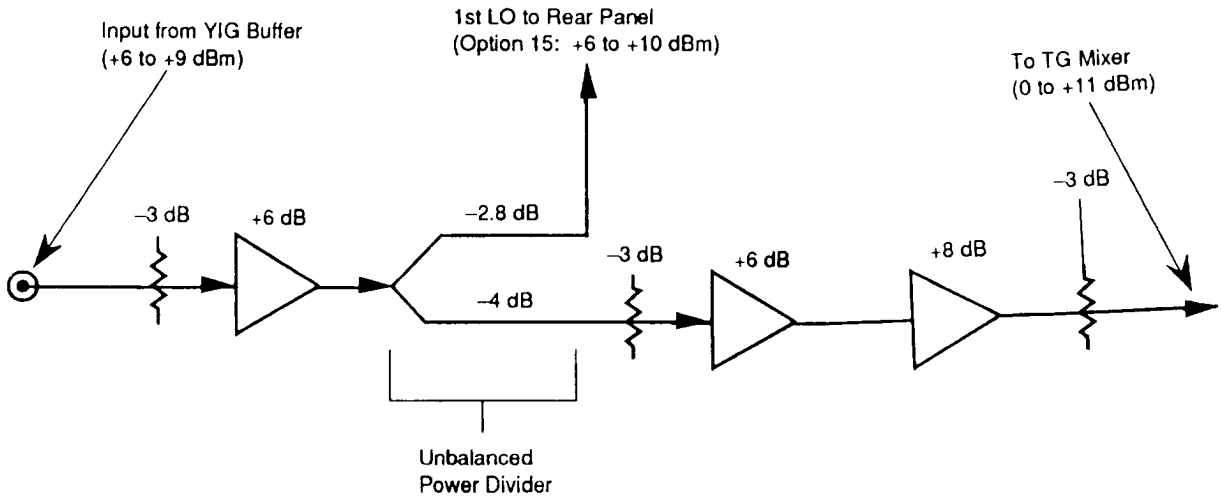

Figure 7–29. Isolation Amplifiers block diagram.

Tektronix®
COMMITTED TO EXCELLENCE

MANUAL CHANGE INFORMATION:

Date 20-MAY-93 **Change Reference:** M79751

Product: See List **Manual Part No.:** See List

DESCRIPTION **Product Group 2E**

EFFECTIVE FOR SERIAL NUMBERS:

2711 SERVICE	070-8130-01	B020486
2712 SERVICE	070-8130-01	B021757 – B021781
2714 SERVICE	070-8534-00	B020495 – B020570

REMOVE:

CIRCUIT #	PART NUMBER	DESCRIPTION
A12A1R241	325-0410-00	14.3K OHM,1%,0.3W,TC=3.1PPM
A12A1R242	325-0410-00	14.3K OHM,1%,0.3W,TC=3.1PPM
A12A1R922	325-0410-00	14.3K OHM,1%,0.3W,TC=3.1PPM

ADD:

CIRCUIT #	PART NUMBER	DESCRIPTION
A12A1R241	321-0306-09	15.0K OHM,1%,0.125W,TC=T9
A12A1R242	321-0306-09	15.0K OHM,1%,0.125W,TC=T9
A12A1R922	321-0306-09	15.0K OHM,1%,0.125W,TC=T9

EFFECTIVE FOR SERIAL NUMBERS:

2711 SERVICE	070-8130-01	B020487 and up
2712 SERVICE	070-8130-01	B021782 and up
2714 SERVICE	070-8534-00	B020571 and up

REMOVE:

CIRCUIT #	PART NUMBER	DESCRIPTION
A12A1R241	321-0306-09	15.0K OHM,1%,0.125W,TC=T9
A12A1R242	321-0306-09	15.0K OHM,1%,0.125W,TC=T9
A12A1R922	321-0306-09	15.0K OHM,1%,0.125W,TC=T9

ADD:

CIRCUIT #	PART NUMBER	DESCRIPTION
A12A1R241	325-0410-00	14.3K OHM,1%,0.3W,TC=3.1PPM
A12A1R242	325-0410-00	14.3K OHM,1%,0.3W,TC=3.1PPM
A12A1R922	325-0410-00	14.3K OHM,1%,0.3W,TC=3.1PPM